DIST	COUNTY	ROUTE	KILOMETER POST TOTAL PROJECT	SHEET No.	TOTAL SHEETS
04	SF	80	13.2/13.9	135 S1R1	1204

REGISTERED ELECTRICAL ENGINEER 6/12/08 DATE

PLANS APPROVAL DATE

REGISTERED PROFESSIONAL ENGINEER FADI WALIEDDINE No. 11465 Exp. 12/31/2009 ELECTRICAL STATE OF CALIFORNIA

PB AMERICAS, Inc.
A Parsons Brinckerhoff Company
303 Second St., Suite 700N
San Francisco, CA 94107-1317

The State of California or its officers or agents shall not be responsible for the accuracy or completeness of electronic copies of this plan sheet.

Caltrans now has a web site! To get to the web site, go to http://www.dot.ca.gov

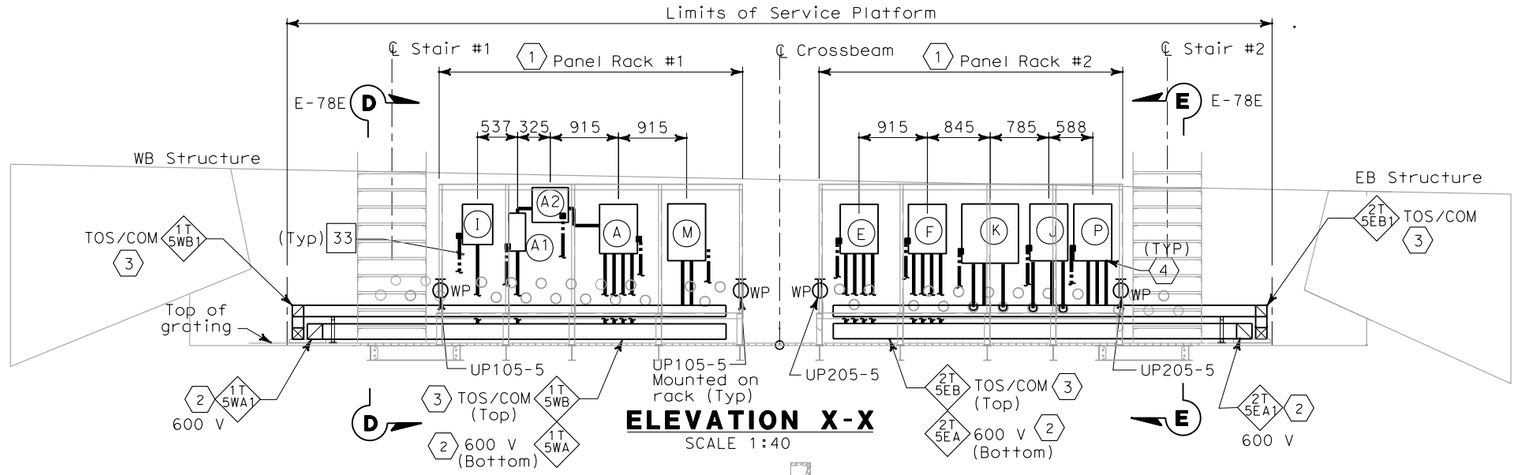

ELEVATION X-X
SCALE 1:40

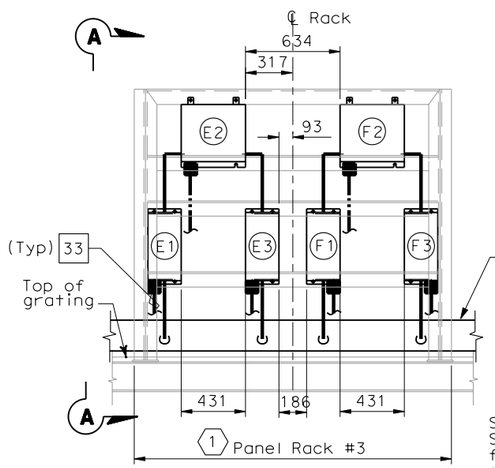

ELEVATION Z-Z
SCALE 1:20

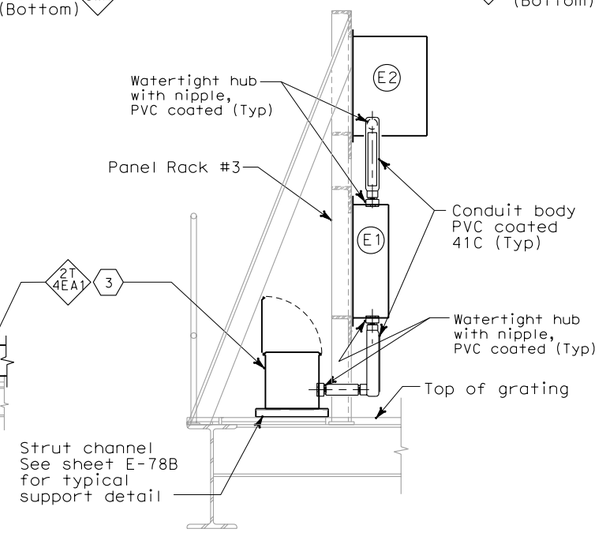

SECTION A-A
NO SCALE
PLATFORM NO. 5 AS SHOWN
(TYPICAL FOR PLATFORMS NOs. 4, 6, 7 AND 8)

SHEET NOTES:

1. For electrical panel support details, see AS-sheets, AS-13, AS-13A and AS-13B.
2. 600 V Stainless Steel Wireway, Nema 4X with cover.
3. Low level Stainless Steel Wireway, Nema 4X with cover.
4. Empty conduits shall be capped for future use.

NOTES:

1. Equipment dimensions mounted at panel racks shall be verified by Contractor prior to purchase and installation. Dimensions for equipment location are approximate and may be adjusted to suit field condition.
2. (SP) Denotes spare pipe sleeve for 78 mm conduit. Contractor to provide plug at each ends

WESTBOUND	CONDUIT NUMBERS
(A) Utility Panel, UP-105	4/223D 4/224A 4/033 4/034
(A1) Main Breaker for (A2)	4/223A 4/223B
(A2) 15 kVA Transformer	4/223B 4/223C
(M) TOS/COM-5WA Pull Box	4/225A 4/226A
(I) Navigation Relay Cabinet NAP-5	4/029

EASTBOUND	CONDUIT NUMBERS
(E) Utility Panel, UP-205	5/223D 5/224A 5/026 5/027
(E1) Main Breaker for (E2)	5/223A 5/223B
(E2) 15 kVA Transformer	5/223B 5/223C
(E3) Feeder Circuit Breaker for (E)	5/223C 5/223E
(F) Lighting Panel LP-220	5/225D 5/029 5/030 5/031
(F1) Main Breaker for (F2)	5/225A 5/225B
(F2) 15 kVA Transformer	5/225B 5/225C
(F3) Feeder Circuit Breaker for (F)	5/225C 5/225E
(J) Telephone Terminal Box #TEL-5	1 5/228 5/235A 5/235 1
(K) Communication Terminal Box #COM-5	5/226 5/234A 5/227
(P) TOS/COM-5EA Pull Box	5/226A 5/227A 5/233A

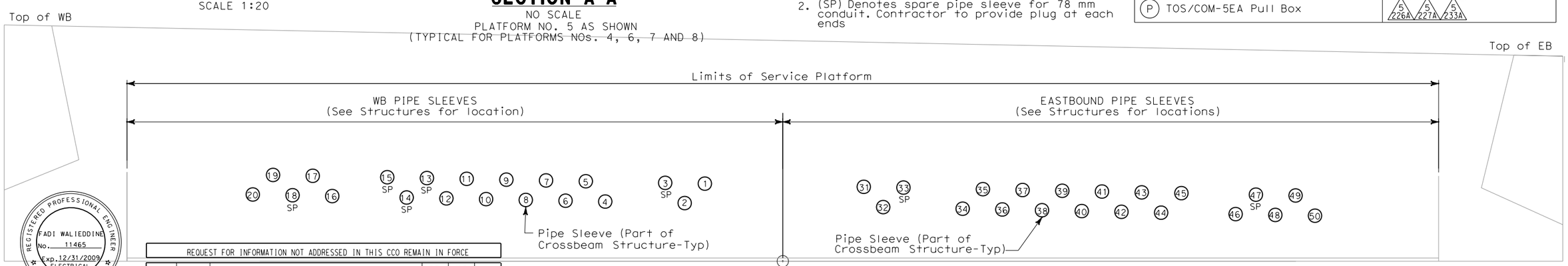

PIPE SLEEVE ELEVATION Y-Y (SEE SHEET E-115)
SCALE 1:20

REGISTERED PROFESSIONAL ENGINEER FADI WALIEDDINE No. 11465 Exp. 12/31/2009 ELECTRICAL STATE OF CALIFORNIA

REQUEST FOR INFORMATION NOT ADDRESSED IN THIS CCO REMAIN IN FORCE

MARK	DATE	DESCRIPTIONS	BY	CH'D	CCO#
1	06/25/09	SERVICE PLATFORM ELECTRICAL CHANGES	RR RY	RG FW	55
0	03/30/09	SERVICE PLATFORM ELECTRICAL CHANGES	RR MP	RG FW	55

REVISIONS

FOR REVISION ONLY

1

CONTRACT CHANGE ORDER NO._____
SHEET_____ OF_____

THIS PLAN IS ACCURATE FOR ELECTRICAL WORK ONLY.

DETAILS
SAS SUPERSTRUCTURE ROADWAY WESTBOUND PLATFORM 5 ARRANGEMENT
SCALE AS NOTED

ALL DIMENSIONS ARE IN MILLIMETERS UNLESS OTHERWISE SHOWN.

E-72A

DESIGN OVERSIGHT: BEHZAD GOLEMOHAMMADI

CALCULATED/DESIGNED BY | CHECKED BY | DATE | REVISED BY | DATE REVISED

STATE OF CALIFORNIA - DEPARTMENT OF TRANSPORTATION

Caltrans

LAST REVISION 00-00-00 | DATE PLOTTED => 6/25/2009 TIME PLOTTED => 3:22:22 PM

FOR REDUCED PLANS ORIGINAL SCALE IS IN MILLIMETERS 0 20 40 60 80

DGN FILE =>T:\13103\MS\pse\SAS Struc\CCO\SAS CCO55\2009-05-25_Issued for Submittal\04-0120f1_0135S01R01.dgn
USERNAME =>garciar

CU 04251 | EA 0120F1