DIST	COUNTY	ROUTE	KILOMETER POST TOTAL PROJECT	SHEET NO	TOTAL SHEETS
04	SF	80	13.2/13.9	82 S1R1	1204

REQUEST FOR INFORMATION NOT ADDRESSED IN THIS CCO REMAIN IN FORCE

MARK	DATE	DESCRIPTIONS	BY	CH'D	CCO#
1	03/30/09	SERVICE PLATFORM ELECTRICAL CHANGES	GB	MSO	55
0	06/12/08	SERVICE PLATFORM ELECTRICAL CHANGES	GB	MSO	55

REVISIONS

Caltrans Metric

Gregory Benkovich 6/12/08
REGISTERED STRUCTURAL ENGINEER DATE

REGISTERED PROFESSIONAL ENGINEER Gregory Benkovich No. C40518 Exp. 3/31/09 CIVIL STATE OF CALIFORNIA

PLANS APPROVAL DATE

PARSONS BRINCKERHOFF QUADE & DOUGLAS, INC.
303 SECOND STREET, SUITE 700 N
SAN FRANCISCO, CA 94107

The State of California or its officers or agents shall not be responsible for the accuracy or completeness of electronic copies of this plan sheet.

Caltrans now has a web site! To get to the web site, go to http://www.dot.ca.gov

CONTRACT CHANGE ORDER NO. _____
SHEET _____ OF _____

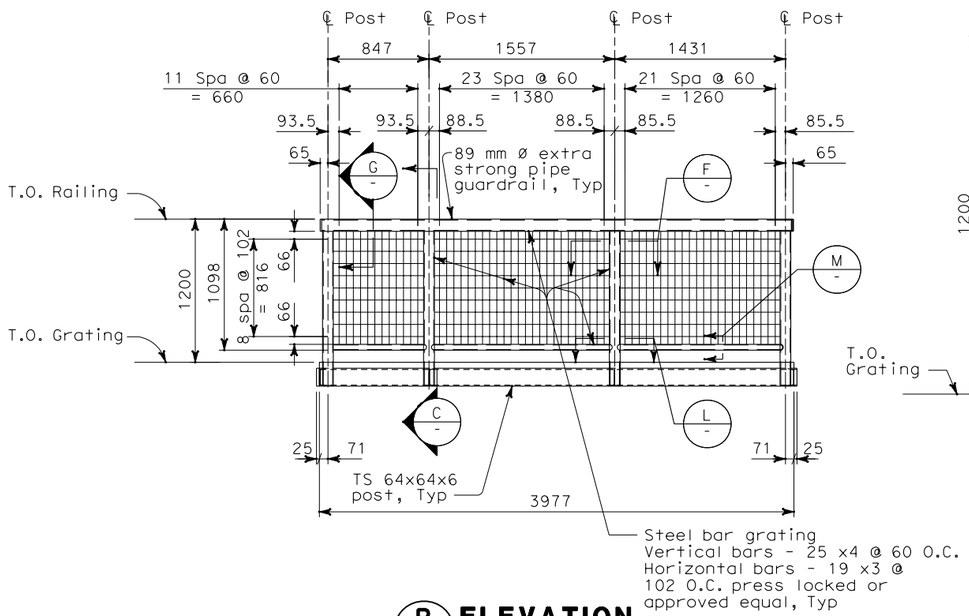

B / AS-12 ELEVATION
SCALE: 1:25

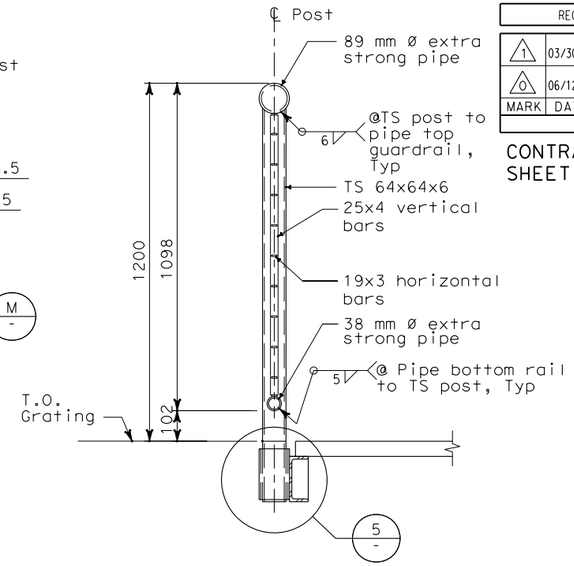

C / AS-12 SECTION
SCALE: 1:10

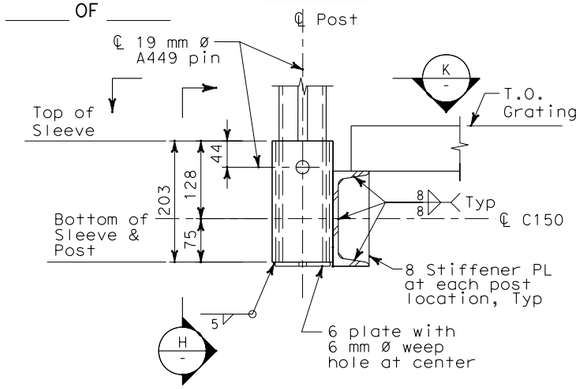

5 / - DETAIL
SCALE: 1:5

NOTES:

1. The contractor shall verify all controlling field dimensions before ordering or fabricating any material.
2. For structural notes, see sheet AS-1.
3. For framing member sizes see sheet No. AS-12.

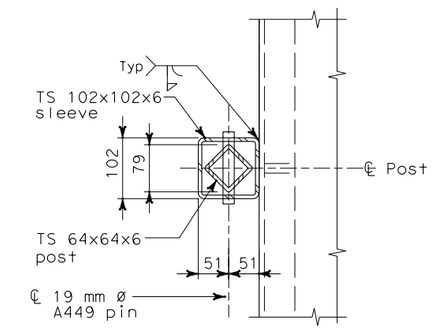

K / - SECTION
SCALE: 1:5

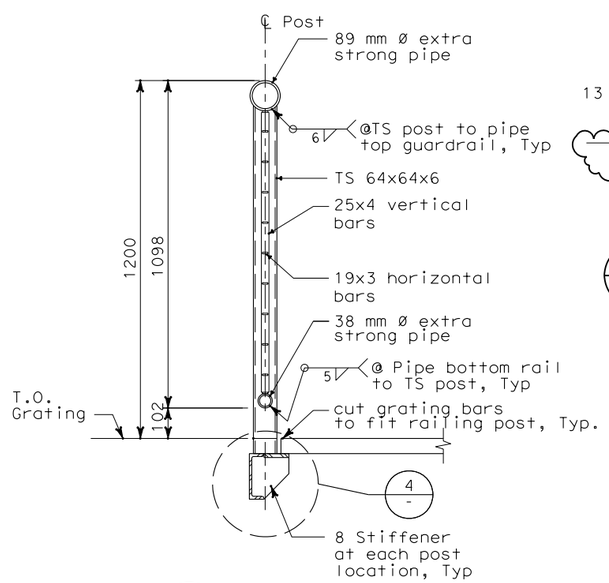

D / AS-12 SECTION
SCALE: 1:10

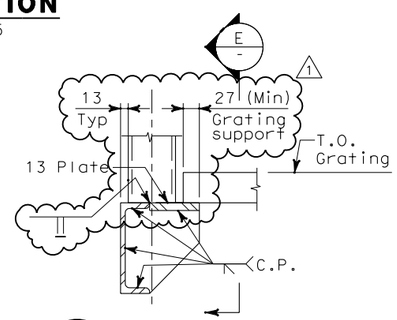

4 / - DETAIL
SCALE: 1:5

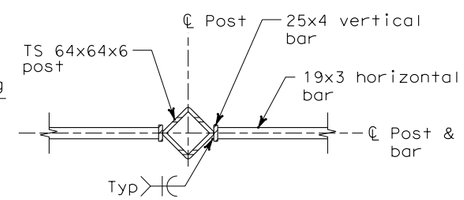

F / AS-12 SECTION
SCALE: 1:5

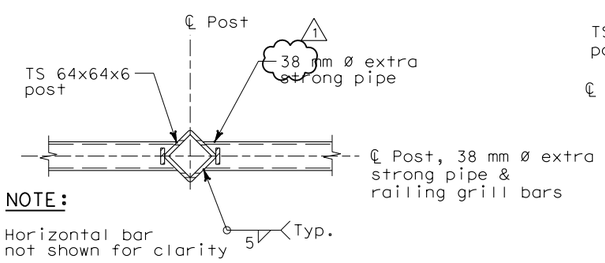

NOTE:
Horizontal bar not shown for clarity

L / - SECTION
SCALE: 1:5

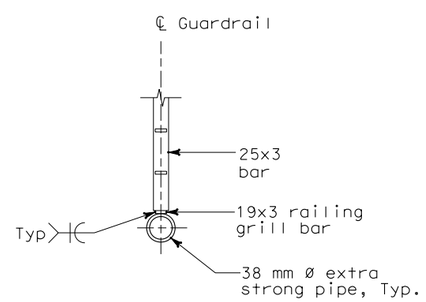

M / - SECTION
SCALE: 1:5

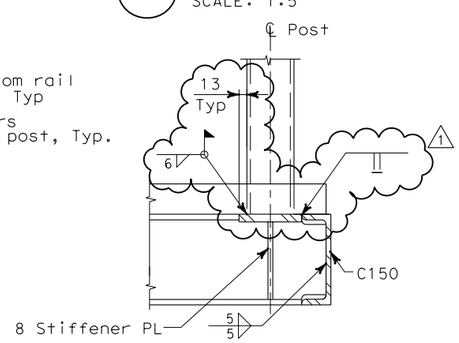

E / - SECTION
SCALE: 1:5

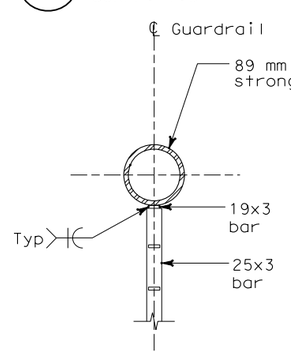

G / AS-12 SECTION
SCALE: 1:5

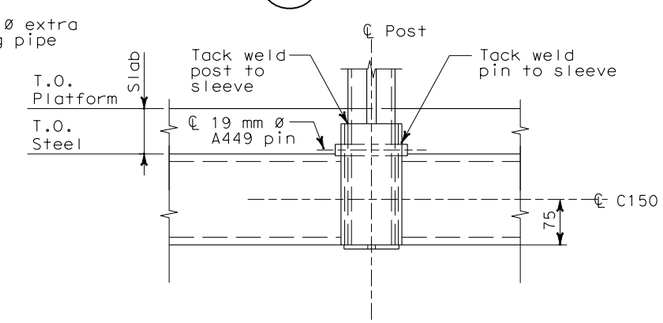

H / - SECTION
SCALE: 1:5

ALL DIMENSIONS ARE IN MILLIMETERS UNLESS OTHERWISE SHOWN

Bob Zandipour, DESIGN OVERSIGHT	DESIGN	BY E. Lucas	CHECKED M. S. Owyang
4-14-04, SIGN OFF DATE	LAYOUT	BY L. Reyes	CHECKED M. S. Owyang
	QUANTITIES	BY I. Horton	CHECKED P. McNamee

PREPARED FOR THE STATE OF CALIFORNIA DEPARTMENT OF TRANSPORTATION

Brady Nadell, PROJECT ENGINEER

BRIDGE NO. 34-0006
KILOMETER POST 13.2/13.9

SAS SUPERSTRUCTURE
PULL BOX SUPPORT PLAN, SECTIONS AND DETAILS

AS-12A

ORIGINAL SCALE IN MILLIMETERS FOR REDUCED PLANS 0 10 20 30 40 50 60 70 80 90 100

CU 04251
EA 0120F1

DISREGARD PRINTS BEARING EARLIER REVISION DATES

REVISION DATES (PRELIMINARY STAGE ONLY) SHEET OF

DGN FILE => T:\13103\MS\pse\SAS Struc\CCO\SAS CCO55\04-0120f1_0082S01R01.dgn
USERNAME => garciar

DATE PLOTTED => 4/1/2009 TIME PLOTTED => 7:40:10 AM