DIST	COUNTY	ROUTE	KILOMETER POST TOTAL PROJECT	SHEET No	TOTAL SHEETS
04	SF	80	13.2/13.9	135 S1	1204

REGISTERED ELECTRICAL ENGINEER — DATE 6/12/08

REGISTERED PROFESSIONAL ENGINEER — FADI WALIEDDINE No. 11465 Exp. 12/31/2009 ELECTRICAL — STATE OF CALIFORNIA

PLANS APPROVAL DATE

PB AMERICAS, Inc.
A Parsons Brinckerhoff Company
303 Second St., Suite 700N
San Francisco, CA 94107-1317

The State of California or its officers or agents shall not be responsible for the accuracy or completeness of electronic copies of this plan sheet.

Caltrans now has a web site! To get to the web site, go to http://www.dot.ca.gov

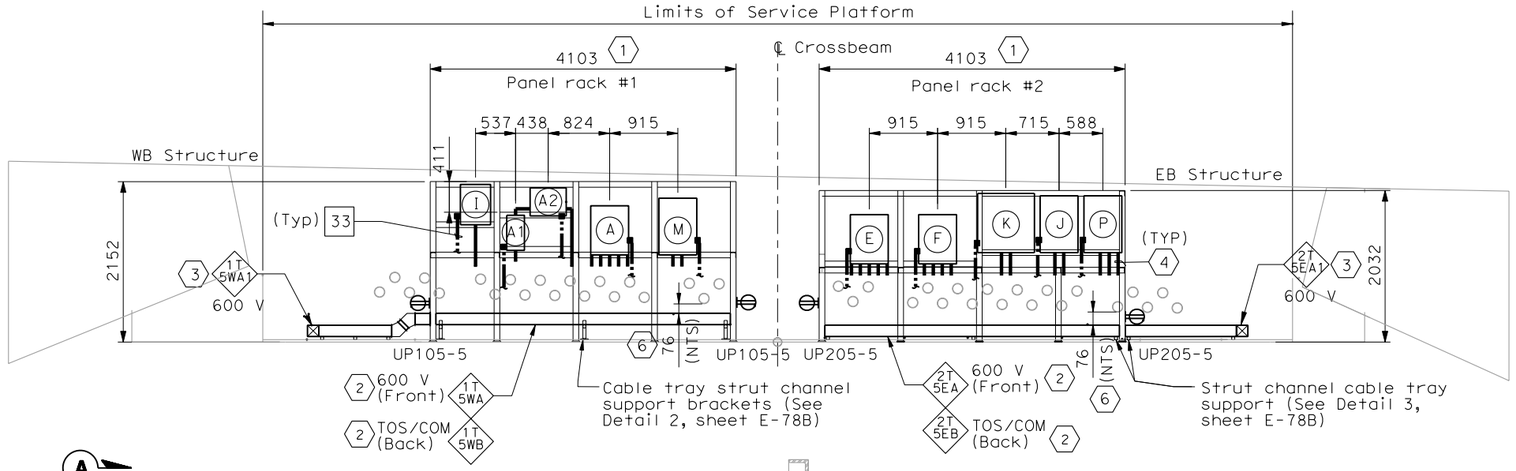

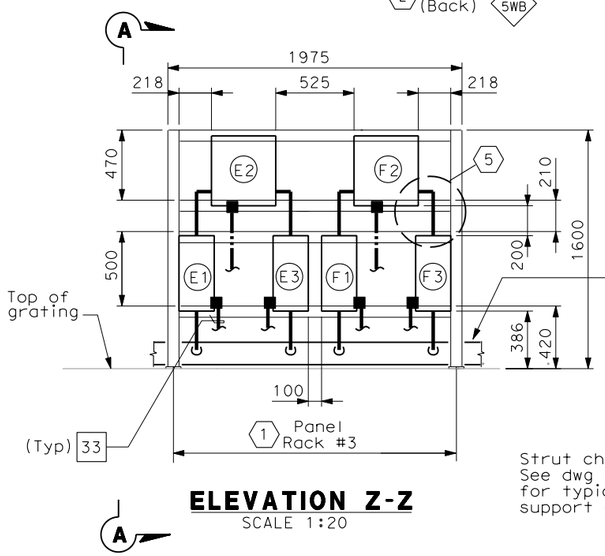

ELEVATION Z-Z
SCALE 1:20

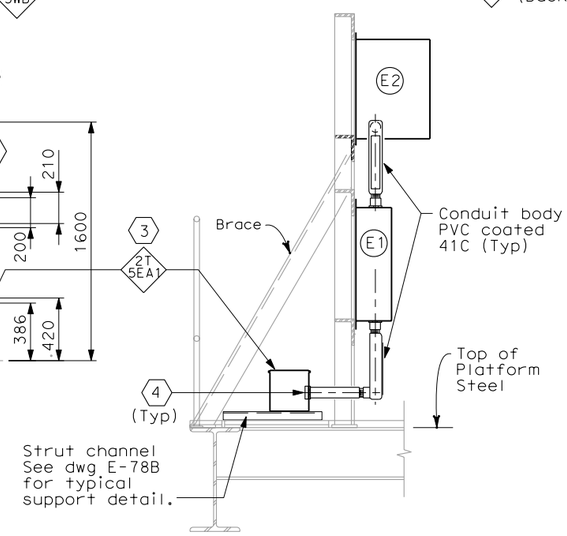

SECTION A-A
(NTS)

SHEET NOTES:

1. For electrical panel support details, see AS-sheets, AS-13, AS-13A and AS-13B.
2. Stainless steel cable trays shall be solid bottom without cover located below panel racks #1 and #2.
3. 600V Stainless Steel, Wireway, Nema 4X with cover.
4. To prevent moisture from entering the enclosures, contractor to seal both ends of conduit with an approved type of sealing compound after all cables are pulled. Empty conduit shall be capped for future use.
5. See Detail 1 on Sheet E-71A.
6. Dimension from top of cable tray to bottom of lowest conduit penetration.

NOTES:

1. Equipment dimensions mounted at panel racks shall be verified by Contractor prior to purchase and installation.
2. The Contractor to provide fabricated tray cover over the conduits from cabinets. See sheet E-115 for locations.
3. (SP) Denotes spare pipe sleeve for 78 mm conduit. Contractor to provide plug at each ends.

WESTBOUND	CONDUIT NUMBERS
(A) Utility Panel, UP-105	4/223D 4/224A 4/033 4/034 4/035
(A1) Main Breaker for (A2)	4/223A 4/223B
(A2) 15 kVA Transformer	4/223B 4/223C
(M) TOS/COM-5WA Pull Box	4/225A 4/226A
(I) Navigation Relay Cabinet NAP-5	4/029

EASTBOUND	CONDUIT NUMBERS
(E) Utility Panel, UP-205	5/223D 5/224A 5/026 5/027 5/028
(E1) Main Breaker for (E2)	5/223A 5/223B
(E2) 15 kVA Transformer	5/223B 5/223C
(E3) Feeder Circuit Breaker for (E)	5/223C 5/223E
(F) Lighting Panel LP-220	5/225D 5/029 5/030 5/031
(F1) Main Breaker for (F2)	5/225A 5/225B
(F2) 15 kVA Transformer	5/225B 5/225C
(F3) Feeder Circuit Breaker for (F)	5/225C 5/225E
(J) Telephone Terminal Box #TEL-5	5/228A 5/235A
(K) Communication Terminal Box #COM-5	5/234A 5/229A
(P) TOS/COM-5EA Pull Box	5/226A 5/227A 5/233A

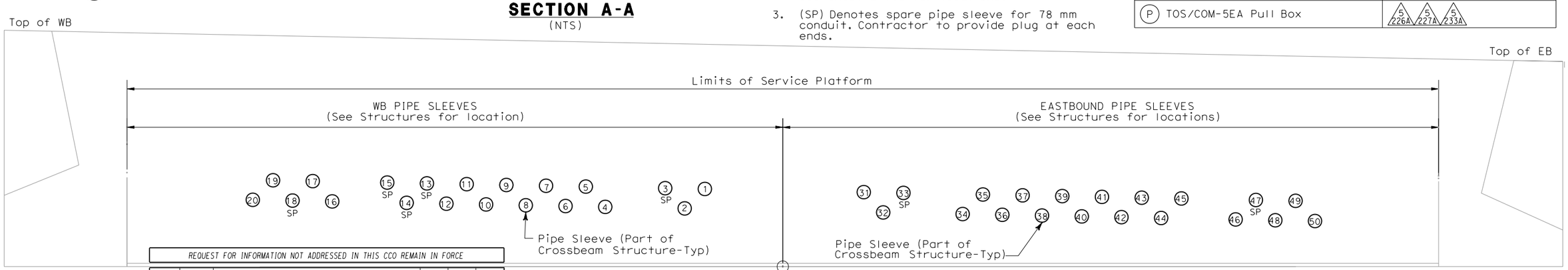

PIPE SLEEVE ELEVATION Y-Y
SCALE 1:20

REQUEST FOR INFORMATION NOT ADDRESSED IN THIS CCO REMAIN IN FORCE

MARK	DATE	DESCRIPTIONS	BY	CH'D	CCO#
0	12/22/08	SERVICE PLATFORM ELECTRICAL CHANGES	RR MP	RG FW	55

REVISIONS

CONTRACT CHANGE ORDER NO._____
SHEET_____ OF _____

DETAILS
SAS SUPERSTRUCTURE ROADWAY WESTBOUND PLATFORM 5 ARRANGEMENT
SCALE AS NOTED

E-72A

THIS PLAN IS ACCURATE FOR ELECTRICAL WORK ONLY.

ALL DIMENSIONS ARE IN MILLIMETERS UNLESS OTHERWISE SHOWN.

DESIGN OVERSIGHT: BEHZAD GOLEMOHAMMADI

CALCULATED/DESIGNED BY | CHECKED BY | DATE | REVISED BY | DATE REVISED

STATE OF CALIFORNIA - DEPARTMENT OF TRANSPORTATION

Caltrans

FOR REDUCED PLANS ORIGINAL SCALE IS IN MILLIMETERS 0 20 40 60 80

DGN FILE =>T:\13103\MS\pse\SAS Struc\CCO\SAS CCO55\2008-12-22_Issued for Submittal\04-0120f1_0135S01.dgn
USERNAME =>garciar

CU 04251 | EA 0120F1

LAST REVISION 00-00-00 | DATE PLOTTED => 12/23/2008 TIME PLOTTED => 8:46:15 AM