DIST	COUNTY	ROUTE	KILOMETER POST TOTAL PROJECT	SHEET No	TOTAL SHEETS
04	SF	80	13.2/13.9	73R1	1204

REGISTERED CIVIL ENGINEER 12/19/02

12-6-04
PLANS APPROVAL DATE

REGISTERED PROFESSIONAL ENGINEER Mee Shing Owyang No. 24960 Exp. 12/31/05 CIVIL STATE OF CALIFORNIA

The State of California or its officers or agents shall not be responsible for the accuracy or completeness of electronic copies of this plan sheet.

Parsons Brinckerhoff Quade & Douglas, Inc.
303 Second Street, Suite 700N
San Francisco, CA 94107

Caltrans now has a web site! To get to the web site, go to: http://www.dot.ca.gov

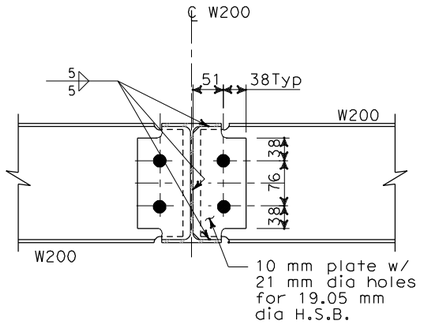

SECTION A AS-2
SCALE: 1:5

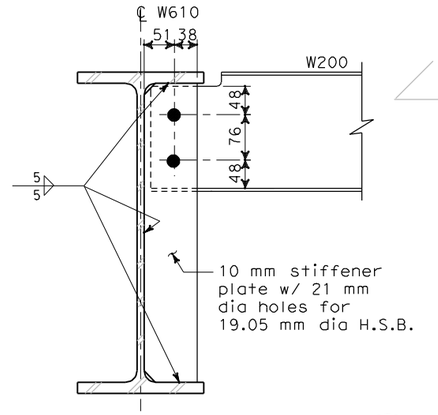

SECTION B AS-2
SCALE: 1:5

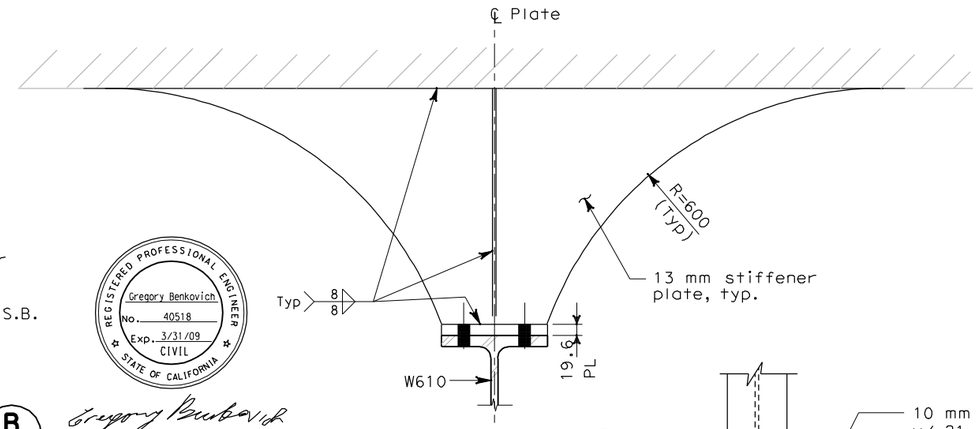

SECTION C -
SCALE: 1:5

REGISTERED PROFESSIONAL ENGINEER Gregory Benkovich No. 40518 Exp. 3/31/09 CIVIL STATE OF CALIFORNIA

Gregory Benkovich
FOR REVISION ONLY
1

REQUEST FOR INFORMATION NOT ADDRESSED IN THIS CCO REMAIN IN FORCE					
1	12/22/08	SERVICE PLATFORM ELECTRICAL CHANGES	GB	MSO	55
MARK	DATE	DESCRIPTIONS	BY	CH'D	CCO#
REVISIONS					

CONTRACT CHANGE ORDER NO. _____
SHEET _____ OF _____

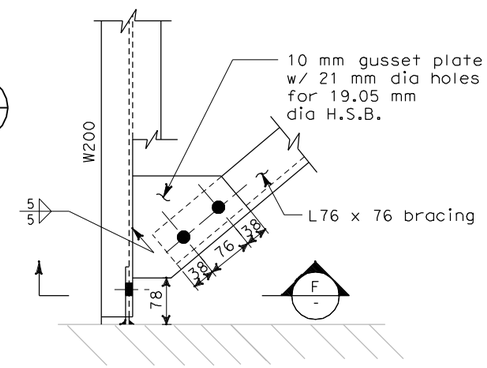

DETAIL I AS-2
SCALE: 1:5

NOTES:

1. For structural notes, see sheet AS-1.
2. The contractor shall verify all controlling field dimensions before ordering or fabricating any materials.

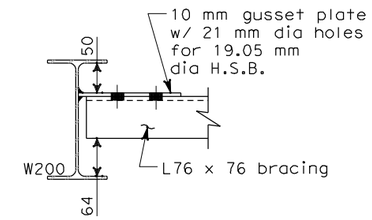

SECTION F -
SCALE: 1:5

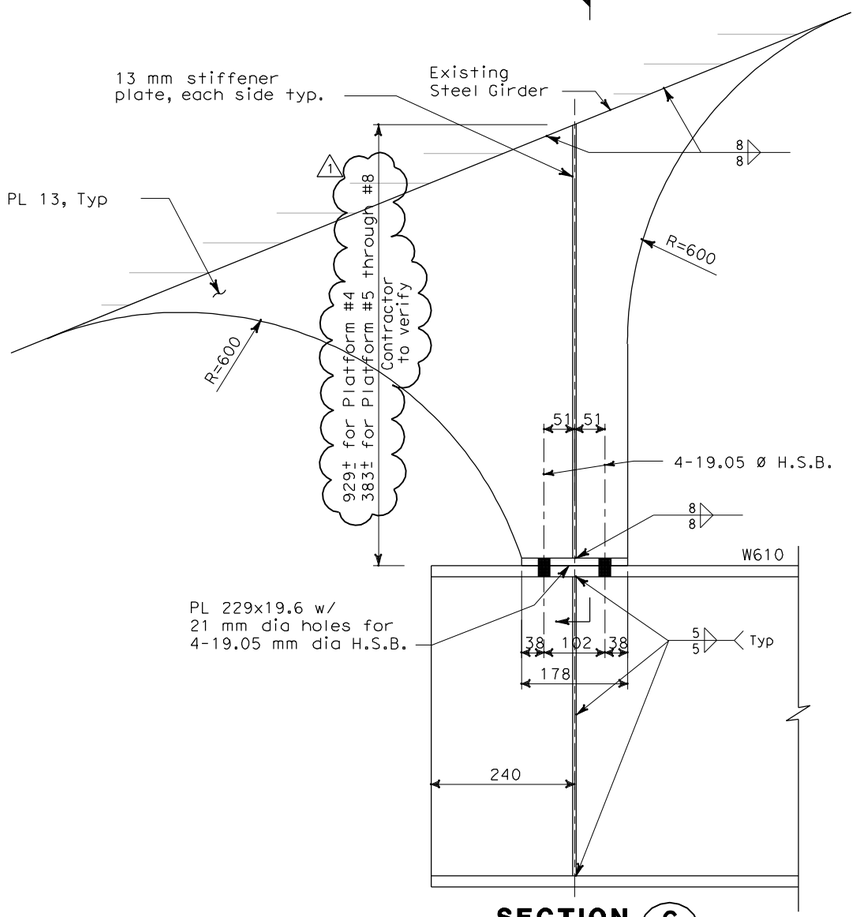

SECTION C AS-2
SCALE: 1:5

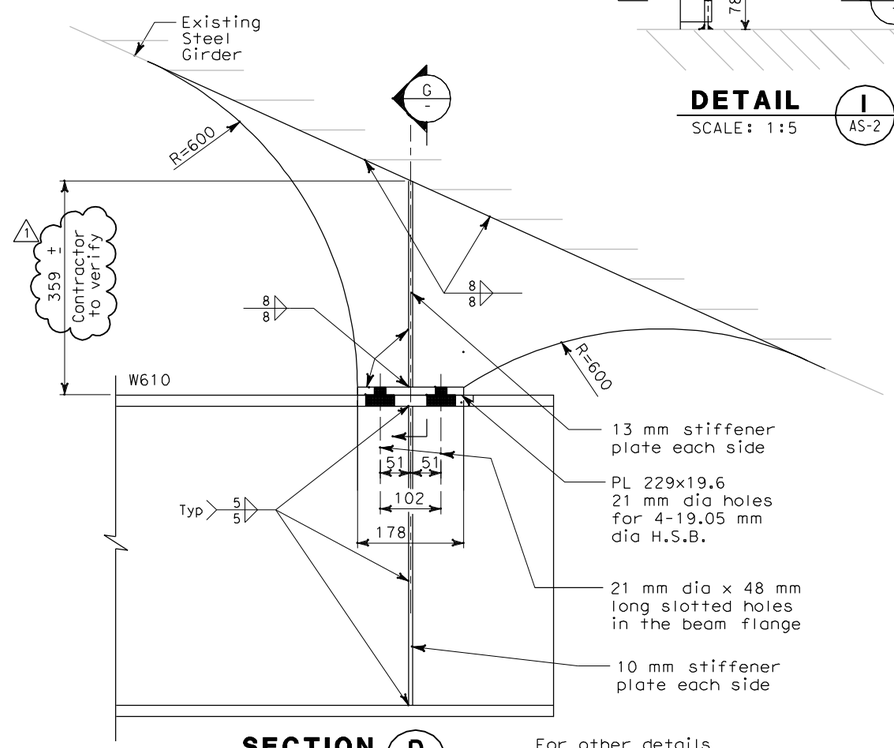

SECTION D AS-2
SCALE: 1:5

For other details not shown, see section C

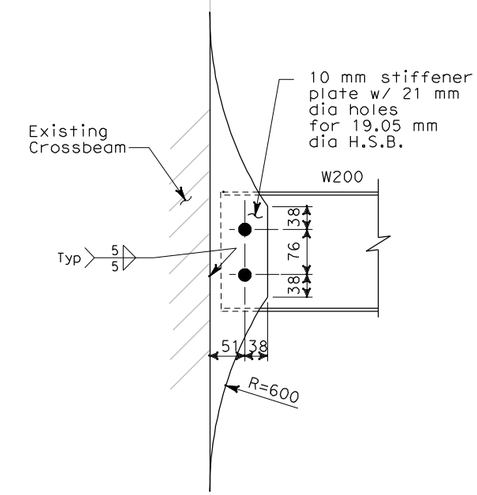

SECTION E AS-2
SCALE: 1:5

ALL DIMENSIONS ARE IN MILLIMETERS UNLESS OTHERWISE SHOWN

BoB Zandipour
DESIGN OVERSIGHT

SIGN OFF DATE

	BY	CHECKED
DESIGN	A. Van Felten	M.S. Owyang
LAYOUT	A. Van Felten	M.S. Owyang
QUANTITIES	M.S. Owyang	R. Parrino

PREPARED FOR THE STATE OF CALIFORNIA DEPARTMENT OF TRANSPORTATION

Brady Nadell
PROJECT ENGINEER

BRIDGE NO. 34-0006
KILOMETER POST 13.2/13.9

SAS SUPERSTRUCTURE

SERVICE PLATFORM FRAMING DETAILS

AS-3

DESIGN DETAIL SHEET (METRIC) (REV. 3/1/98)

ORIGINAL SCALE IN MILLIMETERS FOR REDUCED PLANS 0 10 20 30 40 50 60 70 80 90 100

CU 04251
EA 0120F1

DISREGARD PRINTS BEARING EARLIER REVISION DATES

REVISION DATES (PRELIMINARY STAGE ONLY) SHEET OF

DGN FILE => T:\13103\MS\pse\SAS Struc\CCO\SAS CCO55\2008-12-22_Issued for Submittal\04-0120f1_0073R01.dgn
USERNAME => llorico

DATE PLOTTED => 12/22/2008 TIME PLOTTED => 8:30:46 AM

$FREQUEST