DIST	COUNTY	ROUTE	KILOMETER POST TOTAL PROJECT	SHEET No	TOTAL SHEETS
04	SF	80	13.2/13.9	136 S1	1204

REGISTERED ELECTRICAL ENGINEER 6/12/08 DATE

PLANS APPROVAL DATE

REGISTERED PROFESSIONAL ENGINEER FADI WALIEDDINE No. 11465 Exp. 12/31/2009 ELECTRICAL STATE OF CALIFORNIA

PB AMERICAS, Inc.
A Parsons Brinckerhoff Company
303 Second St., Suite 700N
San Francisco, CA 94107-1317

The State of California or its officers or agents shall not be responsible for the accuracy or completeness of electronic copies of this plan sheet.

Caltrans now has a web site! To get to the web site, go to http://www.dot.ca.gov

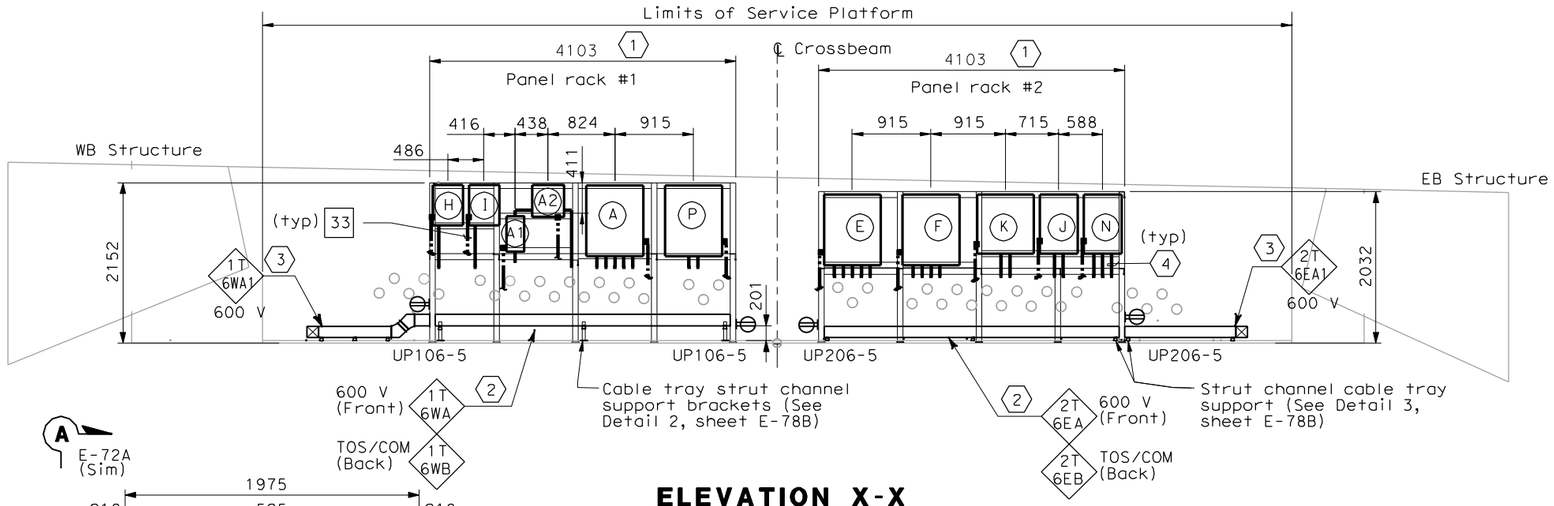

A E-72A (Sim)

ELEVATION X-X

SCALE 1:40

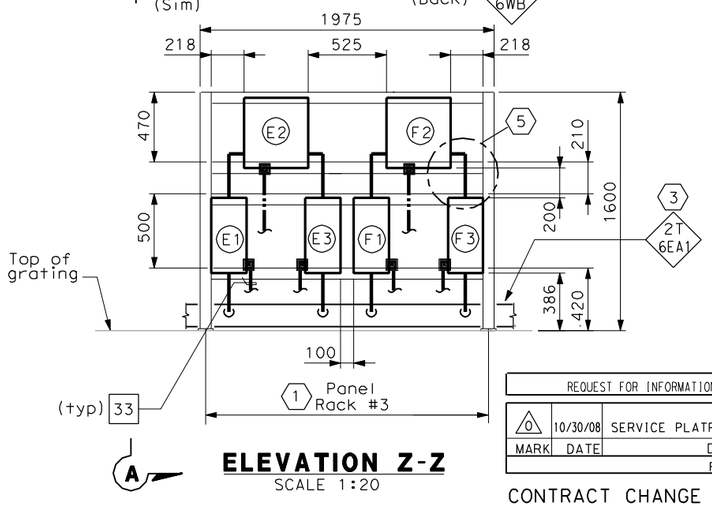

A

ELEVATION Z-Z

SCALE 1:20

SHEET NOTES:

1. For electrical panel support details, see AS-sheets, AS-13, AS-13A, AS-13B.
2. Cable trays shall be without cover located below panel racks #1 and #2.
3. 600 V Stainless steel wireway with cover.
4. To prevent moisture from entering the enclosures, contractor to seal the end of conduit with an approved type of sealing compound after all cables are pulled. Empty conduit shall be capped for future use.
5. See Detail 1 on Sheet E-71A.

NOTES:

1. Equipment dimensions mounted at panel racks shall be verified by Contractor prior to purchase and installation.
2. The Contractor to provide fabricated tray cover over the conduits from cabinets. See sheet E-116 for locations.
3. (SP) Denotes spare pipe sleeve for 78 mm conduit. Contractor to provide plug at each ends.

WESTBOUND	CONDUIT NUMBERS
(A) Utility Panel, UP-106	4/243D 4/244A 4/036 4/037 4/038
(A1) Main Breaker for (A2)	4/243A 4/243B
(A2) 15 kVA Transformer	4/243B 4/243C
(P) TOS/COM-6WA Pull Box	4/245A 4/246A
(I) Navigation Relay Cabinet NAP-6W	4/040
EASTBOUND	**CONDUIT NUMBERS**
(E) Utility Panel, UP-206	5/243D 5/244A 5/051 5/052 5/053
(E1) Main Breaker for (E2)	5/243A 5/243B
(E2) 15 kVA Transformer	5/243B 5/243C
(E3) Feeder Breaker for (E)	5/243C 5/243E
(F) Lighting Panel LP-221	5/241D 5/054 5/055 5/056
(F1) Main Breaker for (F2)	5/241A 5/241B
(F2) 15 kVA Transformer	5/241B 5/241C
(F3) Feeder Breaker for (F)	5/241C 5/241E
(J) Telephone Terminal Box #TEL-6	5/250A 5/238A
(K) Communication Terminal Box #COM-6	5/251A 5/246A
(N) TOS/COM-6EA Pull Box	5/247A 5/236A 5/237A
(H) Navigation Relay Cabinet NAP-6E	5/245A

REQUEST FOR INFORMATION NOT ADDRESSED IN THIS CCO REMAIN IN FORCE					
0	10/30/08	SERVICE PLATFORM ELECTRICAL CHANGES	RR MP	RG FW	55
MARK	DATE	DESCRIPTIONS	BY	CH'D	CCO#
REVISIONS					

CONTRACT CHANGE ORDER NO._____
SHEET_____ OF _____

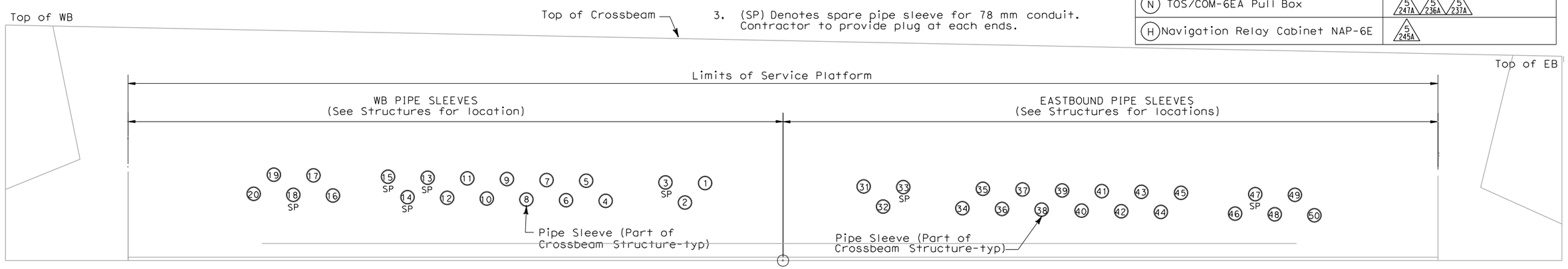

PIPE SLEEVE ELEVATION Y-Y

SCALE 1:20

DETAILS
SAS SUPERSTRUCTURE ROADWAY WESTBOUND PLATFORM 6 ARRANGEMENT

SCALE AS NOTED

E-73A

THIS PLAN IS ACCURATE FOR ELECTRICAL WORK ONLY.

ALL DIMENSIONS ARE IN MILLIMETERS UNLESS OTHERWISE SHOWN.

FOR REDUCED PLANS ORIGINAL SCALE IS IN MILLIMETERS 0 20 40 60 80

DGN FILE =>T:\13103\MS\pse\SAS Struc\CCO\SAS CC055\2008-10-10_Issued for Submittal\04-0120f1_0136S01.dgn
USERNAME =>llorico

CU 04251 EA 0120F1

DESIGN OVERSIGHT: BEHZAD GOLEMOHAMMADI

CALCULATED/DESIGNED BY | CHECKED BY | DATE | REVISED BY | DATE REVISED

STATE OF CALIFORNIA - DEPARTMENT OF TRANSPORTATION

LAST REVISION 00-00-00 | DATE PLOTTED => 10/29/2008 | TIME PLOTTED => 4:00:35 PM