| DIST | COUNTY | ROUTE | KILOMETER POST TOTAL PROJECT | SHEET No | TOTAL SHEETS |
|---|---|---|---|---|---|
| 04 | SF | 80 | 13.2/13.9 | 83S3 | 1204 |

Caltrans Metric

Gregory Benkovich 6/12/08
REGISTERED CIVIL ENGINEER

PLANS APPROVAL DATE

REGISTERED PROFESSIONAL ENGINEER Gregory Benkovich No. 40518 Exp. 3/31/09 CIVIL STATE OF CALIFORNIA

*The State of California or its officers or agents shall not be responsible for the accuracy or completeness of electronic copies of this plan sheet.*

PB AMERICAS, Inc.
303 Second Street, Suite 700N
San Francisco, CA 94107

*Caltrans now has a web site! To get to the web site, go to: http://www.dot.ca.gov*

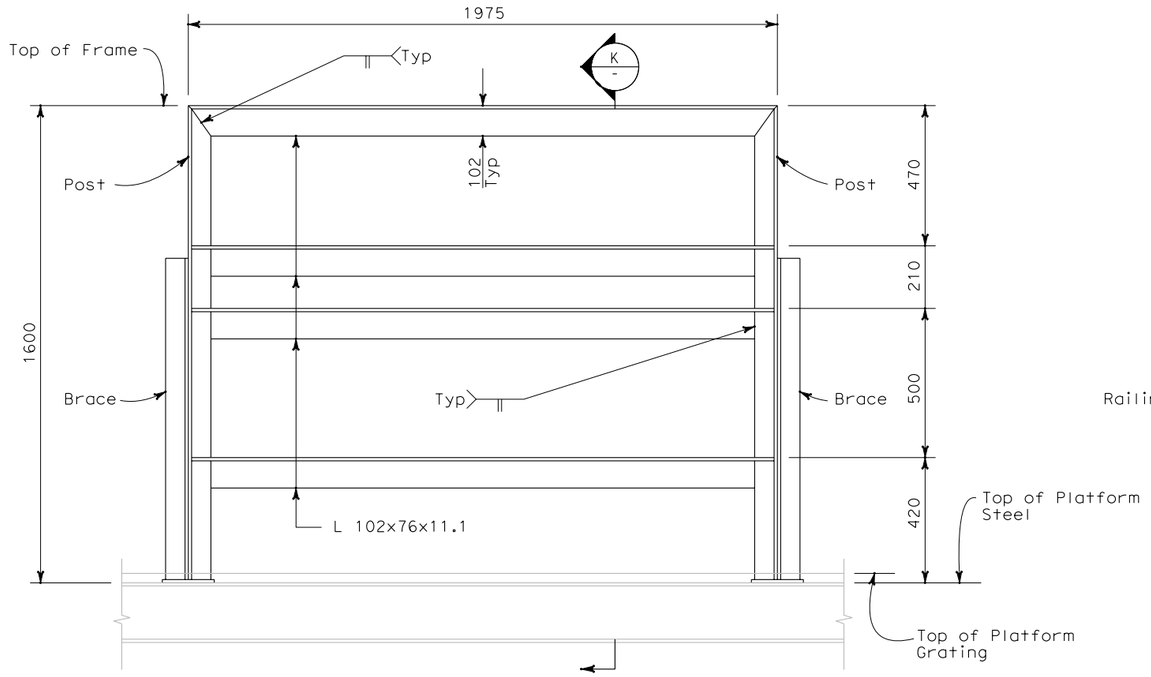


H AS-13 **SECTION**
NOT TO SCALE

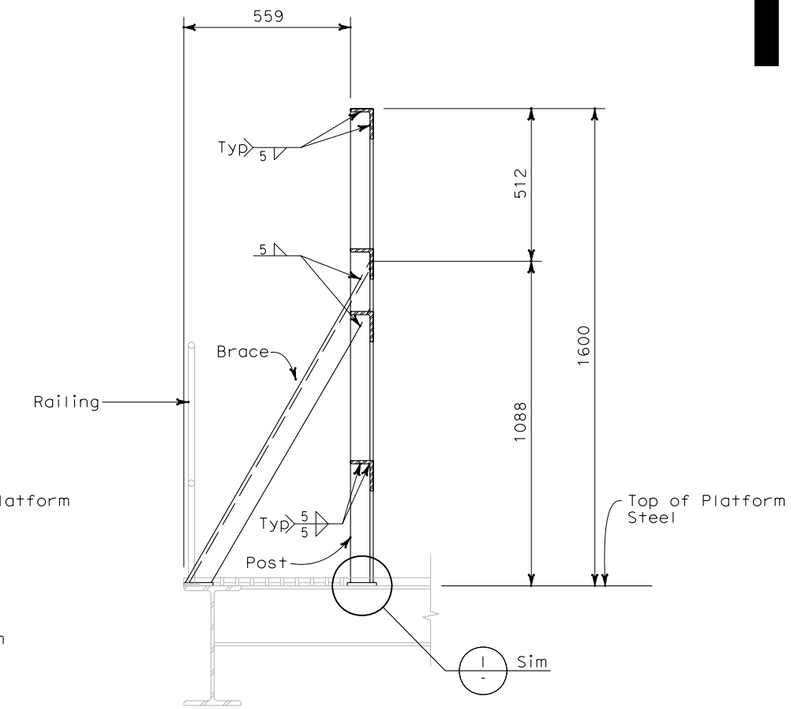


K AS-13 **SECTION**
NOT TO SCALE

## NOTES:

1. The contractor shall verify all controlling field dimensions before ordering or fabricating any material.
2. For structural notes, see sheet AS-1.
3. Unless otherwise noted, all framing elements are L76x76x13.

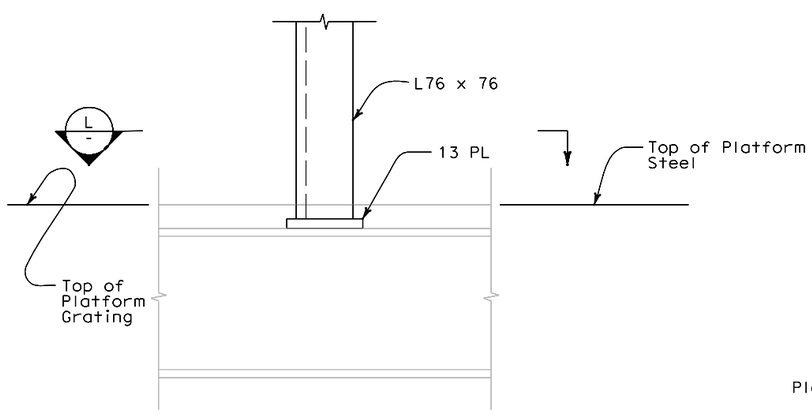


I - **DETAIL**
NOT TO SCALE

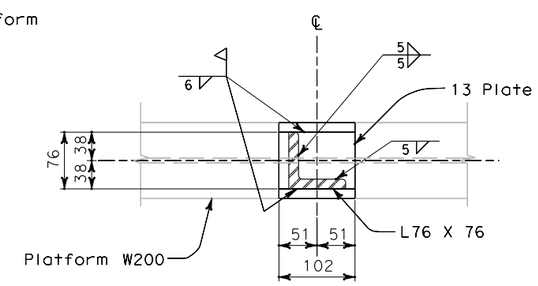


L - **SECTION**
NOT TO SCALE

| REQUEST FOR INFORMATION NOT ADDRESSED IN THIS CCO REMAIN IN FORCE | | | | | |
|---|---|---|---|---|---|
| 0 | 06/12/08 | SERVICE PLATFORM ELECTRICAL CHANGES | GB | MSO | 55 |
| MARK | DATE | DESCRIPTIONS | BY | CH'D | CCO# |
| REVISIONS | | | | | |

CONTRACT CHANGE ORDER NO._____
SHEET _____ OF _____

ALL DIMENSIONS ARE IN MILLIMETERS UNLESS OTHERWISE SHOWN

Bob Zandipour
DESIGN OVERSIGHT

SIGN OFF DATE

| | | | |
|---|---|---|---|
| DESIGN | BY G. Benkovich | CHECKED M. S. Owyang | |
| DETAILS | BY L. Reyes | CHECKED M. S. Owyang | |
| QUANTITIES | BY | CHECKED | |

**PREPARED FOR THE STATE OF CALIFORNIA DEPARTMENT OF TRANSPORTATION**

PROJECT ENGINEER

BRIDGE NO. 34-0006
KILOMETER POST 13.2/13.9

# SAS SUPERSTRUCTURE

## ELECTRICAL PANEL SUPPORT SECTIONS SHEET 3

AS-13C

DISREGARD PRINTS BEARING EARLIER REVISION DATES

REVISION DATES (PRELIMINARY STAGE ONLY) SHEET OF

DESIGN DETAIL SHEET (METRIC) (REV. 3/1/98)

ORIGINAL SCALE IN MILLIMETERS FOR REDUCED PLANS 0 10 20 30 40 50 60 70 80 90 100

CU 04251
EA 0120F1

FILE => T:\13103\MS\pse\SAS Struc\CCO\SAS CCO55\04-0120f1_0083S03.dgn

$FREQUEST

USERNAME => garciar DATE PLOTTED => 6/12/2008 TIME PLOTTED => 5:21:23 PM