| DIST | COUNTY | ROUTE | KILOMETER POST TOTAL PROJECT | SHEET No | TOTAL SHEETS |
|---|---|---|---|---|---|
| 04 | SF | 80 | 13.2/13.9 | 82S1 | 1204 |

REQUEST FOR INFORMATION NOT ADDRESSED IN THIS CCO REMAIN IN FORCE

| MARK | DATE | DESCRIPTIONS | BY | CH'D | CCO# |
|---|---|---|---|---|---|
| 0 | 06/12/08 | SERVICE PLATFORM ELECTRICAL CHANGES | GB | MSO | 55 |

REVISIONS

CONTRACT CHANGE ORDER NO. _____
SHEET _____ OF _____

Caltrans Metric

Gregory Benkovich 6/12/08
REGISTERED STRUCTURAL ENGINEER DATE

REGISTERED PROFESSIONAL ENGINEER Gregory Benkovich No. C40518 Exp. 3/31/09 CIVIL STATE OF CALIFORNIA

PLANS APPROVAL DATE

PARSONS BRINCKERHOFF QUADE & DOUGLAS, INC.
303 SECOND STREET, SUITE 700 N
SAN FRANCISCO, CA 94107

*The State of California or its officers or agents shall not be responsible for the accuracy or completeness of electronic copies of this plan sheet.*

*Caltrans now has a web site! To get to the web site, go to http://www.dot.ca.gov*

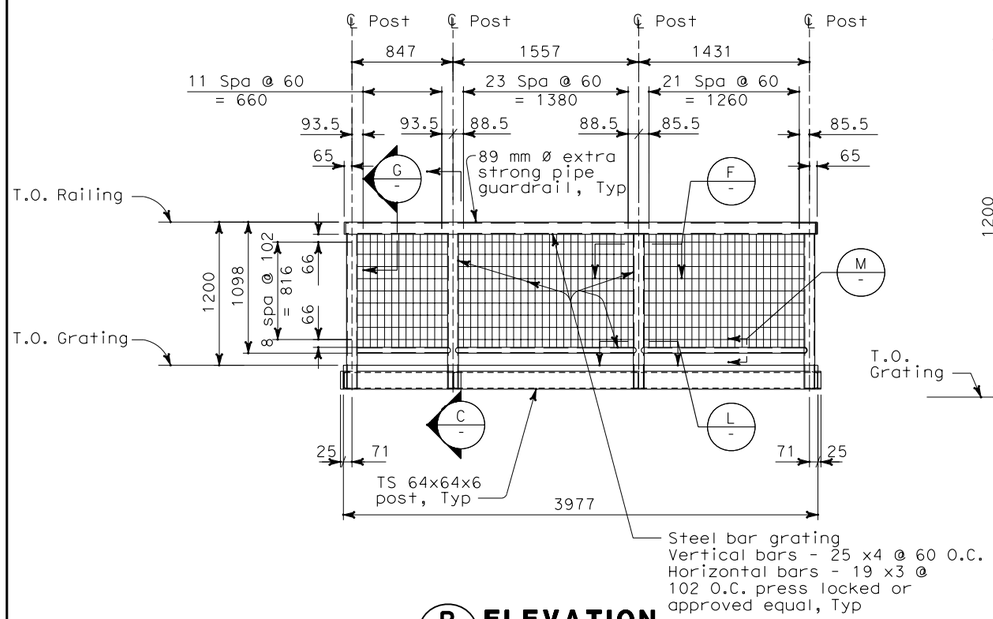


**B / AS-12 ELEVATION**
SCALE: 1:25

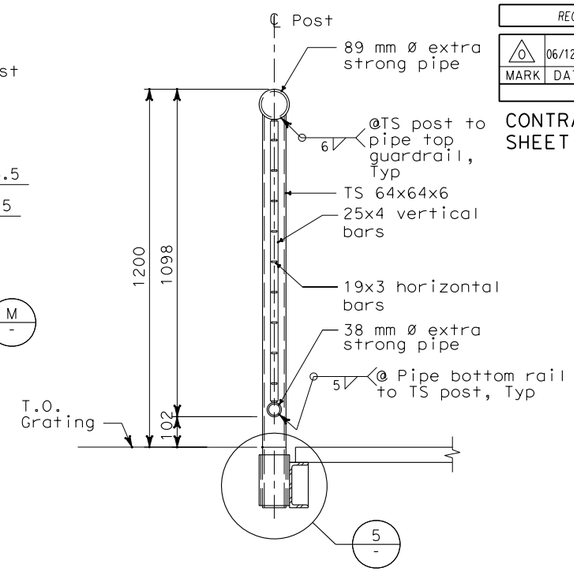


**C / AS-12 SECTION**
SCALE: 1:10

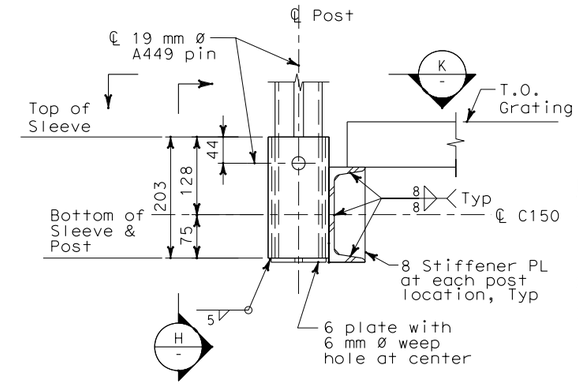


**5 / - DETAIL**
SCALE: 1:5

NOTES:

1. The contractor shall verify all controlling field dimensions before ordering or fabricating any material.
2. For structural notes, see sheet AS-1.
3. For framing member sizes see sheet No. AS-12.

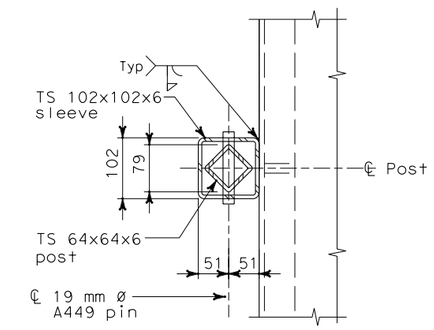


**K / - SECTION**
SCALE: 1:5

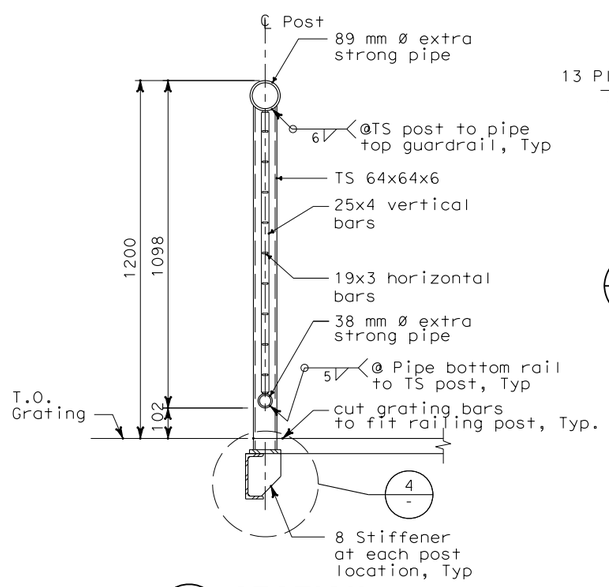


**D / AS-12 SECTION**
SCALE: 1:10

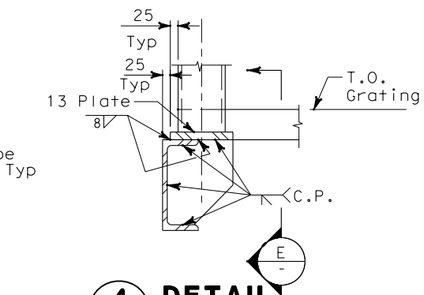


**4 / - DETAIL**
SCALE: 1:5

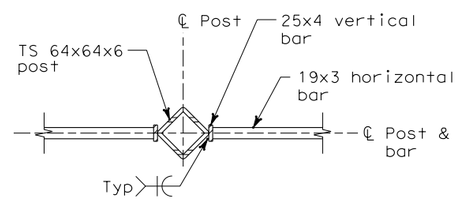


**F / AS-12 SECTION**
SCALE: 1:5

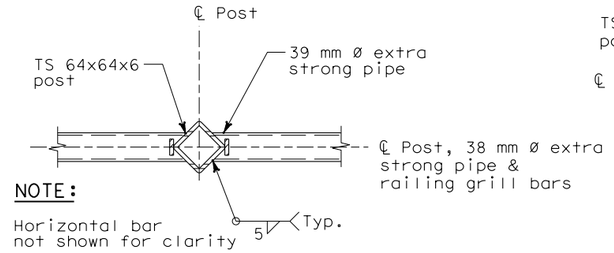


NOTE:
Horizontal bar not shown for clarity

**L / - SECTION**
SCALE: 1:5

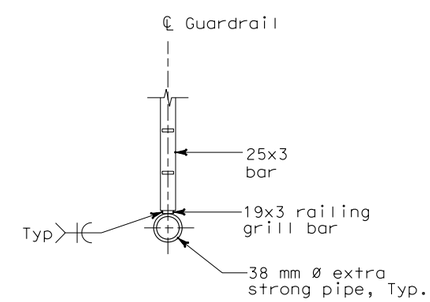


**M / - SECTION**
SCALE: 1:5

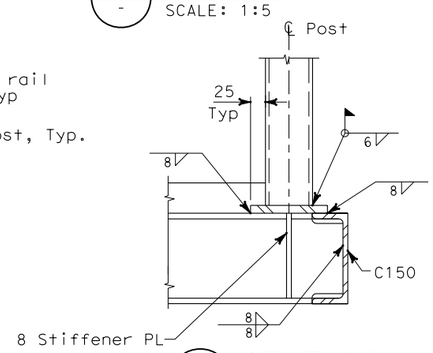


**E / - SECTION**
SCALE: 1:5

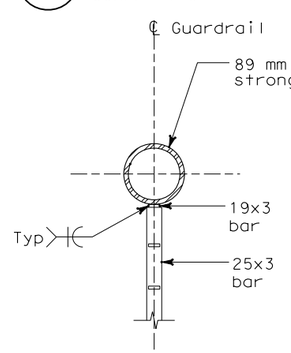


**G / AS-12 SECTION**
SCALE: 1:5

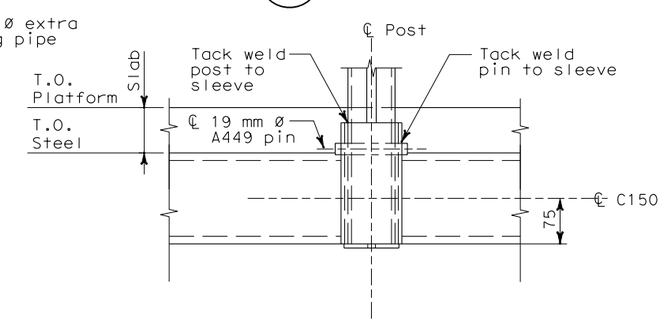


**H / - SECTION**
SCALE: 1:5

ALL DIMENSIONS ARE IN MILLIMETERS UNLESS OTHERWISE SHOWN

| | | | |
|---|---|---|---|
| Bob Zandipour, DESIGN OVERSIGHT | DESIGN | BY E. Lucas | CHECKED M. S. Owyang |
| 4-14-04, SIGN OFF DATE | LAYOUT | BY L. Reyes | CHECKED M. S. Owyang |
| | QUANTITIES | BY I. Horton | CHECKED P. McNamee |

PREPARED FOR THE STATE OF CALIFORNIA DEPARTMENT OF TRANSPORTATION

Brady Nadell, PROJECT ENGINEER

BRIDGE NO. 34-0006
KILOMETER POST 13.2/13.9

# SAS SUPERSTRUCTURE
## PULL BOX SUPPORT PLAN, SECTIONS AND DETAILS

AS-12A

ORIGINAL SCALE IN MILLIMETERS FOR REDUCED PLANS 0 10 20 30 40 50 60 70 80 90 100

CU 04251
EA 0120F1

DISREGARD PRINTS BEARING EARLIER REVISION DATES

REVISION DATES (PRELIMINARY STAGE ONLY) SHEET OF

DGN FILE => T:\13103\MS\pse\SAS Struc\CCO\SAS CCO55\04-0120f1_0082S01.dgn
USERNAME => garciar

DATE PLOTTED => 6/12/2008 TIME PLOTTED => 5:19:21 PM