DIST	COUNTY	ROUTE	KILOMETER POST TOTAL PROJECT	SHEET No	TOTAL SHEETS
04	SF	80	13.2/13.9	83S1	1204

REGISTERED CIVIL ENGINEER 3/30/09

PLANS APPROVAL DATE

REGISTERED PROFESSIONAL ENGINEER Mee Shing Owyang No. 24960 Exp. 12/31/09 CIVIL STATE OF CALIFORNIA

The State of California or its officers or agents shall not be responsible for the accuracy or completeness of electronic copies of this plan sheet.

PB AMERICAS, Inc.
303 Second Street, Suite 700N
San Francisco, CA 94107

Caltrans now has a web site! To get to the web site, go to: http://www.dot.ca.gov

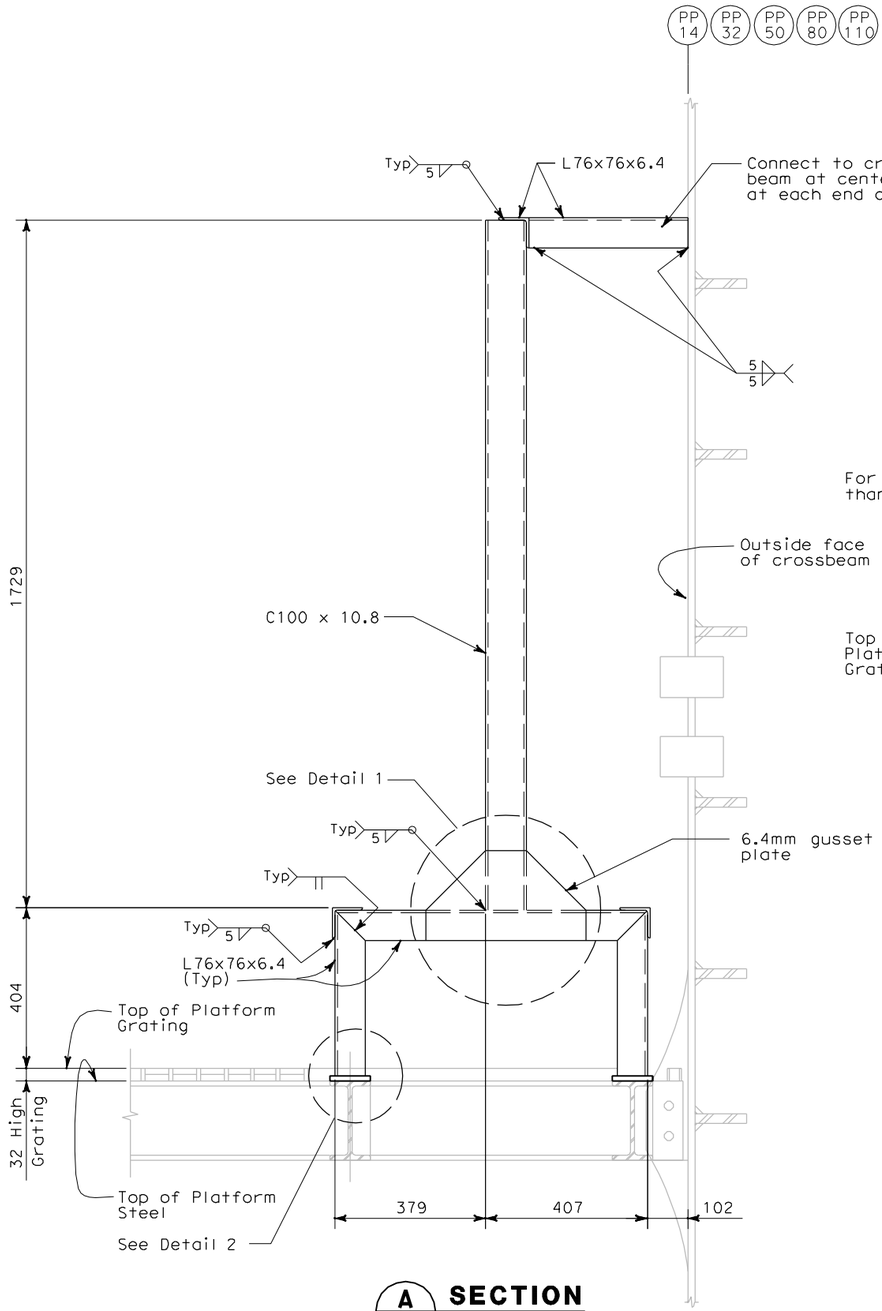

A AS-13 **SECTION**
NOT TO SCALE

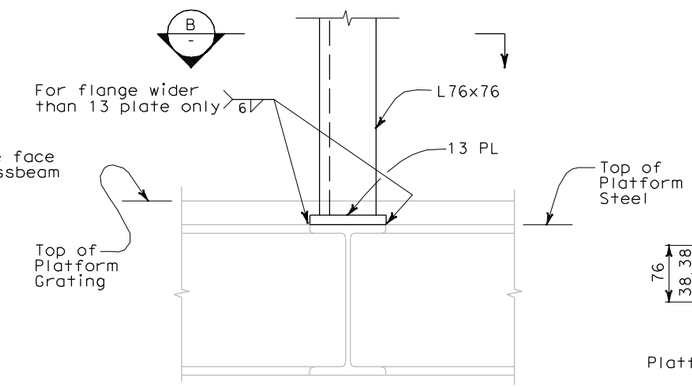

2 - **DETAIL**
NOT TO SCALE

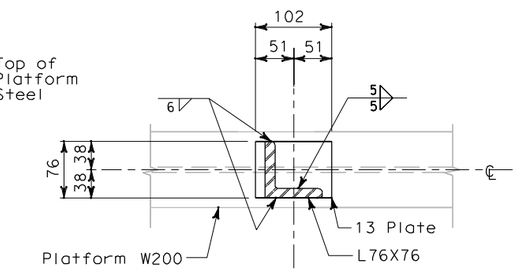

B - **SECTION**
NOT TO SCALE

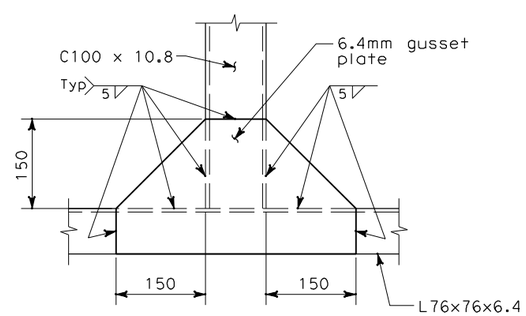

1 - **DETAIL**
NOT TO SCALE

NOTES:

1. The contractor shall verify all controlling field dimensions before ordering or fabricating any material.
2. For structural notes, see sheet AS-1.
3. Contractor has the option to perform welds shown on this drawing in the shop or the field.

REQUEST FOR INFORMATION NOT ADDRESSED IN THIS CCO REMAIN IN FORCE

MARK	DATE	DESCRIPTIONS	BY	CH'D	CCO#
0	04/09/09	SERVICE PLATFORM ELECTRICAL CHANGES	NK	MSO	55

REVISIONS

CONTRACT CHANGE ORDER NO._____
SHEET _____ OF _____

ALL DIMENSIONS ARE IN MILLIMETERS UNLESS OTHERWISE SHOWN

Bob Zandipour
DESIGN OVERSIGHT

SIGN OFF DATE

	BY	CHECKED
DESIGN	N. King	M. S. Owyang
DETAILS	L. Reyes	M. S. Owyang
QUANTITIES		

PREPARED FOR THE STATE OF CALIFORNIA DEPARTMENT OF TRANSPORTATION

PROJECT ENGINEER

BRIDGE NO. 34-0006
KILOMETER POST 13.2/13.9

SAS SUPERSTRUCTURE
ELECTRICAL PANEL SUPPORT SECTIONS SHEET 1

AS-13A

DESIGN DETAIL SHEET (METRIC) (REV. 3/1/98)

ORIGINAL SCALE IN MILLIMETERS FOR REDUCED PLANS 0 10 20 30 40 50 60 70 80 90 100

CU 04251
EA 0120F1

DISREGARD PRINTS BEARING EARLIER REVISION DATES

REVISION DATES (PRELIMINARY STAGE ONLY) SHEET OF

FILE => T:\13103\MS\pse\SAS Struc\CCO\SAS CCO55\2009-04-09_Issued for Submittal\04-0120f1_0083S01.dgn

USERNAME => llorico DATE PLOTTED => 4/9/2009 TIME PLOTTED => 4:46:57 PM

$FREQUEST