DIST	COUNTY	ROUTE	KILOMETER POST TOTAL PROJECT	SHEET No	TOTAL SHEETS
04	SF	80	13.2/13.9	82R1	1204

REGISTERED STRUCTURAL ENGINEER — DATE 4/02/04

12-6-04
PLANS APPROVAL DATE

REGISTERED PROFESSIONAL ENGINEER — Mee Shing Owyang — No. 24960 — Exp. 12/31/05 — CIVIL — STATE OF CALIFORNIA

PARSONS BRINCKERHOFF QUADE & DOUGLAS, INC.
303 SECOND STREET, SUITE 700 N
SAN FRANCISCO, CA 94107

The State of California or its officers or agents shall not be responsible for the accuracy or completeness of electronic copies of this plan sheet.

Caltrans now has a web site! To get to the web site, go to http://www.dot.ca.gov

REQUEST FOR INFORMATION NOT ADDRESSED IN THIS CCO REMAIN IN FORCE

MARK	DATE	DESCRIPTIONS	BY	CH'D	CCO#
1	04/09/09	SERVICE PLATFORM ELECTRICAL CHANGES	GB	MSO	55

REVISIONS

CONTRACT CHANGE ORDER NO. _____
SHEET _____ OF _____

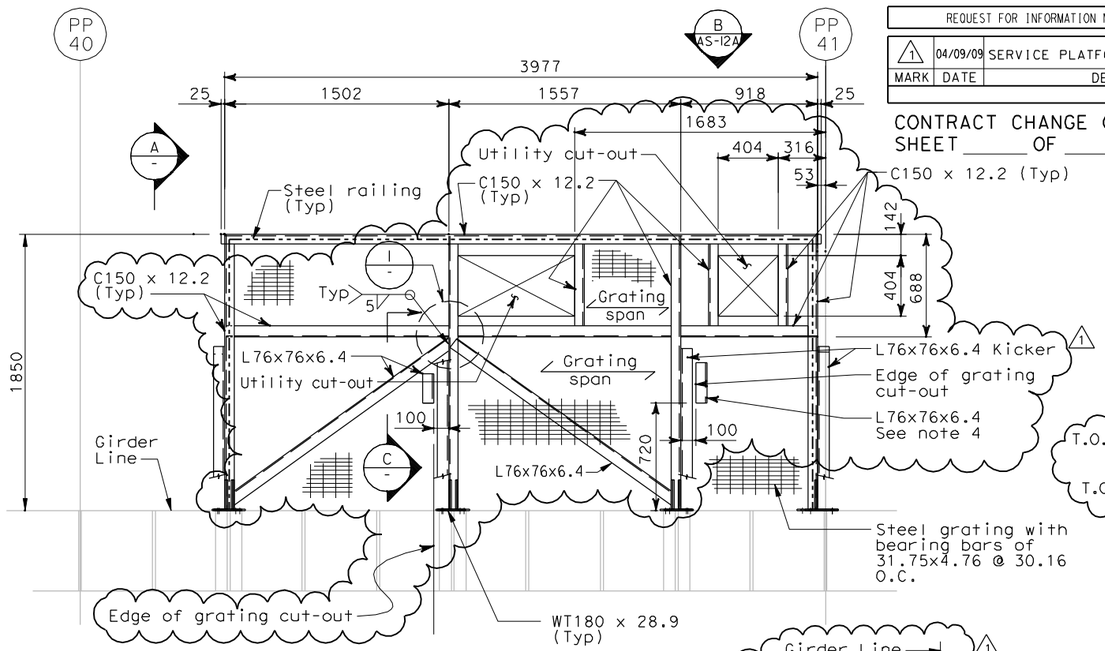

PLAN
SCALE: 1:20

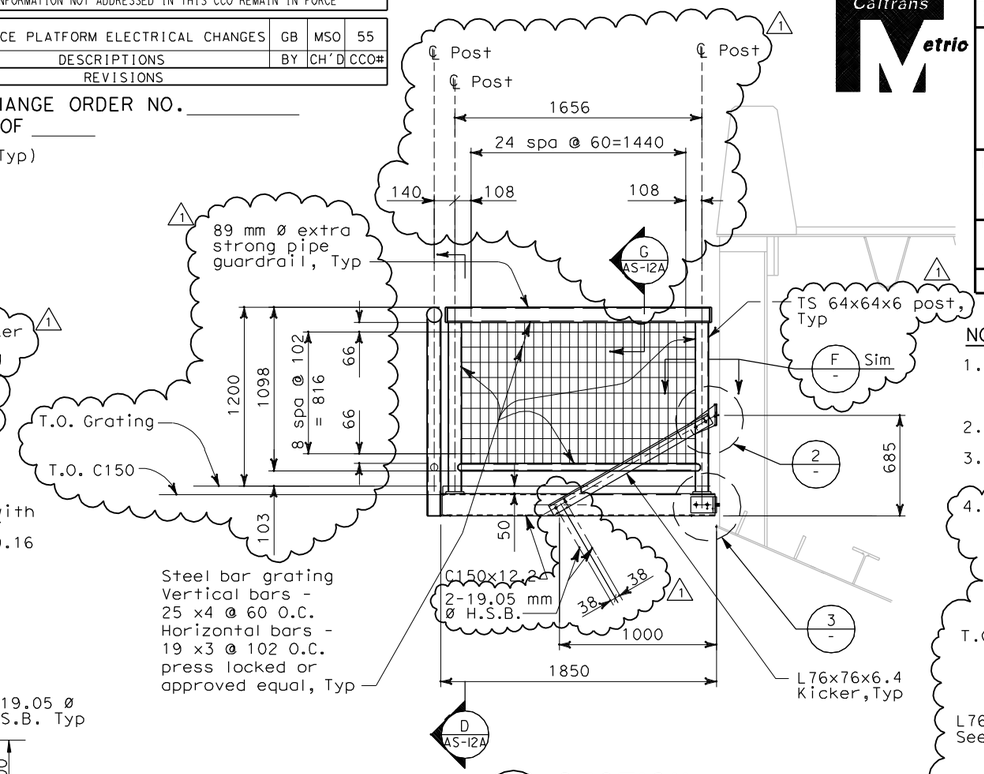

A SECTION
SCALE: 1:20

NOTES:

1. The contractor shall verify all controlling field dimensions before ordering or fabricating any material.
2. For structural notes, see sheet AS-1.
3. For pull box support locations, see electrical plans.
4. Weld L76x76x6.4 to each cut bearing bar at cut-out. Extend L76x76x6.4 beyond cut-out and weld it to at least three bearing bars on each side of cut-out supported by platform framing.

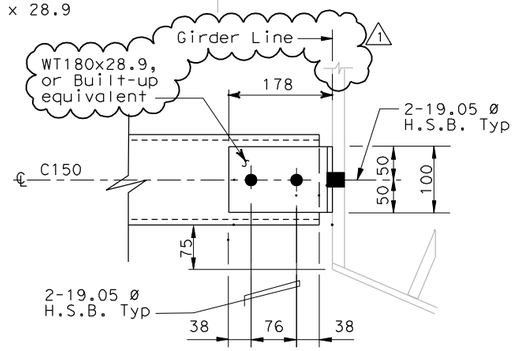

3 DETAIL
NO SCALE

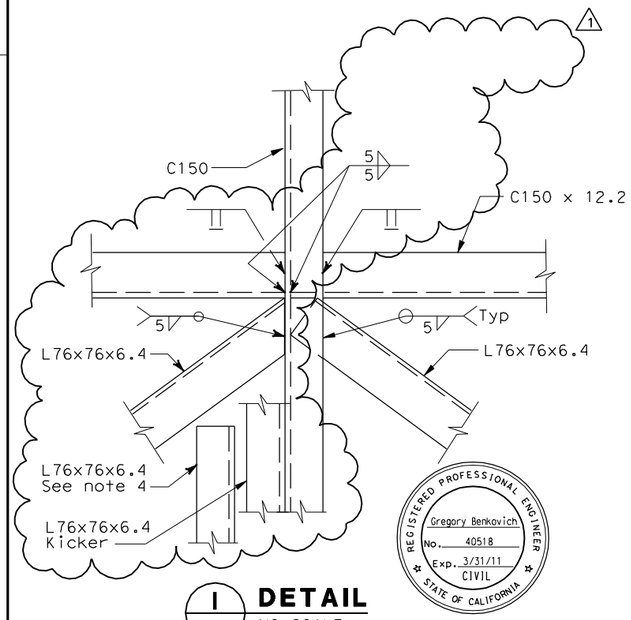

1 DETAIL
NO SCALE

Gregory Benkovich
FOR REVISION ONLY
1

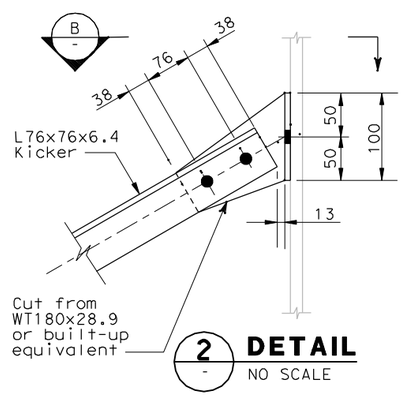

2 DETAIL
NO SCALE

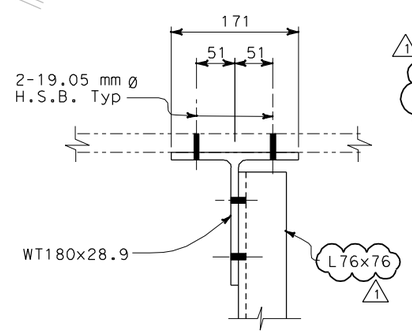

WT180x28.9 OPTION

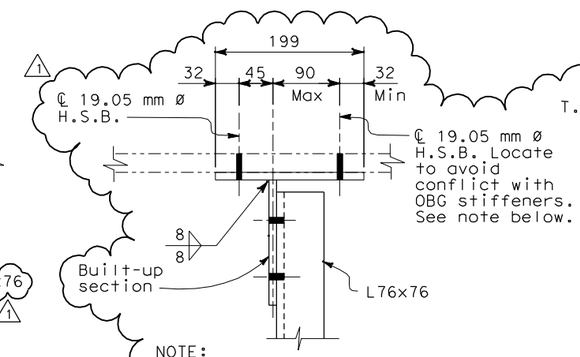

NOTE:
Built-up option shall be used only when when 19 mm Ø H.S.B. interfere with OBG stiffeners.

BUILT-UP OPTION

B SECTION
NO SCALE

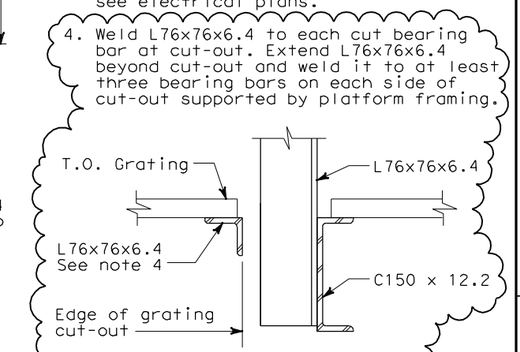

D SECTION
NO SCALE

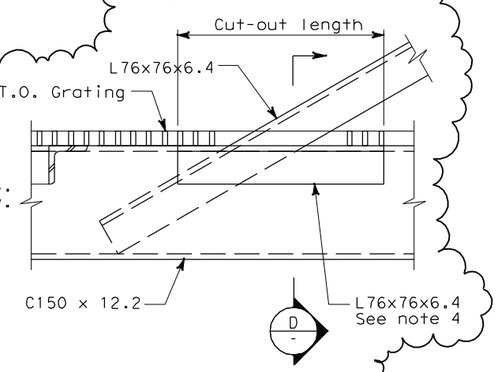

C SECTION
NO SCALE

ALL DIMENSIONS ARE IN MILLIMETERS UNLESS OTHERWISE SHOWN

DESIGN	BY E. Lucas	CHECKED M. S. Owyang	
LAYOUT	BY L. Reyes	CHECKED M. S. Owyang	
QUANTITIES	BY I. Horton	CHECKED P. McNamee	

Bob Zandipour
DESIGN OVERSIGHT
4-14-04
SIGN OFF DATE

PREPARED FOR THE STATE OF CALIFORNIA DEPARTMENT OF TRANSPORTATION

Brady Nadell
PROJECT ENGINEER

BRIDGE NO. 34-0006
KILOMETER POST 13.2/13.9

SAS SUPERSTRUCTURE
PULL BOX SUPPORT PLAN, SECTIONS AND DETAILS

AS-12

ORIGINAL SCALE IN MILLIMETERS FOR REDUCED PLANS 0 10 20 30 40 50 60 70 80 90 100

CU 04251
EA 0120F1

DISREGARD PRINTS BEARING EARLIER REVISION DATES

REVISION DATES (PRELIMINARY STAGE ONLY) — SHEET — OF

DGN FILE => T:\13103\MS\pse\SAS Struc\CCO\SAS CC055\2009-04-09_Issued for Submittal\04-0120f1_0082R01.dgn
USERNAME => llorico

DATE PLOTTED => 4/9/2009 TIME PLOTTED => 11:25:52 AM