DIST	COUNTY	ROUTE	KILOMETER POST TOTAL PROJECT	SHEET No	TOTAL SHEETS
04	SF	80	13.2/13.9	72R4	1204

REGISTERED STRUCTURAL ENGINEER — DATE 12/19/02

12-6-04
PLANS APPROVAL DATE

REGISTERED PROFESSIONAL ENGINEER — Mee Shing Owyang — No. 24960 — Exp. 12/31/07 — CIVIL — STATE OF CALIFORNIA

PARSONS BRINCKERHOFF QUADE & DOUGLAS, INC.
303 SECOND STREET, SUITE 700 N
SAN FRANCISCO, CA 94107

Caltrans Metric.

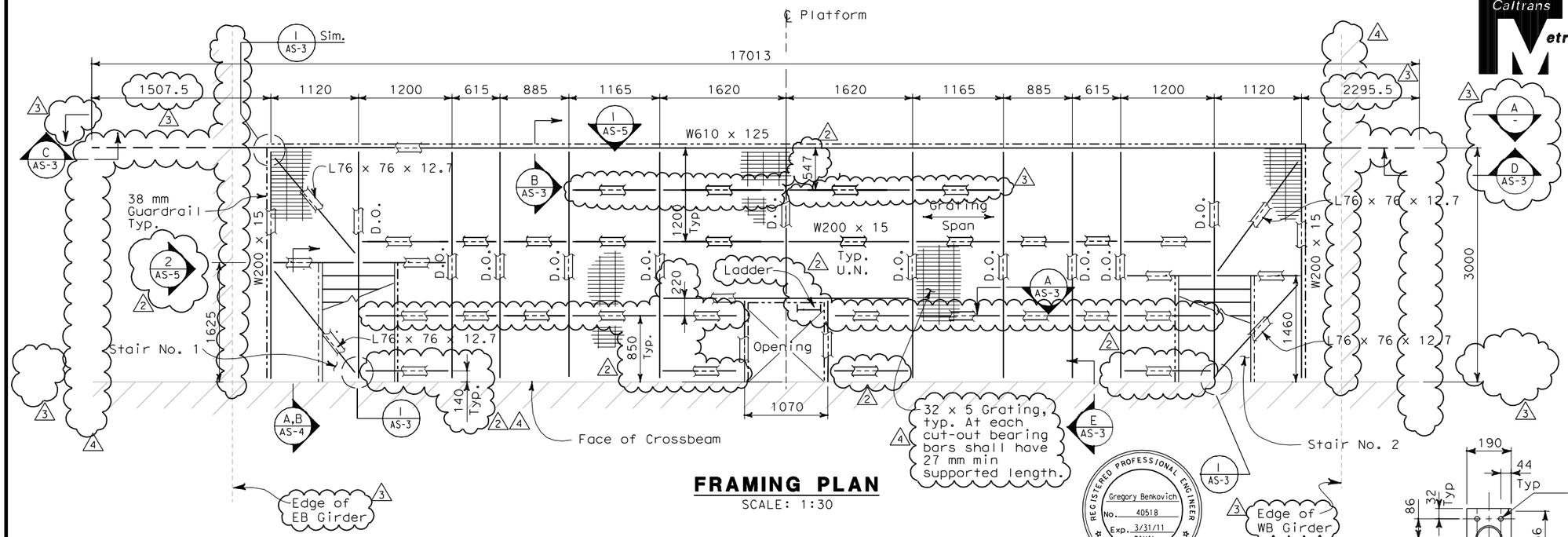

FRAMING PLAN
SCALE: 1:30

REGISTERED PROFESSIONAL ENGINEER — Gregory Benkovich — No. 40518 — Exp. 3/31/11 — CIVIL — STATE OF CALIFORNIA

FOR REVISION ONLY 2 3 4

REGISTERED PROFESSIONAL ENGINEER — Mee Shing Owyang — No. 24960 — Exp. 12/31/09 — CIVIL — STATE OF CALIFORNIA

FOR REVISION ONLY 1

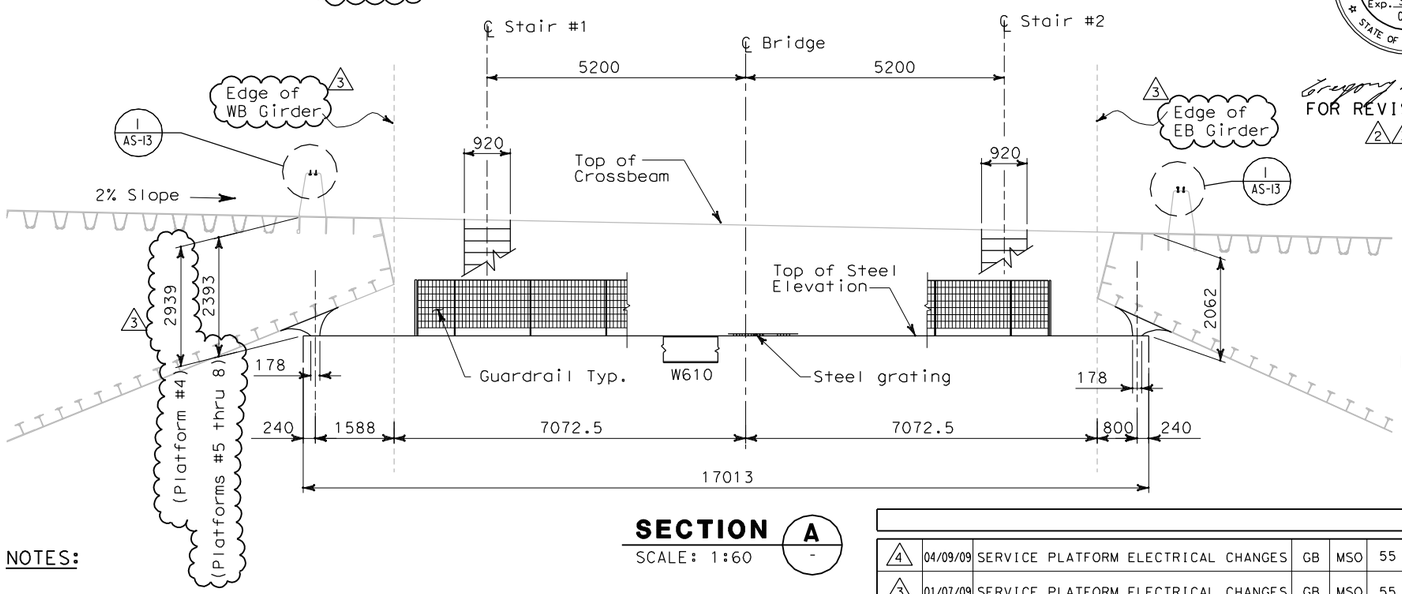

SECTION A
SCALE: 1:60

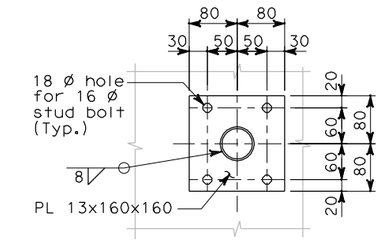

SECTION C
SCALE: 1:5

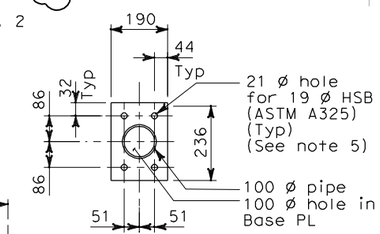

SECTION B
SCALE: 1:10

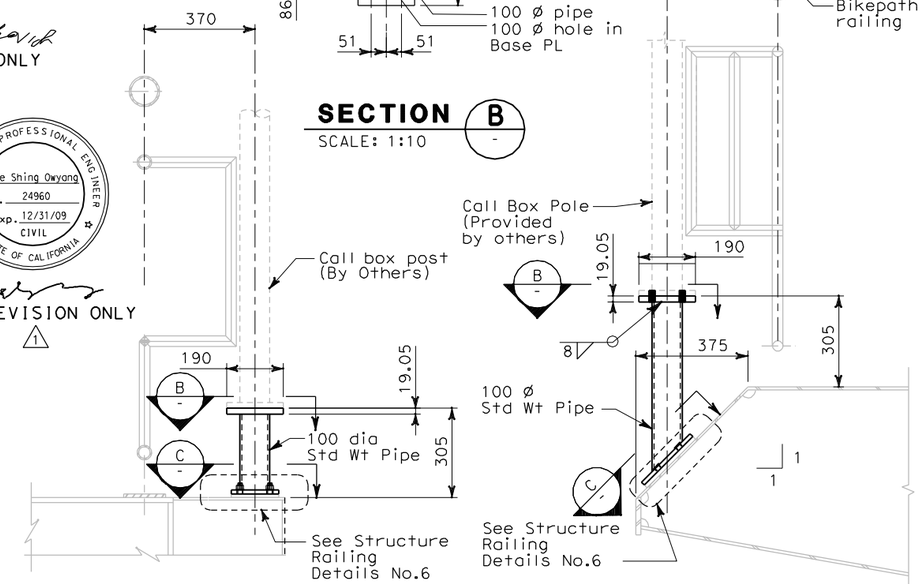

AT BELVEDERE

DETAIL 2
SCALE: 1:10
NOTE 5

AT BIKE PATH

DETAIL 1
SCALE: 1:10
NOTE 5

ALL DIMENSIONS ARE IN MILLIMETERS UNLESS OTHERWISE SHOWN

NOTES:

1. Total weight of platform 5987 kg
2. The Contractor shall verify all controlling field dimensions before ordering or fabricating any materials.
3. For platform locations, see electrical plans.
4. For anchor bolt locations, spacing and other requirements, see electrical plan.
5. For Call Box locations, see electrical plan sheet E-397. Bolt hole size and spacings shown are for information only contractor to verify the actual bolt hole size and spacings.

MARK	DATE	DESCRIPTIONS	BY	CH'D	CCO#
4	04/09/09	SERVICE PLATFORM ELECTRICAL CHANGES	GB	MSO	55
3	01/07/09	SERVICE PLATFORM ELECTRICAL CHANGES	GB	MSO	55
2	06/12/08	SERVICE PLATFORM ELECTRICAL CHANGES	GB	MSO	55
1	03/04/08	BARRIER MODIFICATIONS.	EL	MI	44

REVISIONS

CONTRACT CHANGE ORDER NO._____
SHEET _____ OF _____

Bob Zandipour
DESIGN OVERSIGHT
4-4-04
SIGN OFF DATE

	BY	CHECKED
DESIGN	A. Van Felten	M. S. Owyang
DETAILS	A. Van Felten	M. S. Owyang
QUANTITIES	M.S. Owyang	R. Parrino

PREPARED FOR THE STATE OF CALIFORNIA DEPARTMENT OF TRANSPORTATION

Gene Lusherovich
PROJECT ENGINEER

BRIDGE NO. 34-0006
KILOMETER POST 13.2/13.9

SAS SUPERSTRUCTURE
SERVICE PLATFORM FRAMING PLAN
AS-2

DESIGN DETAIL SHEET (METRIC) (REV. 3/1/98)

ORIGINAL SCALE IN MILLIMETERS FOR REDUCED PLANS 0 10 20 30 40 50 60 70 80 90 100

CU 04251
EA 0120F1

DISREGARD PRINTS BEARING EARLIER REVISION DATES

REVISION DATES (PRELIMINARY STAGE ONLY) — SHEET — OF

FILE => t:\13103\MS\pse\SAS Struc\CCO\SAS CC055\2009-04-09_Issued for Submittal\04-0120f1_0072R04.dgn

USERNAME => llorico DATE PLOTTED => 4/24/2009 TIME PLOTTED => 8:41:38 AM

$FREQUEST

DIST	COUNTY	ROUTE	KILOMETER POST TOTAL PROJECT	SHEET No	TOTAL SHEETS
04	SF	80	13.2/13.9	73R1	1204

REGISTERED CIVIL ENGINEER 12/19/02

12-6-04
PLANS APPROVAL DATE

REGISTERED PROFESSIONAL ENGINEER Mee Shing Owyang No. 24960 Exp. 12/31/05 CIVIL STATE OF CALIFORNIA

The State of California or its officers or agents shall not be responsible for the accuracy or completeness of electronic copies of this plan sheet.

Parsons Brinckerhoff Quade & Douglas, Inc.
303 Second Street, Suite 700N
San Francisco, CA 94107

Caltrans now has a web site! To get to the web site, go to: http://www.dot.ca.gov

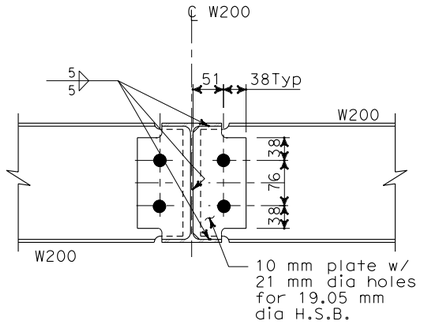

SECTION A (AS-2)
SCALE: 1:5

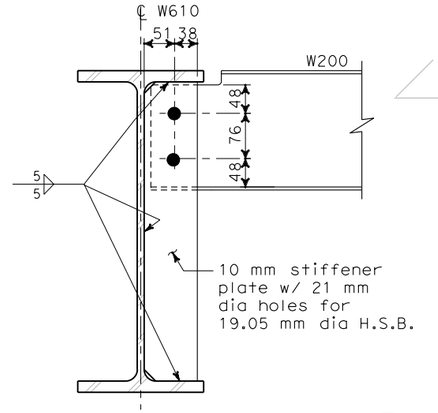

SECTION B (AS-2)
SCALE: 1:5

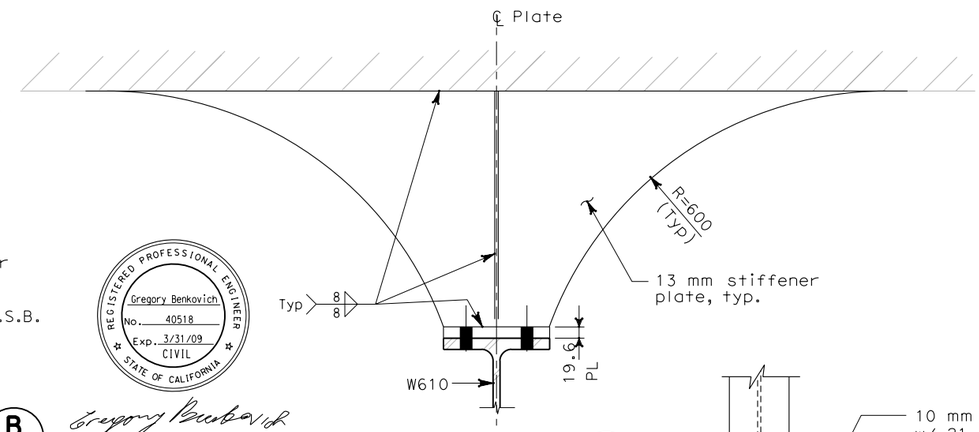

SECTION C (-)
SCALE: 1:5

REGISTERED PROFESSIONAL ENGINEER Gregory Benkovich No. 40518 Exp. 3/31/09 CIVIL STATE OF CALIFORNIA

Gregory Benkovich
FOR REVISION ONLY
1

REQUEST FOR INFORMATION NOT ADDRESSED IN THIS CCO REMAIN IN FORCE					
1	03/30/09	SERVICE PLATFORM ELECTRICAL CHANGES	GB	MSO	55
MARK	DATE	DESCRIPTIONS	BY	CH'D	CCO#
REVISIONS					

CONTRACT CHANGE ORDER NO. _____
SHEET _____ OF _____

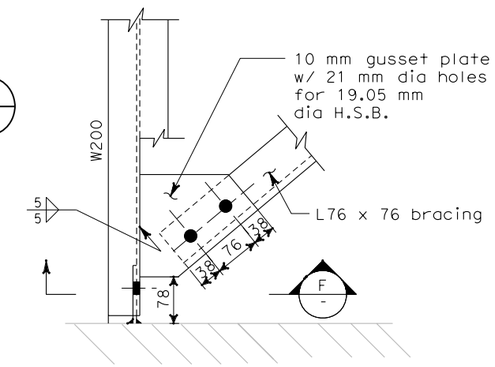

DETAIL I (AS-2)
SCALE: 1:5

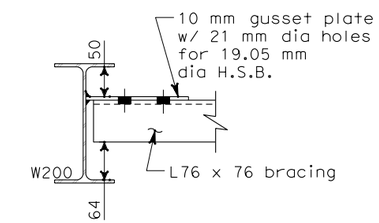

SECTION F (-)
SCALE: 1:5

NOTES:

1. For structural notes, see sheet AS-1.
2. The contractor shall verify all controlling field dimensions before ordering or fabricating any materials.

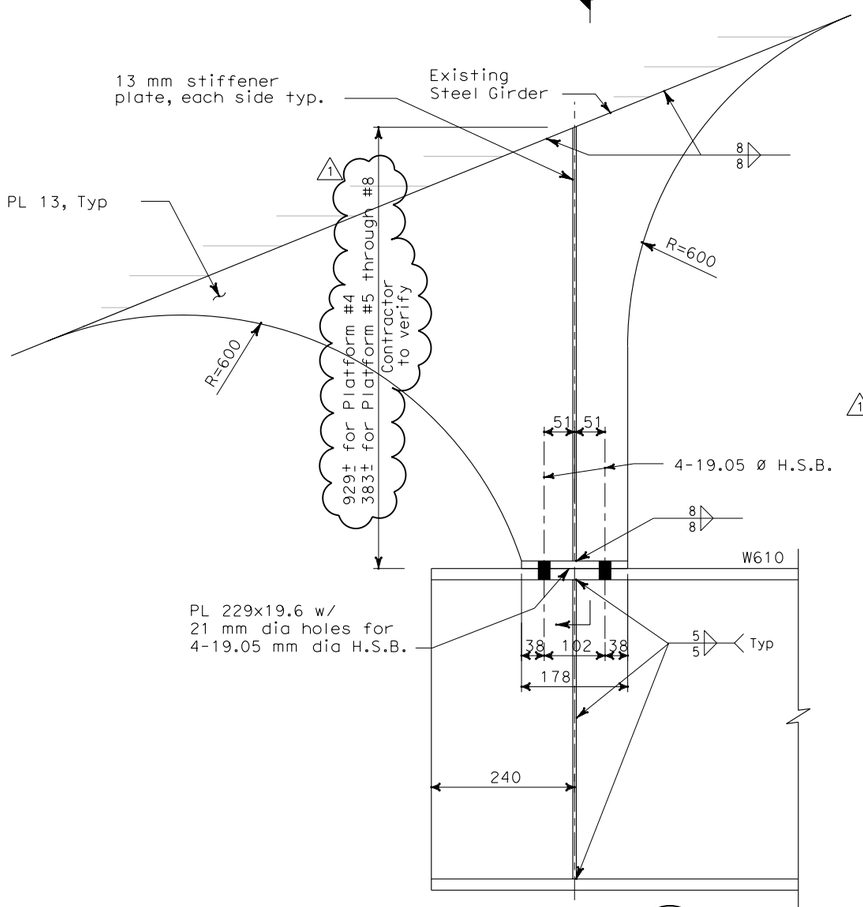

SECTION C (AS-2)
SCALE: 1:5

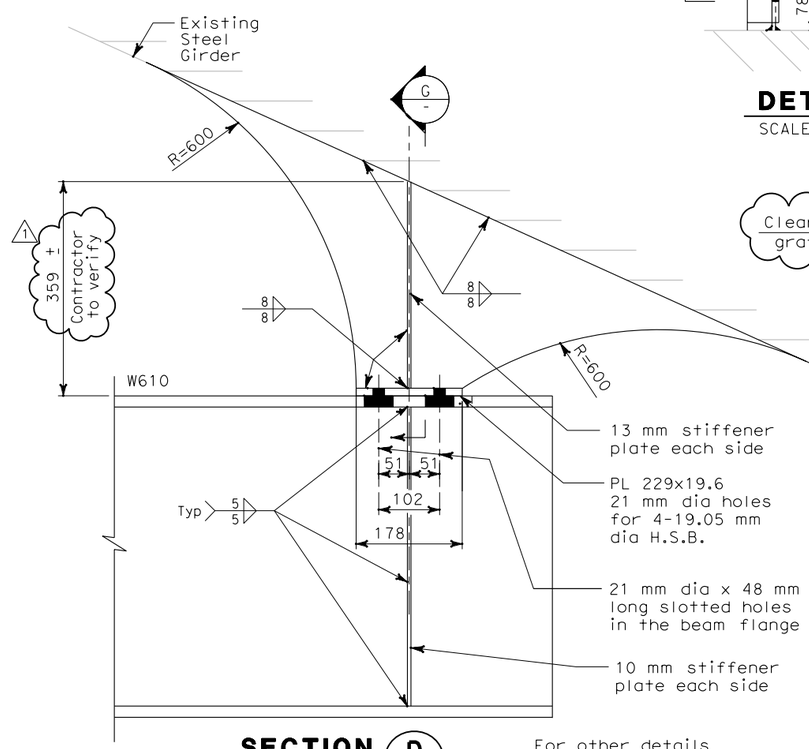

SECTION D (AS-2)
SCALE: 1:5

For other details not shown, see section C

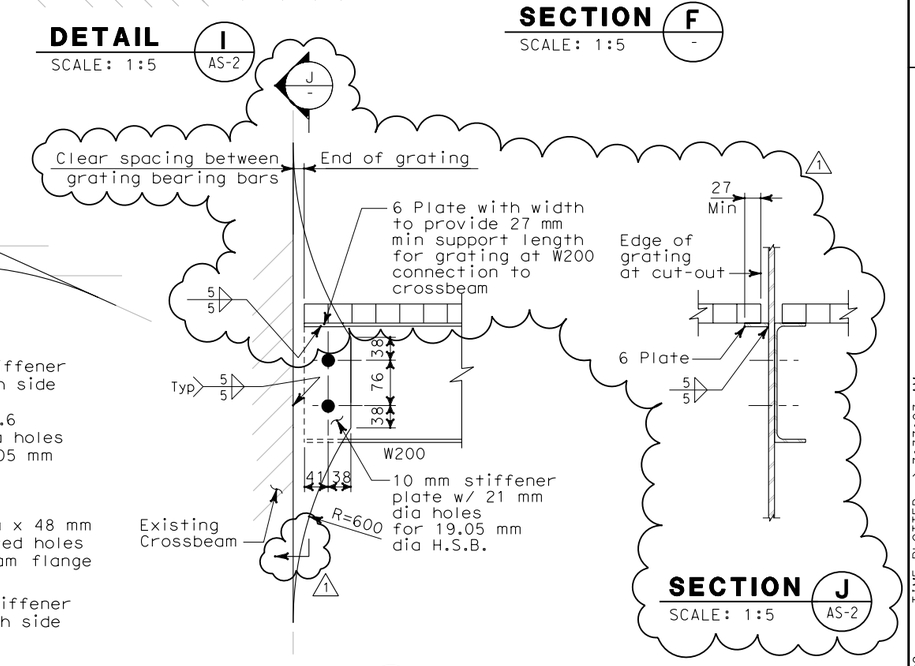

SECTION E (AS-2)
SCALE: 1:5

SECTION J (AS-2)
SCALE: 1:5

ALL DIMENSIONS ARE IN MILLIMETERS UNLESS OTHERWISE SHOWN

BoB Zandipour
DESIGN OVERSIGHT

SIGN OFF DATE

	BY	CHECKED
DESIGN	A. Van Felten	M.S. Owyang
LAYOUT	A. Van Felten	M.S. Owyang
QUANTITIES	M.S. Owyang	R. Parrino

PREPARED FOR THE STATE OF CALIFORNIA DEPARTMENT OF TRANSPORTATION

Brady Nadell
PROJECT ENGINEER

BRIDGE NO. 34-0006
KILOMETER POST 13.2/13.9

SAS SUPERSTRUCTURE

SERVICE PLATFORM FRAMING DETAILS

AS-3

DESIGN DETAIL SHEET (METRIC) (REV. 3/1/98)

ORIGINAL SCALE IN MILLIMETERS FOR REDUCED PLANS 0 10 20 30 40 50 60 70 80 90 100

CU 04251
EA 0120F1

DISREGARD PRINTS BEARING EARLIER REVISION DATES

REVISION DATES (PRELIMINARY STAGE ONLY) SHEET OF

DGN FILE => T:\13103\MS\pse\SAS Struc\CCO\SAS CC055\04-0120f1_0073R01.dgn
USERNAME => garciar

DATE PLOTTED => 4/1/2009 TIME PLOTTED => 7:37:07 AM

$FREQUEST

DIST	COUNTY	ROUTE	KILOMETER POST TOTAL PROJECT	SHEET No	TOTAL SHEETS
04	SF	80	13.2/13.9	75R2	1204

REGISTERED CIVIL ENGINEER 12/19/02

12-6-04
PLANS APPROVAL DATE

REGISTERED PROFESSIONAL ENGINEER Mee Shing Owyang No. 24960 Exp. 12/31/08 CIVIL STATE OF CALIFORNIA

The State of California or its officers or agents shall not be responsible for the accuracy or completeness of electronic copies of this plan sheet.

Parsons Brinckerhoff Quade & Douglas, Inc.
303 Second Street, Suite 700N
San Francisco, CA 94107

Caltrans now has a web site! To get to the web site, go to: http://www.dot.ca.gov

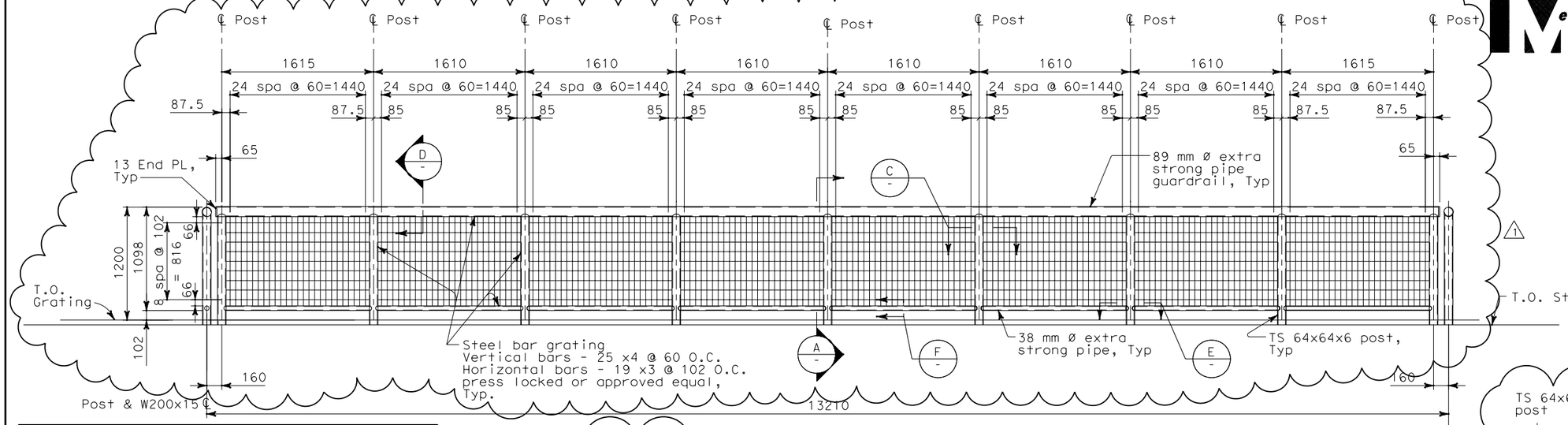

1 ELEVATION
AS-2 SCALE: 1:25

NOTES:

1. The contractor shall verify all controlling field dimensions before ordering or fabricating any material.
2. For structural notes, see sheet AS-1.

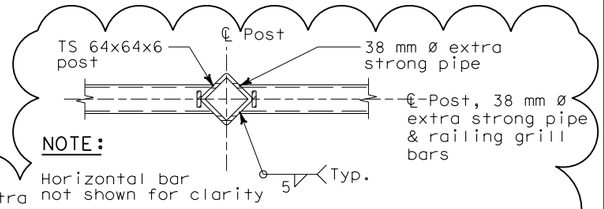

NOTE:
Horizontal bar not shown for clarity

E SECTION
SCALE: 1:5

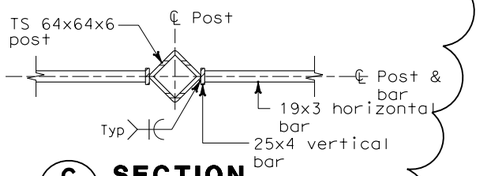

C SECTION
SCALE: 1:5

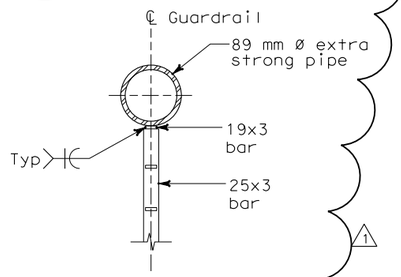

D SECTION
SCALE: 1:5

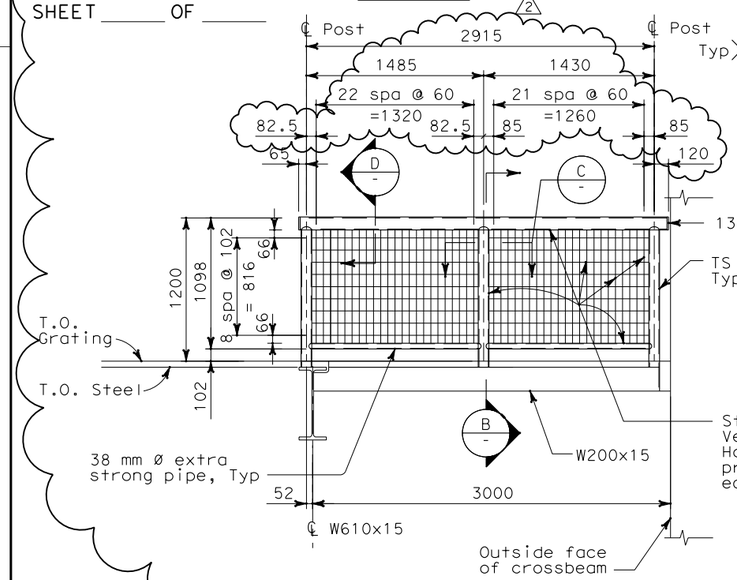

2 ELEVATION
SCALE: 1:25

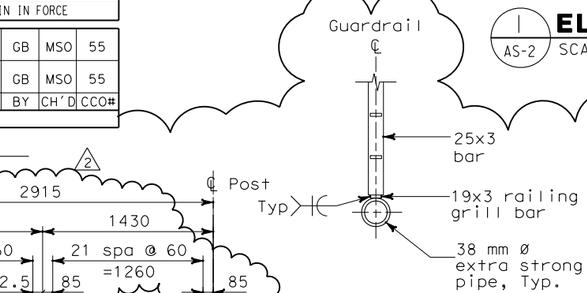

F SECTION
SCALE: 1:5

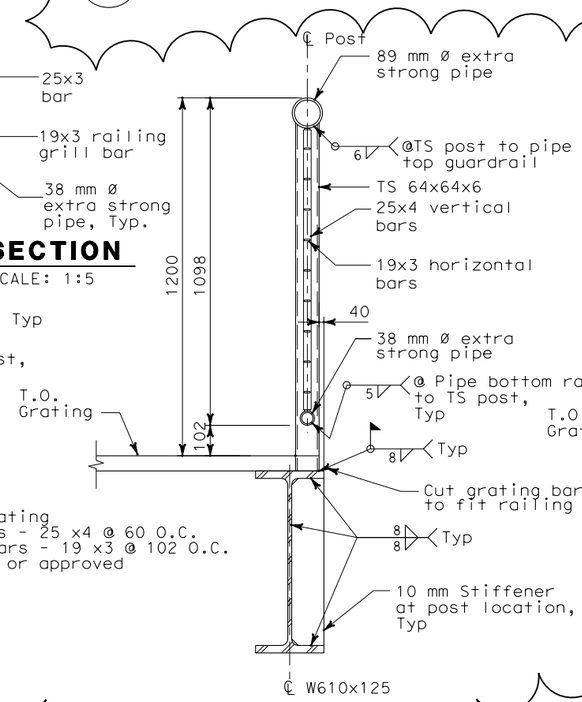

A SECTION
SCALE: 1:10

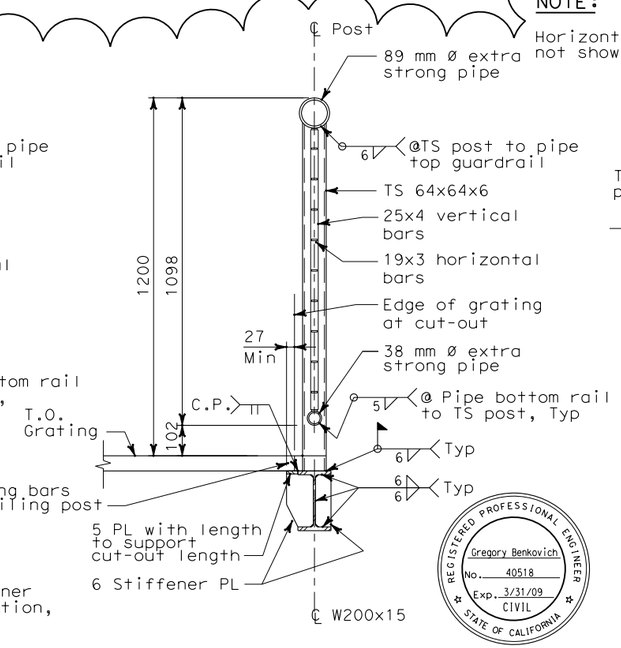

B SECTION
SCALE: 1:10

REGISTERED PROFESSIONAL ENGINEER Gregory Benkovich No. 40518 Exp. 3/31/09 CIVIL STATE OF CALIFORNIA

Gregory Benkovich
FOR REVISION ONLY 1 2

REQUEST FOR INFORMATION NOT ADDRESSED IN THIS CCO REMAIN IN FORCE					
2	03/30/09	SERVICE PLATFORM ELECTRICAL CHANGES	GB	MSO	55
1	06/12/08	SERVICE PLATFORM ELECTRICAL CHANGES	GB	MSO	55
MARK	DATE	DESCRIPTIONS	BY	CH'D	CCO#
		REVISIONS			

CONTRACT CHANGE ORDER NO. _____
SHEET _____ OF _____

ALL DIMENSIONS ARE IN MILLIMETERS UNLESS OTHERWISE SHOWN

Bob Zandipour
DESIGN OVERSIGHT
4-4-04
SIGN OFF DATE

	BY	CHECKED
DESIGN	A. Van Felten	M.S. Owyang
LAYOUT	A. Van Felten	M.S. Owyang
QUANTITIES	M.S. Owyang	R. Parrino

PREPARED FOR THE STATE OF CALIFORNIA DEPARTMENT OF TRANSPORTATION

Brady Nadell
PROJECT ENGINEER

BRIDGE NO. 34-0006
KILOMETER POST 13.2/13.9

SAS SUPERSTRUCTURE
SERVICE PLATFORM DETAILS
AS-5

DESIGN DETAIL SHEET (METRIC) (REV. 3/1/98)

ORIGINAL SCALE IN MILLIMETERS FOR REDUCED PLANS 0 10 20 30 40 50 60 70 80 90 100

CU 04251
EA 0120F1

DISREGARD PRINTS BEARING EARLIER REVISION DATES

REVISION DATES (PRELIMINARY STAGE ONLY) SHEET OF

DGN FILE => T:\13103\MS\pse\SAS Struc\CCO\SAS CCO55\04-0120f1_0075R02.dgn
USERNAME => garciar

DATE PLOTTED => 4/1/2009 TIME PLOTTED => 7:38:07 AM

$FREQUEST

DIST	COUNTY	ROUTE	KILOMETER POST TOTAL PROJECT	SHEET NO	TOTAL SHEETS
04	SF	80	13.2/13.9	82R2	1204

REGISTERED STRUCTURAL ENGINEER 4/02/04 DATE

12-6-04
PLANS APPROVAL DATE

REGISTERED PROFESSIONAL ENGINEER Mee Shing Owyong No. 24960 Exp. 12/31/05 CIVIL STATE OF CALIFORNIA

PARSONS BRINCKERHOFF QUADE & DOUGLAS, INC.
303 SECOND STREET, SUITE 700 N
SAN FRANCISCO, CA 94107

The State of California or its officers or agents shall not be responsible for the accuracy or completeness of electronic copies of this plan sheet.

Caltrans now has a web site! To get to the web site, go to http://www.dot.ca.gov

Caltrans Metric

REQUEST FOR INFORMATION NOT ADDRESSED IN THIS CCO REMAIN IN FORCE

MARK	DATE	DESCRIPTIONS	BY	CH'D	CCO#
2	04/09/09	SERVICE PLATFORM ELECTRICAL CHANGES	GB	MSO	55
1	06/12/08	SERVICE PLATFORM ELECTRICAL CHANGES	GB	MSO	55

REVISIONS

CONTRACT CHANGE ORDER NO._____
SHEET _____ OF _____

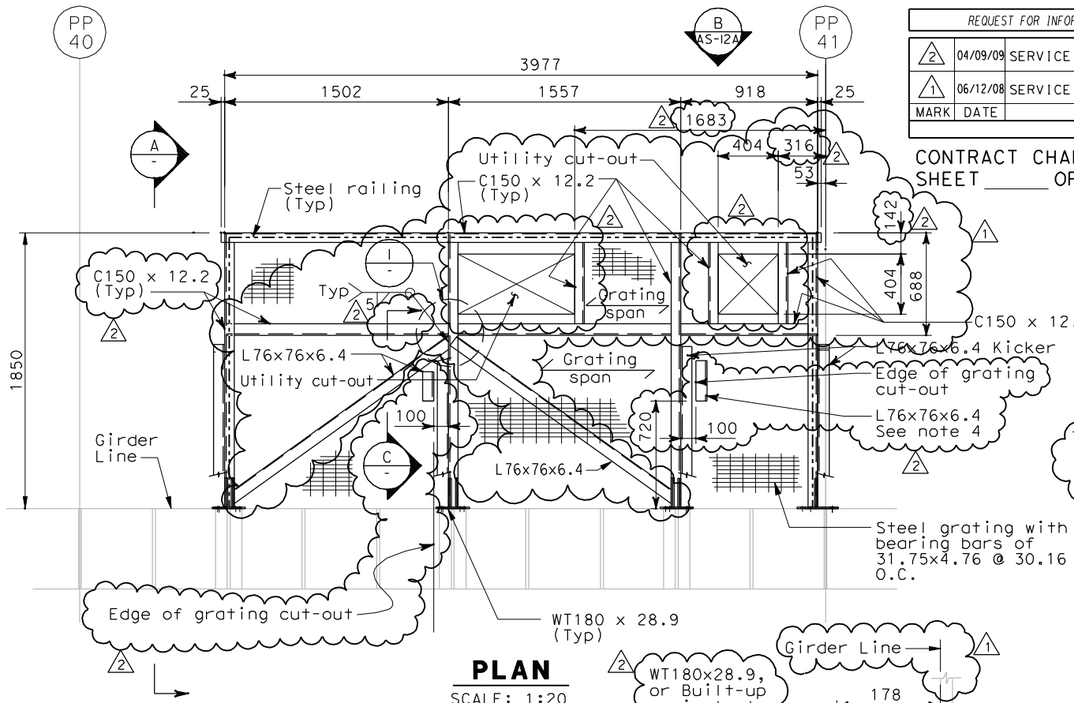

PLAN
SCALE: 1:20

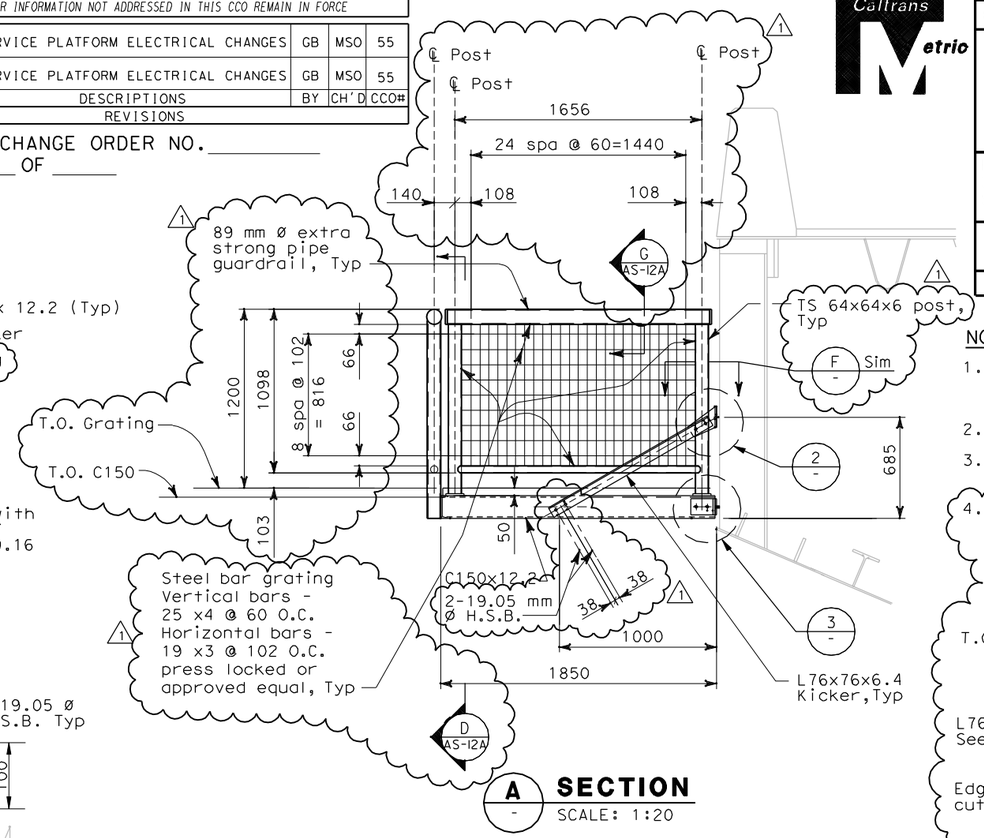

A SECTION
SCALE: 1:20

NOTES:

1. The contractor shall verify all controlling field dimensions before ordering or fabricating any material.
2. For structural notes, see sheet AS-1.
3. For pull box support locations, see electrical plans.
4. Weld L76x76x6.4 to each cut bearing bar at cut-out. Extend L76x76x6.4 beyond cut-out and weld it to at least three bearing bars on each side of cut-out supported by platform framing.

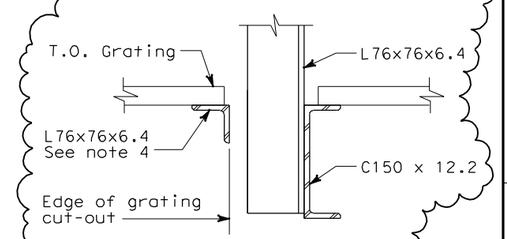

D SECTION
NO SCALE

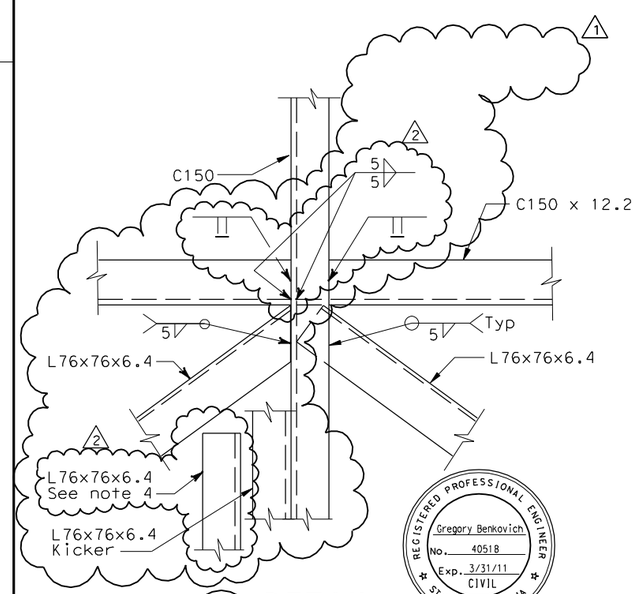

1 DETAIL
NO SCALE

Gregory Benkovich
FOR REVISION ONLY
1 2

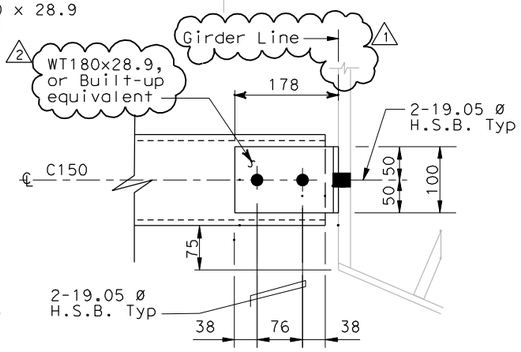

3 DETAIL
NO SCALE

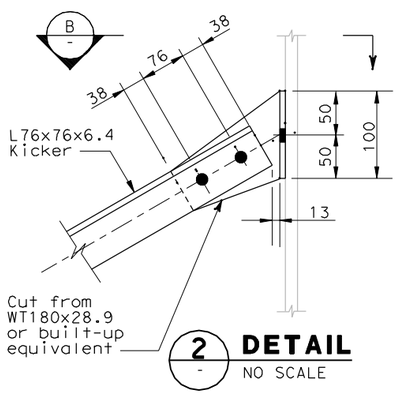

2 DETAIL
NO SCALE

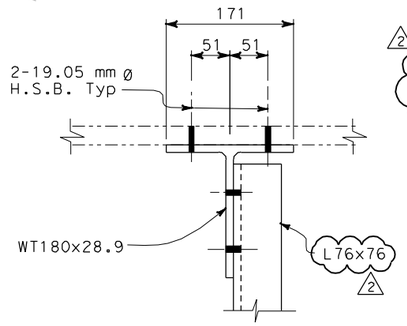

WT180x28.9 OPTION

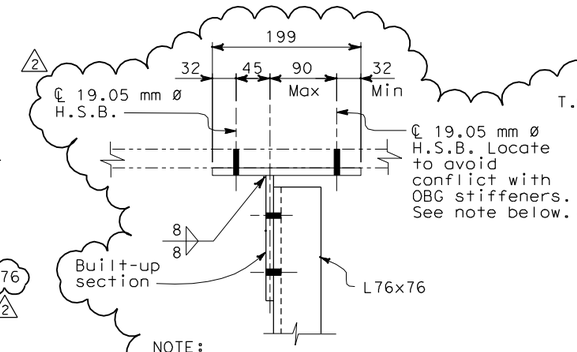

NOTE:
Built-up option shall be used only when when 19 mm Ø H.S.B. interfere with OBG stiffeners.

BUILT-UP OPTION

B SECTION
NO SCALE

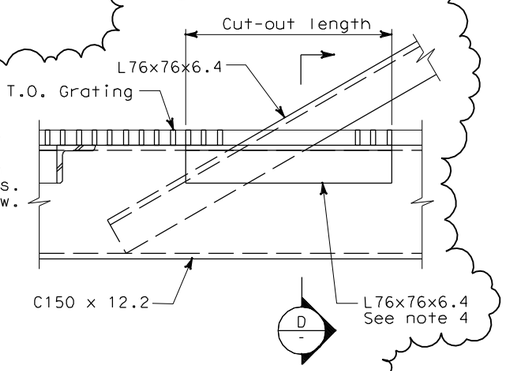

C SECTION
NO SCALE

ALL DIMENSIONS ARE IN MILLIMETERS UNLESS OTHERWISE SHOWN

Bob Zandipour
DESIGN OVERSIGHT
4-14-04
SIGN OFF DATE

	BY	CHECKED
DESIGN	E. Lucas	M. S. Owyang
LAYOUT	L. Reyes	M. S. Owyang
QUANTITIES	I. Horton	P. McNamee

PREPARED FOR THE STATE OF CALIFORNIA DEPARTMENT OF TRANSPORTATION

Brady Nadell
PROJECT ENGINEER

BRIDGE NO. 34-0006
KILOMETER POST 13.2/13.9

SAS SUPERSTRUCTURE
PULL BOX SUPPORT PLAN, SECTIONS AND DETAILS

AS-12

ORIGINAL SCALE IN MILLIMETERS FOR REDUCED PLANS 0 10 20 30 40 50 60 70 80 90 100

CU 04251
EA 0120F1

DISREGARD PRINTS BEARING EARLIER REVISION DATES

REVISION DATES (PRELIMINARY STAGE ONLY) SHEET OF

DGN FILE => T:\13103\MS\pse\SAS Struc\CCO\SAS CC055\04-0120f1_0082R02.dgn
USERNAME => llorico

DATE PLOTTED => 4/22/2009 TIME PLOTTED => 1:47:50 PM

DIST	COUNTY	ROUTE	KILOMETER POST TOTAL PROJECT	SHEET NO	TOTAL SHEETS
04	SF	80	13.2/13.9	82 S1R1	1204

REQUEST FOR INFORMATION NOT ADDRESSED IN THIS CCO REMAIN IN FORCE

MARK	DATE	DESCRIPTIONS	BY	CH'D	CCO#
1	03/30/09	SERVICE PLATFORM ELECTRICAL CHANGES	GB	MSO	55
0	06/12/08	SERVICE PLATFORM ELECTRICAL CHANGES	GB	MSO	55

REVISIONS

Caltrans Metric

Gregory Benkovich 6/12/08
REGISTERED STRUCTURAL ENGINEER DATE

REGISTERED PROFESSIONAL ENGINEER Gregory Benkovich No. C40518 Exp. 3/31/09 CIVIL STATE OF CALIFORNIA

PLANS APPROVAL DATE

PARSONS BRINCKERHOFF QUADE & DOUGLAS, INC.
303 SECOND STREET, SUITE 700 N
SAN FRANCISCO, CA 94107

The State of California or its officers or agents shall not be responsible for the accuracy or completeness of electronic copies of this plan sheet.

Caltrans now has a web site! To get to the web site, go to http://www.dot.ca.gov

CONTRACT CHANGE ORDER NO. _____
SHEET _____ OF _____

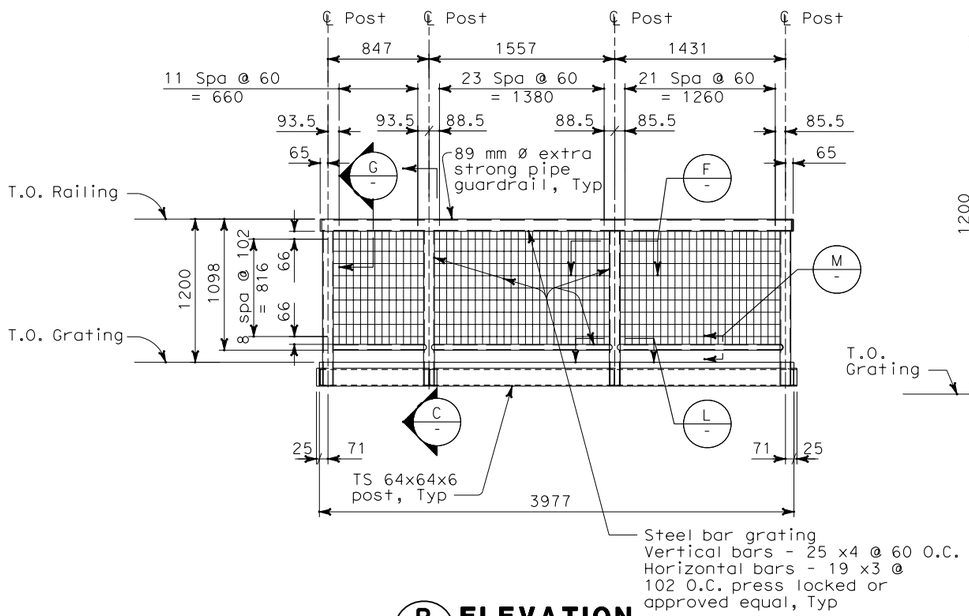

B / AS-12 ELEVATION
SCALE: 1:25

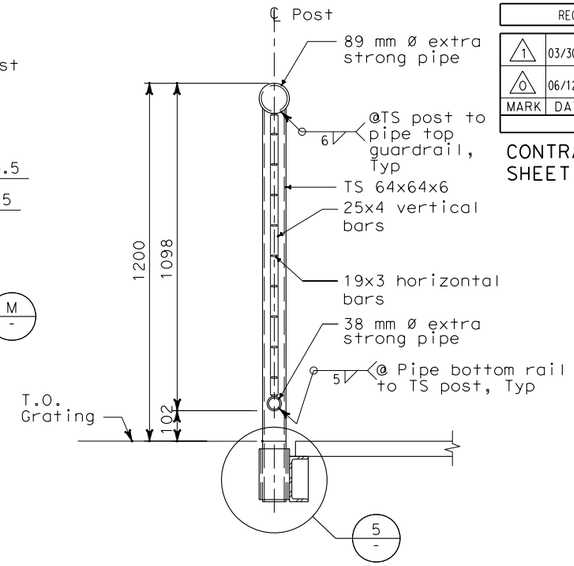

C / AS-12 SECTION
SCALE: 1:10

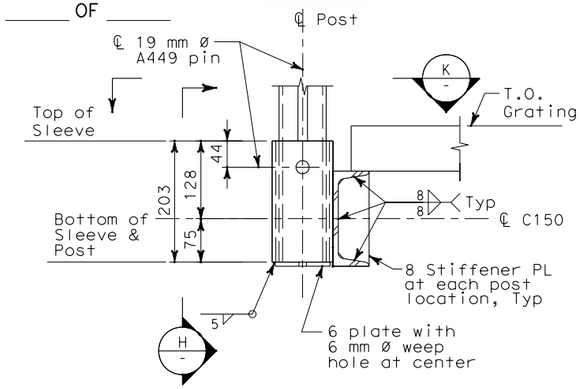

5 / - DETAIL
SCALE: 1:5

NOTES:

1. The contractor shall verify all controlling field dimensions before ordering or fabricating any material.
2. For structural notes, see sheet AS-1.
3. For framing member sizes see sheet No. AS-12.

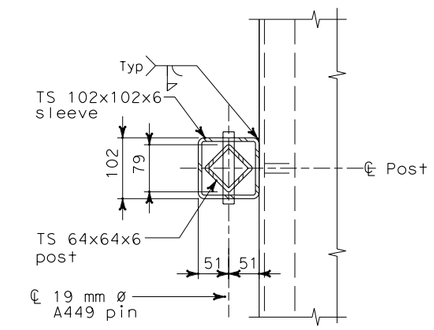

K / - SECTION
SCALE: 1:5

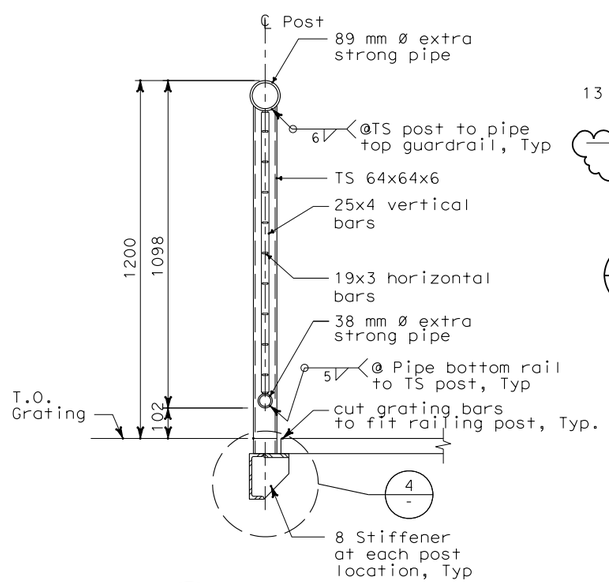

D / AS-12 SECTION
SCALE: 1:10

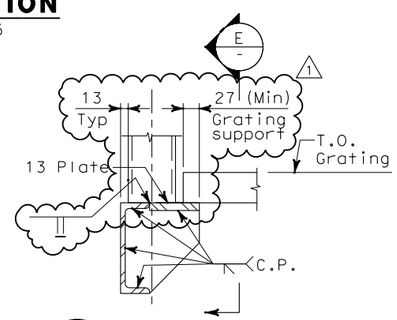

4 / - DETAIL
SCALE: 1:5

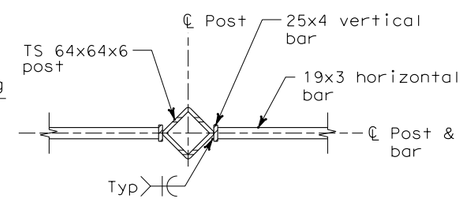

F / AS-12 SECTION
SCALE: 1:5

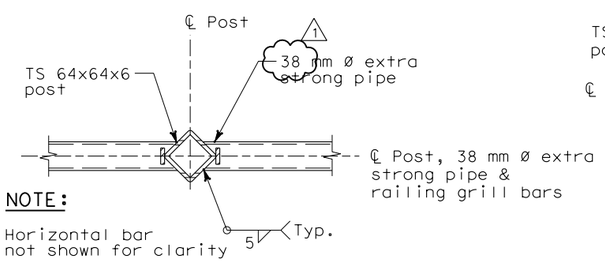

NOTE:
Horizontal bar not shown for clarity

L / - SECTION
SCALE: 1:5

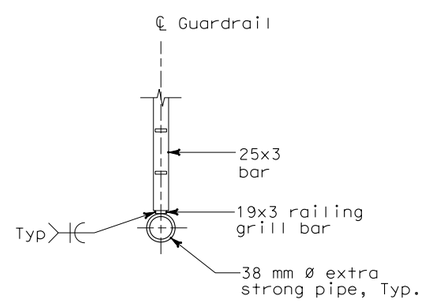

M / - SECTION
SCALE: 1:5

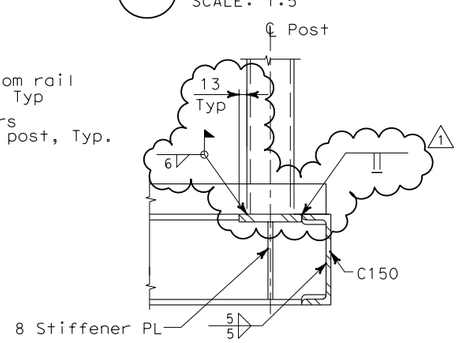

E / - SECTION
SCALE: 1:5

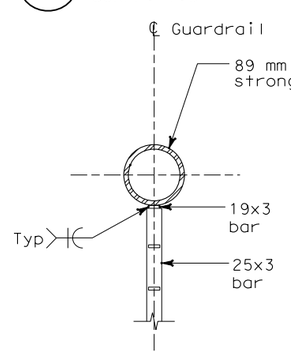

G / AS-12 SECTION
SCALE: 1:5

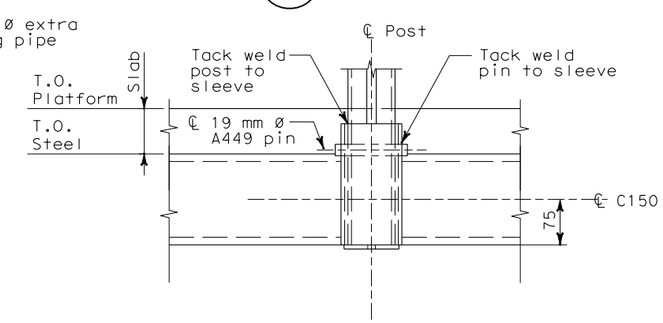

H / - SECTION
SCALE: 1:5

ALL DIMENSIONS ARE IN MILLIMETERS UNLESS OTHERWISE SHOWN

Bob Zandipour, DESIGN OVERSIGHT	DESIGN	BY E. Lucas	CHECKED M. S. Owyang
4-14-04, SIGN OFF DATE	LAYOUT	BY L. Reyes	CHECKED M. S. Owyang
	QUANTITIES	BY I. Horton	CHECKED P. McNamee

PREPARED FOR THE STATE OF CALIFORNIA DEPARTMENT OF TRANSPORTATION

Brady Nadell, PROJECT ENGINEER

BRIDGE NO. 34-0006
KILOMETER POST 13.2/13.9

SAS SUPERSTRUCTURE
PULL BOX SUPPORT PLAN, SECTIONS AND DETAILS

AS-12A

ORIGINAL SCALE IN MILLIMETERS FOR REDUCED PLANS 0 10 20 30 40 50 60 70 80 90 100

CU 04251
EA 0120F1

DISREGARD PRINTS BEARING EARLIER REVISION DATES

REVISION DATES (PRELIMINARY STAGE ONLY) SHEET OF

DGN FILE => T:\13103\MS\pse\SAS Struc\CCO\SAS CCO55\04-0120f1_0082S01R01.dgn
USERNAME => garciar

DATE PLOTTED => 4/1/2009 TIME PLOTTED => 7:40:10 AM

DIST	COUNTY	ROUTE	KILOMETER POST TOTAL PROJECT	SHEET No	TOTAL SHEETS
04	SF	80	13.2/13.9	83R2	1204

Caltrans Metric

REGISTERED CIVIL ENGINEER 4/02/04

12-6-04
PLANS APPROVAL DATE

REGISTERED PROFESSIONAL ENGINEER Mee Shing Owyang No. 24960 Exp. 12/31/05 CIVIL STATE OF CALIFORNIA

The State of California or its officers or agents shall not be responsible for the accuracy or completeness of electronic copies of this plan sheet.

Parsons Brinckerhoff Quade & Douglas, Inc.
303 Second Street, Suite 700N
San Francisco, CA 94107

Caltrans now has a web site! To get to the web site, go to: http://www.dot.ca.gov

REQUEST FOR INFORMATION NOT ADDRESSED IN THIS CCO REMAIN IN FORCE

MARK	DATE	DESCRIPTIONS	BY	CH'D	CCO#
2	03/30/09	SERVICE PLATFORM ELECTRICAL CHANGES	NK	MSO	55
1	03/04/08	BARRIER MODIFICATIONS.	EL	MI	44

REVISIONS

CONTRACT CHANGE ORDER NO. _____
SHEET _____ OF _____

NOTES:

1. The contractor shall verify all controlling field dimensions before ordering or fabricating any material.
2. For structural notes, see sheet AS-1.
3. For electrical panel support locations, see electrical plans.
4. For callbox locations, see electrical sheets, sheet E-397.
5. Unless otherwise noted, all framing elements are L76x76x6.4.
6. For electrical enclosure support, use Unistrut P2000 or approved equal. Attach to frame per manufacturer's recommendations. Locate to suit.

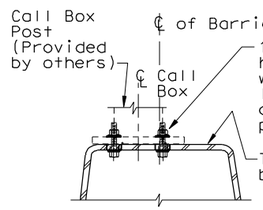

D / - **SECTION**
NO SCALE

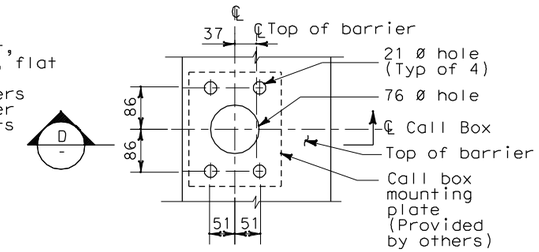

CALL BOX ON ROADWAY METAL BARRIER

1 / AS-2 **DETAIL**
NO SCALE

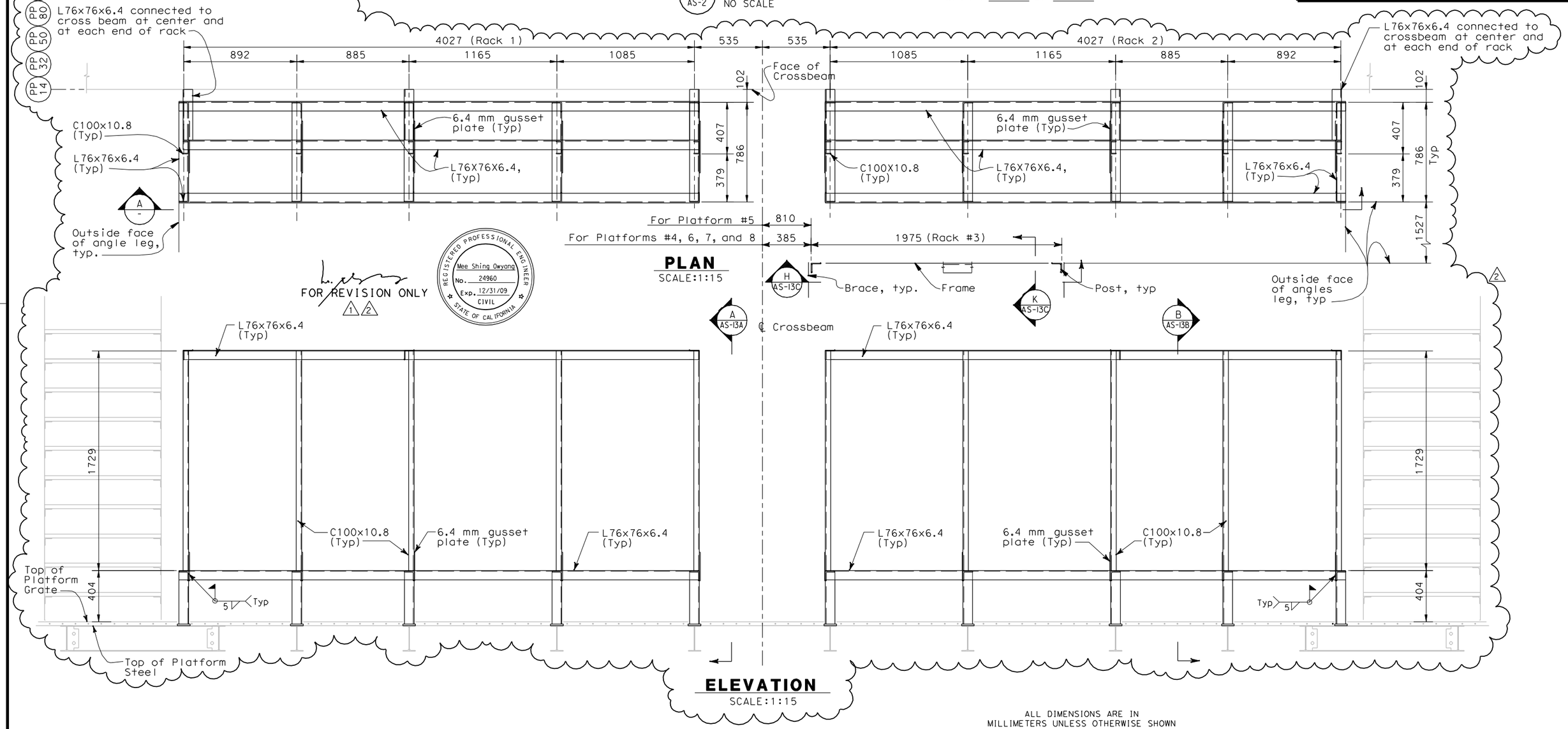

FOR REVISION ONLY 1 2

REGISTERED PROFESSIONAL ENGINEER Mee Shing Owyang No. 24960 Exp. 12/31/09 CIVIL STATE OF CALIFORNIA

PLAN
SCALE:1:15

ELEVATION
SCALE:1:15

ALL DIMENSIONS ARE IN MILLIMETERS UNLESS OTHERWISE SHOWN

BoB Zandipour
DESIGN OVERSIGHT

SIGN OFF DATE

	BY	CHECKED
DESIGN	G. Benkovich	M. S. Owyang
DETAILS	L. Reyes	M. S. Owyang
QUANTITIES		

PREPARED FOR THE STATE OF CALIFORNIA DEPARTMENT OF TRANSPORTATION

PROJECT ENGINEER

BRIDGE NO. 34-0006
KILOMETER POST 13.2/13.9

SAS SUPERSTRUCTURE
ELECTRICAL PANEL SUPPORT SECTIONS
AS-13

DESIGN DETAIL SHEET (METRIC) (REV. 3/1/98)

ORIGINAL SCALE IN MILLIMETERS FOR REDUCED PLANS 0 10 20 30 40 50 60 70 80 90 100

CU 04251
EA 0120F1

DISREGARD PRINTS BEARING EARLIER REVISION DATES

REVISION DATES (PRELIMINARY STAGE ONLY)

SHEET OF

FILE => T:\13103\MS\pse\SAS Struc\CCO\SAS CCO55\04-0120f1_0083R02.dgn

USERNAME => llorico DATE PLOTTED => 4/2/2009 TIME PLOTTED => 3:26:00 PM

$FREQUEST

DIST	COUNTY	ROUTE	KILOMETER POST TOTAL PROJECT	SHEET No	TOTAL SHEETS
04	SF	80	13.2/13.9	83S1	1204

REGISTERED CIVIL ENGINEER 3/30/09

PLANS APPROVAL DATE

REGISTERED PROFESSIONAL ENGINEER Mee Shing Owyong No. 24960 Exp. 12/31/09 CIVIL STATE OF CALIFORNIA

The State of California or its officers or agents shall not be responsible for the accuracy or completeness of electronic copies of this plan sheet.

PB AMERICAS, Inc.
303 Second Street, Suite 700N
San Francisco, CA 94107

Caltrans now has a web site! To get to the web site, go to: http://www.dot.ca.gov

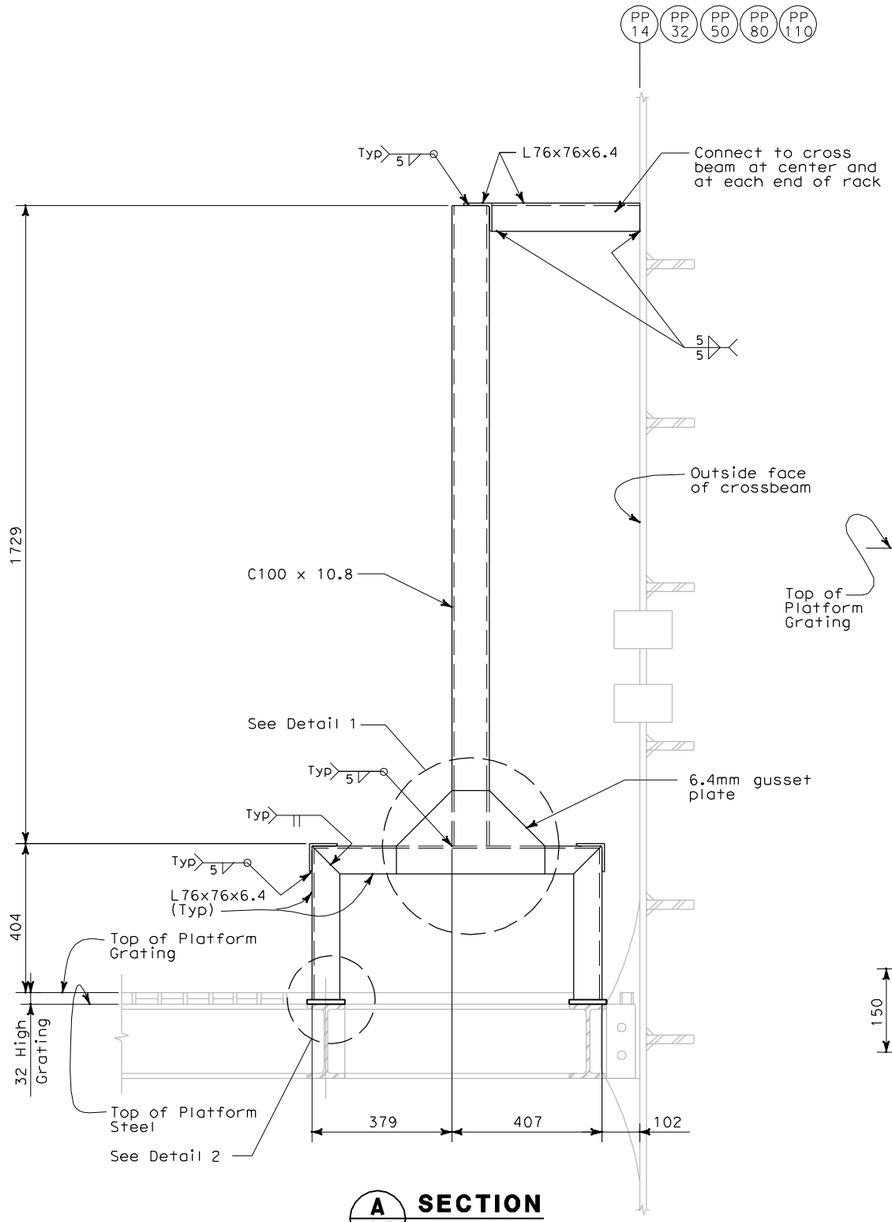

A AS-13 SECTION
NOT TO SCALE

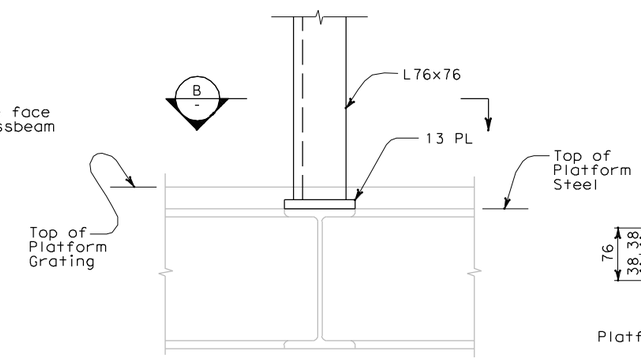

2 - DETAIL
NOT TO SCALE

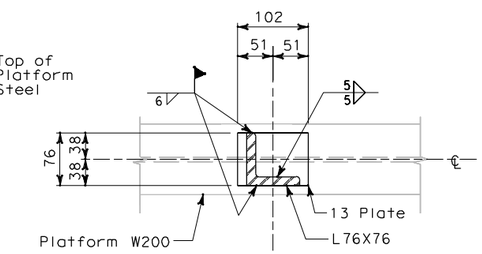

B - SECTION
NOT TO SCALE

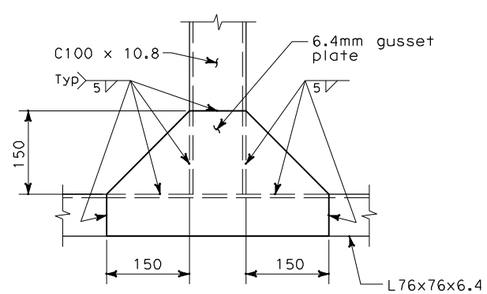

1 - DETAIL
NOT TO SCALE

NOTES:

1. The contractor shall verify all controlling field dimensions before ordering or fabricating any material.
2. For structural notes, see sheet AS-1.
3. Contractor has the option to perform welds shown on this drawing in the shop or the field.

REQUEST FOR INFORMATION NOT ADDRESSED IN THIS CCO REMAIN IN FORCE

MARK	DATE	DESCRIPTIONS	BY	CH'D	CCO#
0	03/30/09	SERVICE PLATFORM ELECTRICAL CHANGES	NK	MSO	55

REVISIONS

CONTRACT CHANGE ORDER NO._____
SHEET _____ OF _____

ALL DIMENSIONS ARE IN MILLIMETERS UNLESS OTHERWISE SHOWN

Bob Zandipour
DESIGN OVERSIGHT

SIGN OFF DATE

	BY	CHECKED
DESIGN	G. Benkovich	M. S. Owyang
DETAILS	L. Reyes	M. S. Owyang
QUANTITIES		

PREPARED FOR THE STATE OF CALIFORNIA DEPARTMENT OF TRANSPORTATION

PROJECT ENGINEER

BRIDGE NO. 34-0006
KILOMETER POST 13.2/13.9

SAS SUPERSTRUCTURE

ELECTRICAL PANEL SUPPORT SECTIONS SHEET 1

AS-13A

DESIGN DETAIL SHEET (METRIC) (REV. 3/1/98)

ORIGINAL SCALE IN MILLIMETERS FOR REDUCED PLANS 0 10 20 30 40 50 60 70 80 90 100

CU 04251
EA 0120F1

DISREGARD PRINTS BEARING EARLIER REVISION DATES

REVISION DATES (PRELIMINARY STAGE ONLY) SHEET OF

FILE => T:\13103\MS\pse\SAS Struc\CCO\SAS CC055\04-0120f1_0083S01.dgn

USERNAME => llorico DATE PLOTTED => 4/2/2009 TIME PLOTTED => 3:27:04 PM

$FREQUEST

DIST	COUNTY	ROUTE	KILOMETER POST TOTAL PROJECT	SHEET No	TOTAL SHEETS
04	SF	80	13.2/13.9	83S2	1204

REGISTERED CIVIL ENGINEER 3/30/09

PLANS APPROVAL DATE

REGISTERED PROFESSIONAL ENGINEER Mee Shing Owyang No. 24960 Exp. 12/31/09 CIVIL STATE OF CALIFORNIA

The State of California or its officers or agents shall not be responsible for the accuracy or completeness of electronic copies of this plan sheet.

PB AMERICAS, Inc.
303 Second Street, Suite 700N
San Francisco, CA 94107

Caltrans now has a web site! To get to the web site, go to: http://www.dot.ca.gov

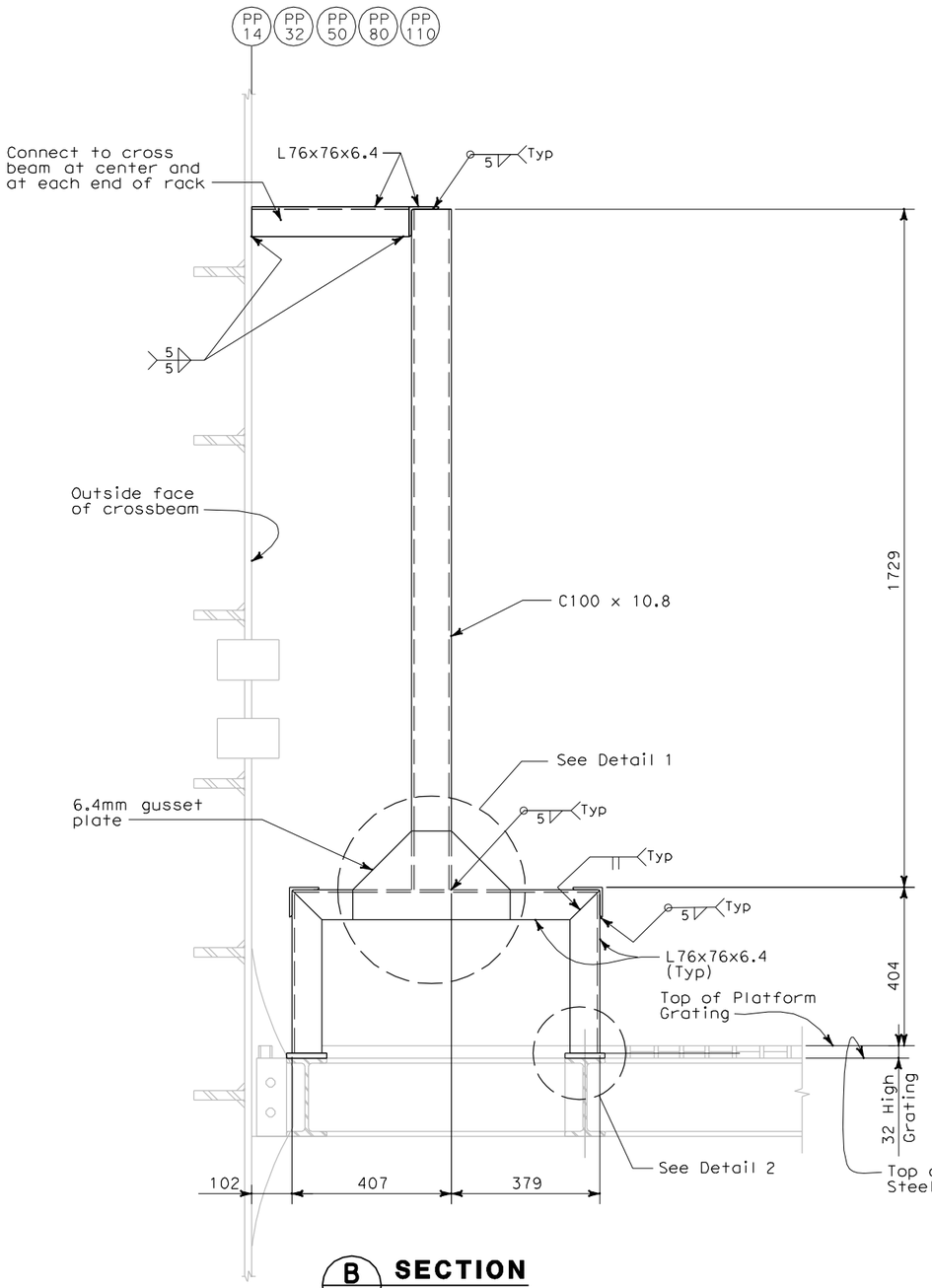

B / AS-13 **SECTION**
NOT TO SCALE

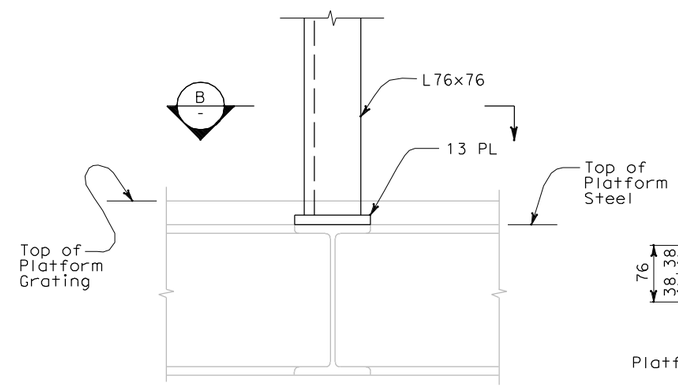

2 / - **DETAIL**
NOT TO SCALE

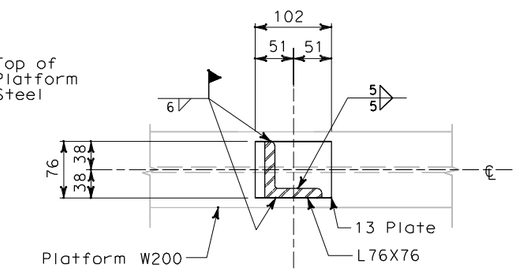

B / - **SECTION**
NOT TO SCALE

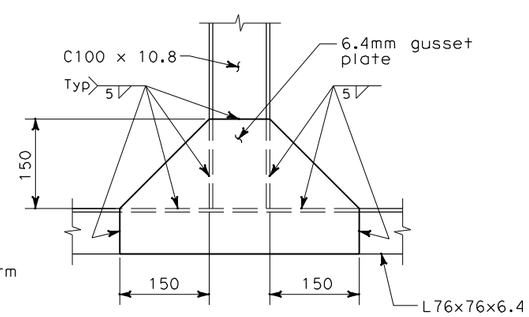

1 / - **DETAIL**
NOT TO SCALE

NOTES:

1. The contractor shall verify all controlling field dimensions before ordering or fabricating any material.
2. For structural notes, see sheet AS-1.
3. Contractor has the option to perform welds shown on this drawing in the shop or the field.

REQUEST FOR INFORMATION NOT ADDRESSED IN THIS CCO REMAIN IN FORCE

MARK	DATE	DESCRIPTIONS	BY	CH'D	CCO#
0	03/30/09	SERVICE PLATFORM ELECTRICAL CHANGES	NK	MSO	55

REVISIONS

CONTRACT CHANGE ORDER NO._____
SHEET _____ OF _____

ALL DIMENSIONS ARE IN MILLIMETERS UNLESS OTHERWISE SHOWN

Bob Zandipour
DESIGN OVERSIGHT

SIGN OFF DATE

	BY	CHECKED
DESIGN	G. Benkovich	M. S. Owyang
DETAILS	L. Reyes	M. S. Owyang
QUANTITIES		

PREPARED FOR THE STATE OF CALIFORNIA DEPARTMENT OF TRANSPORTATION

PROJECT ENGINEER

BRIDGE NO. 34-0006
KILOMETER POST 13.2/13.9

SAS SUPERSTRUCTURE
ELECTRICAL PANEL SUPPORT SECTIONS SHEET 2

AS-13B

SHEET ___ OF ___

DESIGN DETAIL SHEET (METRIC) (REV. 3/1/98)

ORIGINAL SCALE IN MILLIMETERS FOR REDUCED PLANS 0 10 20 30 40 50 60 70 80 90 100

CU 04251
EA 0120F1

DISREGARD PRINTS BEARING EARLIER REVISION DATES

REVISION DATES (PRELIMINARY STAGE ONLY)

FILE => T:\13103\MS\pse\SAS Struc\CCO\SAS CCO55\04-0120f1_0083S02.dgn

USERNAME => llorico DATE PLOTTED => 4/2/2009 TIME PLOTTED => 3:27:39 PM

$FREQUEST

DIST	COUNTY	ROUTE	KILOMETER POST TOTAL PROJECT	SHEET No	TOTAL SHEETS
04	SF	80	13.2/13.9	83S3	1204

Caltrans Metric

Gregory Benkovich 6/12/08
REGISTERED CIVIL ENGINEER

PLANS APPROVAL DATE

REGISTERED PROFESSIONAL ENGINEER — Gregory Benkovich No. 40518 Exp. 3/31/09 CIVIL — STATE OF CALIFORNIA

The State of California or its officers or agents shall not be responsible for the accuracy or completeness of electronic copies of this plan sheet.

PB AMERICAS, Inc.
303 Second Street, Suite 700N
San Francisco, CA 94107

Caltrans now has a web site! To get to the web site, go to: http://www.dot.ca.gov

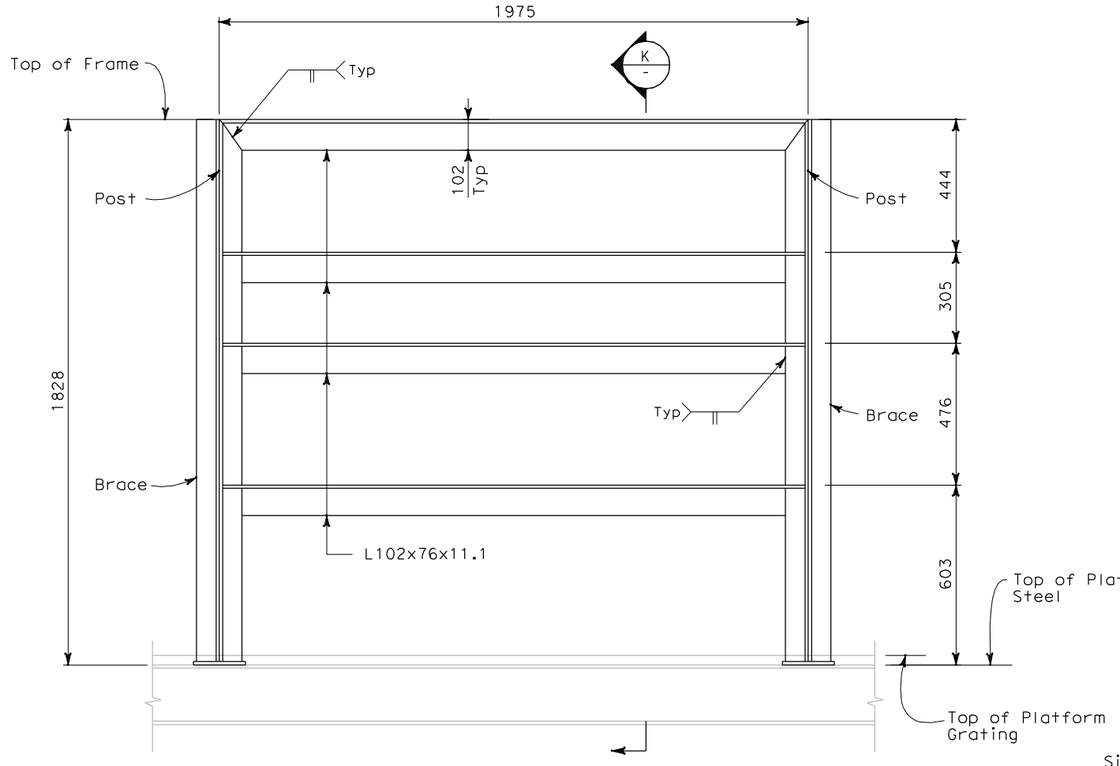

RACK #3 (TRANSFORMER & CIRCUIT BREAKER)

H / AS-13 SECTION
NOT TO SCALE

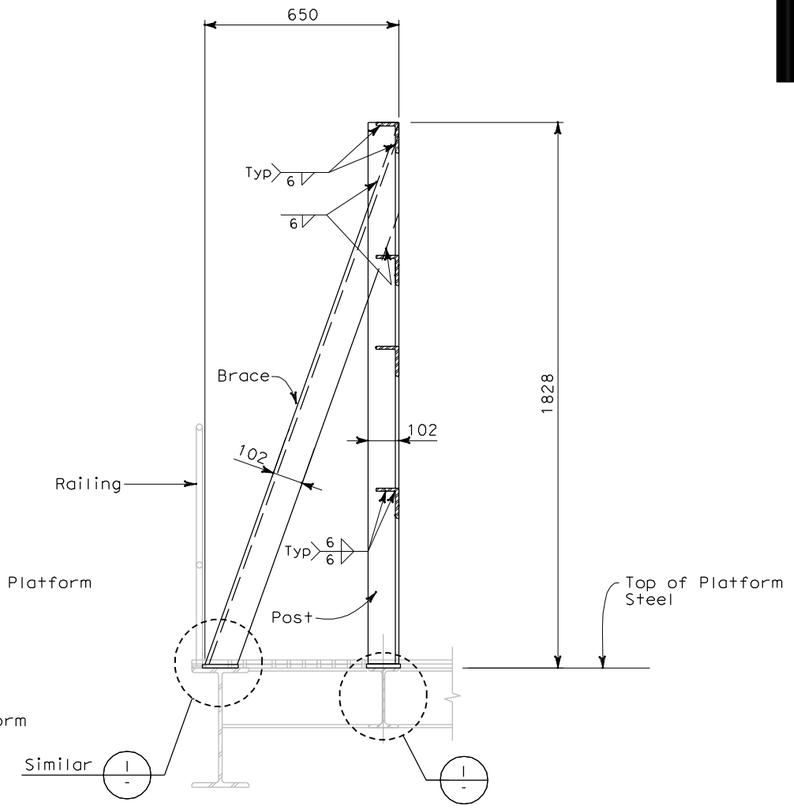

K / AS-13 SECTION
NOT TO SCALE

NOTES:

1. The contractor shall verify all controlling field dimensions before ordering or fabricating any material.
2. For structural notes, see sheet AS-1.
3. Unless otherwise noted, all framing elements are L102x76x13.
4. Contractor has the option to perform welds shown on this drawing in the shop or in the field.

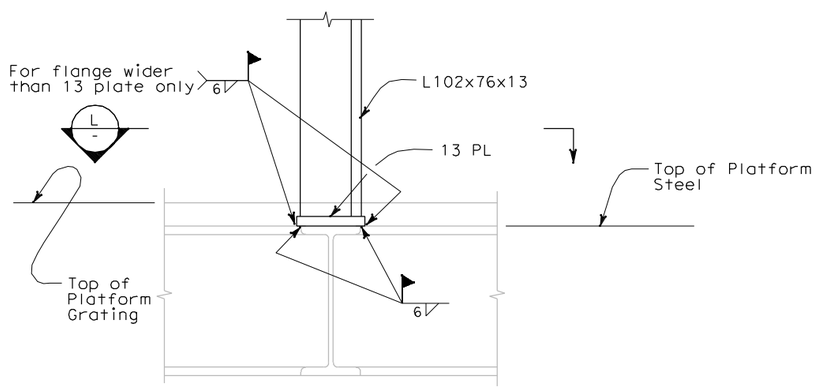

I / - DETAIL
NOT TO SCALE

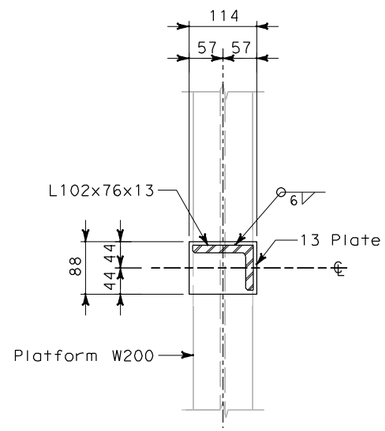

L / - SECTION
NOT TO SCALE

REQUEST FOR INFORMATION NOT ADDRESSED IN THIS CCO REMAIN IN FORCE					
0	03/30/09	SERVICE PLATFORM ELECTRICAL CHANGES	GB	MSO	55
MARK	DATE	DESCRIPTIONS	BY	CH'D	CCO#
REVISIONS					

CONTRACT CHANGE ORDER NO._____
SHEET _____ OF _____

ALL DIMENSIONS ARE IN MILLIMETERS UNLESS OTHERWISE SHOWN

Bob Zandipour
DESIGN OVERSIGHT

SIGN OFF DATE

	BY	CHECKED
DESIGN	G. Benkovich	M. S. Owyang
DETAILS	L. Reyes	M. S. Owyang
QUANTITIES		

PREPARED FOR THE STATE OF CALIFORNIA DEPARTMENT OF TRANSPORTATION

PROJECT ENGINEER

BRIDGE NO. 34-0006
KILOMETER POST 13.2/13.9

SAS SUPERSTRUCTURE
ELECTRICAL PANEL SUPPORT SECTIONS SHEET 3

AS-13C

DESIGN DETAIL SHEET (METRIC) (REV. 3/1/98)

ORIGINAL SCALE IN MILLIMETERS FOR REDUCED PLANS 0 10 20 30 40 50 60 70 80 90 100

CU 04251
EA 0120F1

DISREGARD PRINTS BEARING EARLIER REVISION DATES

REVISION DATES (PRELIMINARY STAGE ONLY) SHEET OF

FILE => T:\13103\MS\pse\SAS Struc\CCO\SAS CCO55\04-0120f1_0083S03.dgn

$FREQUEST

USERNAME => llorico DATE PLOTTED => 4/2/2009 TIME PLOTTED => 3:28:20 PM

DIST	COUNTY	ROUTE	KILOMETER POST TOTAL PROJECT	SHEET No	TOTAL SHEETS
04	SF	80	13.2/13.9	111 R1	1204

REGISTERED ELECTRICAL ENGINEER 12/19/02 DATE

12-6-04
PLANS APPROVAL DATE

REGISTERED PROFESSIONAL ENGINEER JENS ERLINGSSON No. 8249 Exp. 9/30/06 ELECTRICAL STATE OF CALIFORNIA

PB POWER, Inc.
A Parsons Brinckerhoff Company
303 Second St., Suite 700N
San Francisco, CA 94107-1317

The State of California or its officers or agents shall not be responsible for the accuracy or completeness of electronic copies of this plan sheet.

Caltrans now has a web site! To get to the web site, go to http://www.dot.ca.gov

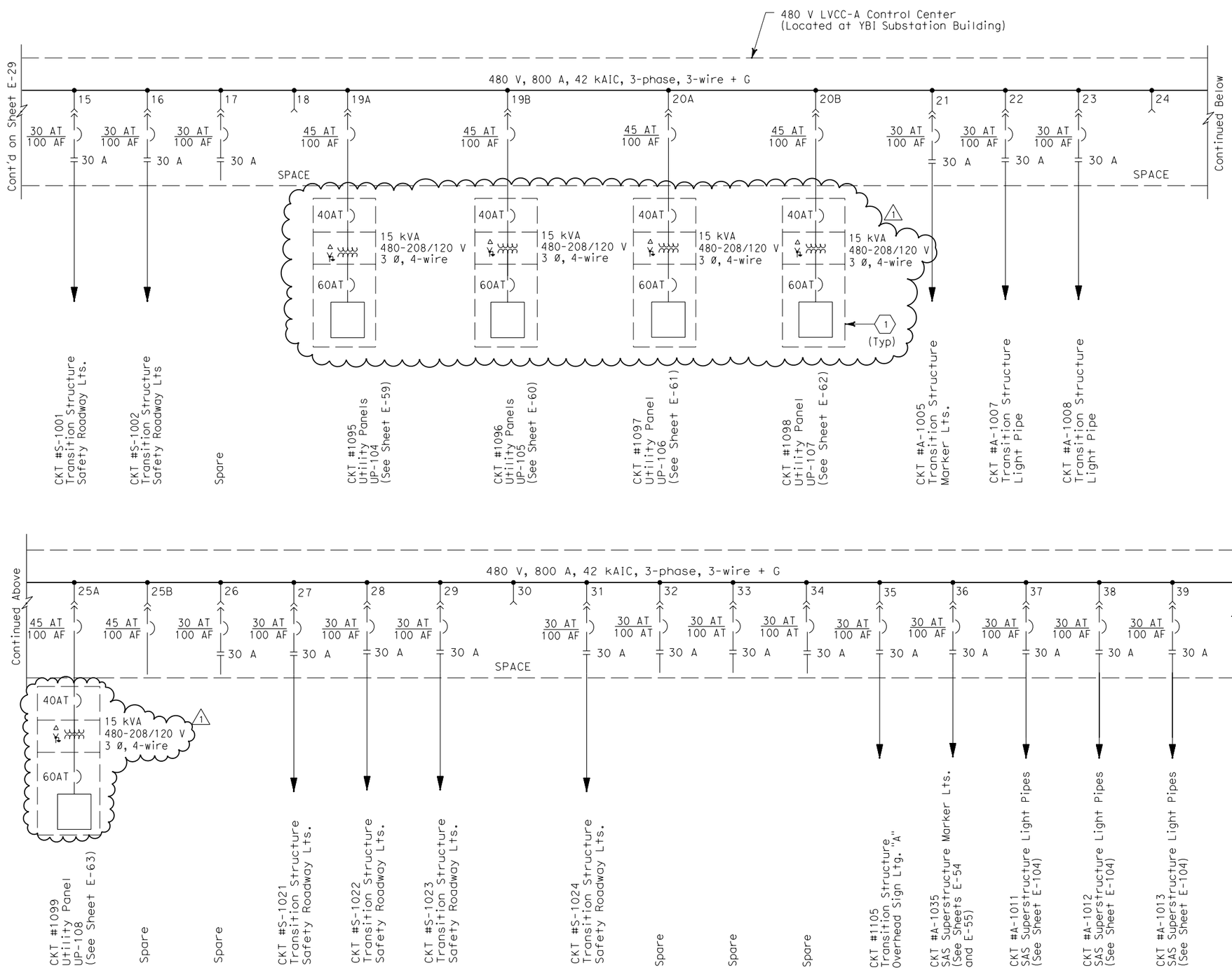

SHEET NOTE:

(1) Enclosed in a Nema 4X enclosure located on the service platform.

NOTE:

1. Single line diagram as shown does not represent physical separation of different contracts. Refer to other drawings for physical separation of different contracts.

REGISTERED PROFESSIONAL ENGINEER FADI WALIEDDINE No. 11465 Exp. 12/31/2009 ELECTRICAL STATE OF CALIFORNIA

FOR REVISION ONLY (1)

REQUEST FOR INFORMATION NOT ADDRESSED IN THIS CCO REMAIN IN FORCE					
1	03/30/09	SERVICE PLATFORM ELECTRICAL CHANGES	JD MP	RG FW	55
MARK	DATE	DESCRIPTIONS	BY	CH'D	CCO#
REVISIONS					

CONTRACT CHANGE ORDER NO._____
SHEET _____ OF _____

DETAILS
YBI SUBSTATION
480 V LVCC-A SINGLE LINE DIAGRAM
NO SCALE

E-30

CALCULATED/ DESIGNED BY	EJL	DATE 9/01	REVISED BY
CHECKED BY	JE	12/01	DATE REVISED

DESIGN OVERSIGHT
BEHZAD GOLEMOHAMMADI

STATE OF CALIFORNIA - DEPARTMENT OF TRANSPORTATION
Caltrans

THIS PLAN ACCURATE FOR ELECTRICAL WORK ONLY.

LAST REVISION 00-00-00
DATE PLOTTED => 3/31/2009
TIME PLOTTED => 3:09:38 PM

FOR REDUCED PLANS ORIGINAL SCALE IS IN MILLIMETERS 0 20 40 60 80

DGN FILE =>T:\13103\MS\pse\SAS Struc\CCO\SAS CCO55\04-0120f1_0111R01.dgn
USERNAME =>garciar

CU 04251 EA 0120F1

DIST	COUNTY	ROUTE	KILOMETER POST TOTAL PROJECT	SHEET No	TOTAL SHEETS
04	SF	80	13.2/13.9	113 R1	1204

REGISTERED ELECTRICAL ENGINEER 12/19/02 DATE

12-6-04
PLANS APPROVAL DATE

REGISTERED PROFESSIONAL ENGINEER JENS ERLINGSSON No. 8249 Exp. 9/30/06 ELECTRICAL STATE OF CALIFORNIA

PB POWER, Inc.
A Parsons Brinckerhoff Company
303 Second St., Suite 700N
San Francisco, CA 94107-1317

The State of California or its officers or agents shall not be responsible for the accuracy or completeness of electronic copies of this plan sheet.

Caltrans now has a web site! To get to the web site, go to http://www.dot.ca.gov

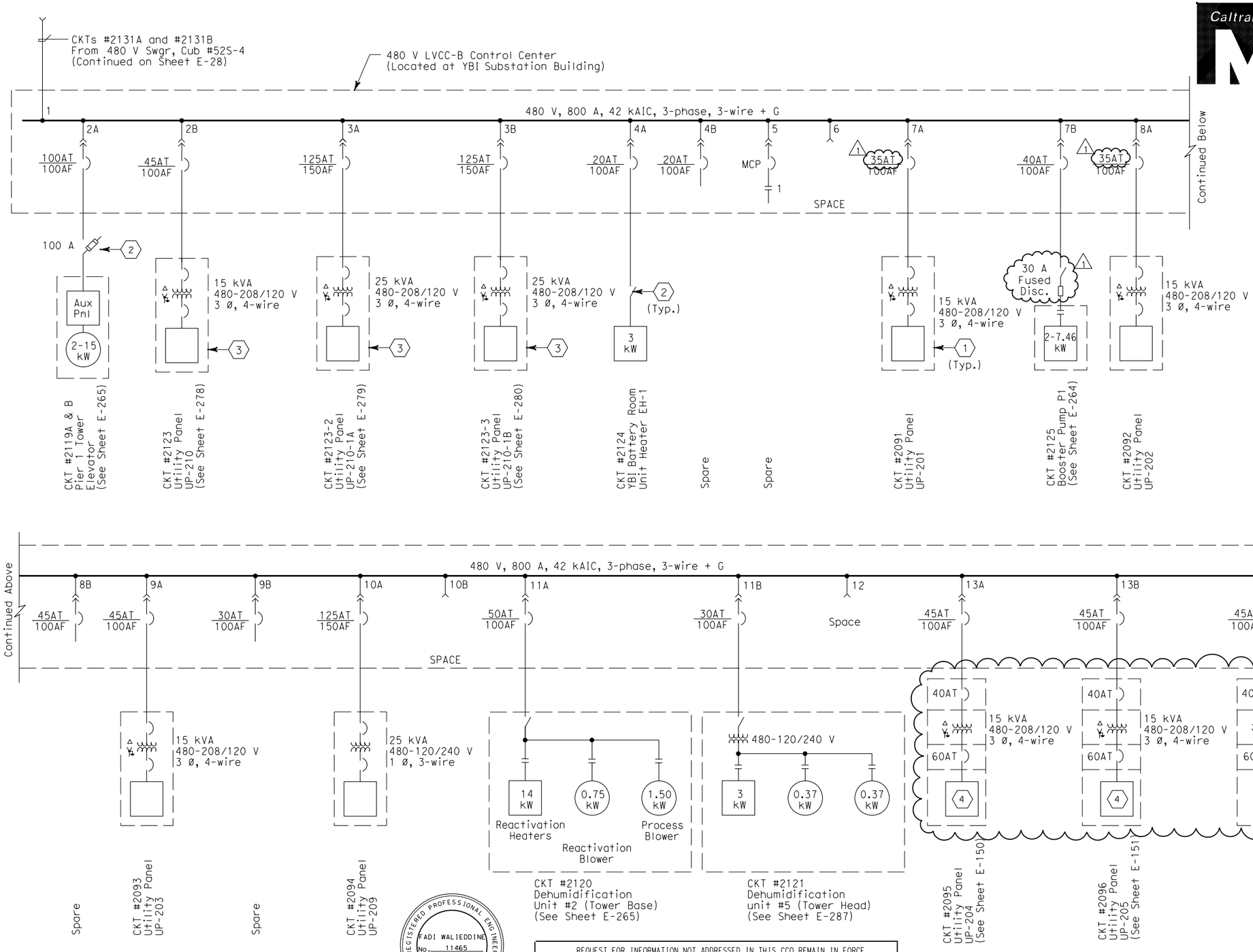

SHEET NOTES:

1. Enclosed in a Nema 4X enclosure located on the service platform.
2. Safety disconnect switch shall be horsepower rated.
3. Enclosed in a fiberglass enclosure located on Pier 1 (Tower).
4. Electrical Panel with Main Lugs Only.

NOTES:

1. Single line diagram as shown does not represent physical separation of different contracts. Refer to other drawings for physical separation of different contracts.
2. The combination starter unit and thermal magnetic circuit breakers shall be suitable for and coordinated for 42,000 RMS system fault current.

REGISTERED PROFESSIONAL ENGINEER FADI WALIEDDINE No. 11465 Exp. 12/31/2009 ELECTRICAL STATE OF CALIFORNIA

FOR REVISION ONLY 1

REQUEST FOR INFORMATION NOT ADDRESSED IN THIS CCO REMAIN IN FORCE

MARK	DATE	DESCRIPTIONS	BY	CH'D	CCO#
1	03/30/09	SERVICE PLATFORM ELECTRICAL CHANGES	RR MP	RG FW	55

REVISIONS

CONTRACT CHANGE ORDER NO._____
SHEET_____ OF _____

DETAILS
YBI SUBSTATION
480 V LVCC-B SINGLE LINE DIAGRAM
NO SCALE

E-32

THIS PLAN ACCURATE FOR ELECTRICAL WORK ONLY.

CALCULATED/ DESIGNED BY	EJL	DATE 9-01	REVISED BY
CHECKED BY	JE	12/01	DATE REVISED

DESIGN OVERSIGHT
BEHZAD GOLEMOHAMMADI

STATE OF CALIFORNIA - DEPARTMENT OF TRANSPORTATION
Caltrans

FOR REDUCED PLANS ORIGINAL SCALE IS IN MILLIMETERS 0 20 40 60 80

DGN FILE =>T:\13103\MS\pse\SAS Struc\CCO\SAS CC055\04-0120f1_01 3R01.dgn
USERNAME =>garciar

CU 04251 EA 0120F1

LAST REVISION 00-00-00
DATE PLOTTED => 3/31/2009
TIME PLOTTED => 3:09:08 PM

DIST	COUNTY	ROUTE	KILOMETER POST TOTAL PROJECT	SHEET No	TOTAL SHEETS
04	SF	80	13.2/13.9	114 R1	1204

Jens Erlingsson 12/19/02
REGISTERED ELECTRICAL ENGINEER DATE

12-6-04
PLANS APPROVAL DATE

REGISTERED PROFESSIONAL ENGINEER JENS ERLINGSSON No. 8249 Exp. 9/30/06 ELECTRICAL STATE OF CALIFORNIA

PB POWER, Inc.
A Parsons Brinckerhoff Company
303 Second St., Suite 700N
San Francisco, CA 94107-1317

The State of California or its officers or agents shall not be responsible for the accuracy or completeness of electronic copies of this plan sheet.

Caltrans now has a web site! To get to the web site, go to http://www.dot.ca.gov

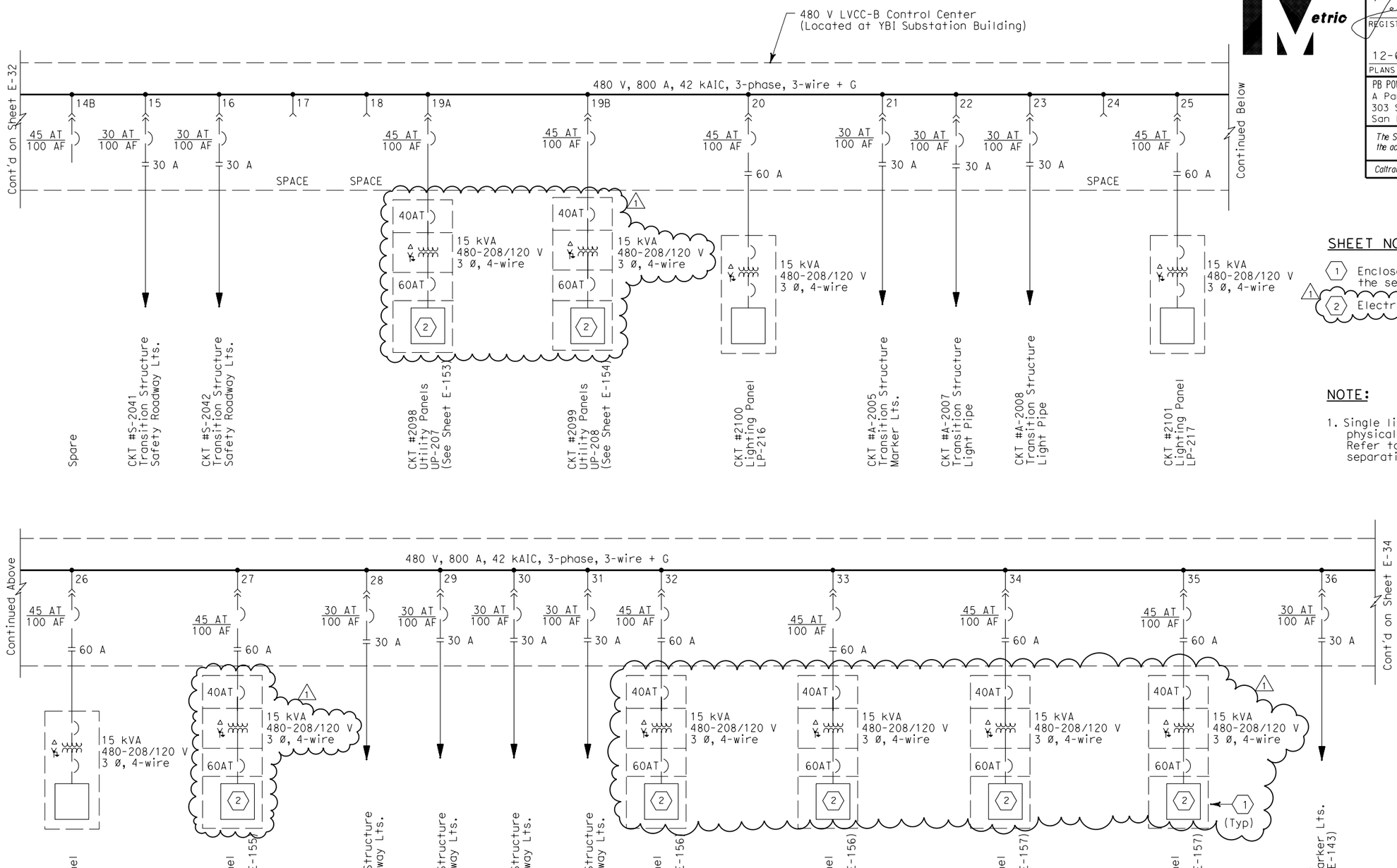

SHEET NOTE:

1. Enclosed in a Nema 4X enclosure located on the service platform.
2. Electrical Panel with Main Lugs Only.

NOTE:

1. Single line diagram as shown does not represent physical separation of different contracts. Refer to other drawings for physical separation of different contracts.

REGISTERED PROFESSIONAL ENGINEER FADI WALIEDDINE No. 11465 Exp. 12/31/2009 ELECTRICAL STATE OF CALIFORNIA

FOR REVISION ONLY 1

REQUEST FOR INFORMATION NOT ADDRESSED IN THIS CCO REMAIN IN FORCE

MARK	DATE	DESCRIPTIONS	BY	CH'D	CCO#
1	03/30/09	SERVICE PLATFORM ELECTRICAL CHANGES	RR MP	RG FW	55

REVISIONS

CONTRACT CHANGE ORDER NO._____
SHEET_____ OF_____

DETAILS
YBI SUBSTATION
480 V LVCC-B SINGLE LINE DIAGRAM
NO SCALE

E-33

STATE OF CALIFORNIA - DEPARTMENT OF TRANSPORTATION
Caltrans

DESIGN OVERSIGHT
BEHZAD GOLEMOHAMMADI

CALCULATED/DESIGNED BY EJL DATE 9-01 REVISED BY
CHECKED BY JE 12/01 DATE REVISED

LAST REVISION 00-00-00 DATE PLOTTED => 3/31/2009 TIME PLOTTED => 3:07:36 PM

FOR REDUCED PLANS ORIGINAL SCALE IS IN MILLIMETERS 0 20 40 60 80
DGN FILE =>T:\13103\MS\pse\SAS Struc\CCO\SAS CC055\04-0120f1_0114R01.dgn
USERNAME =>garciar
CU 04251
EA 0120F1

DIST	COUNTY	ROUTE	KILOMETER POST TOTAL PROJECT	SHEET No	TOTAL SHEETS
04	SF	80	13.2/13.9	126 R1	1204

REGISTERED ELECTRICAL ENGINEER 12/19/02 DATE

12-6-04
PLANS APPROVAL DATE

REGISTERED PROFESSIONAL ENGINEER JENS ERLINGSSON No. 8249 Exp. 9/30/06 ELECTRICAL STATE OF CALIFORNIA

PB POWER, Inc.
A Parsons Brinckerhoff Company
303 Second St., Suite 700N
San Francisco, CA 94107-1317

The State of California or its officers or agents shall not be responsible for the accuracy or completeness of electronic copies of this plan sheet.

Caltrans now has a web site! To get to the web site, go to http://www.dot.ca.gov

Caltrans Metric

UTILITY PANEL UP-104 (CKT #1095)

Location: SAS SUPERSTRUCTURE SERVICE PLATFORM 4

LOAD DESCRIPTION	LTG	REC	OTH.	CB		CB	LTG	REC	OTH.	LOAD DESCRIPTION
Spare				20/1	1 A 2	20/1				Spare
Recept (2) Westbound South Barrier		360		20/1	3 B 4	20/1				Spare
Recept (2) Service Platform #4		360		20/1	5 C 6	20/1	820			Crossbeam Ltg (20)
Recept (2) Girder		360		20/1	7 A 8	20/1	984			Girder Lighting (24)
Recept (4) Crossbeam		720		20/1	9 B 10 (1)	30/1			2000	Controller Cabinet #TOS-4WA
Spare				20/1	11 C 12 (1)	30/1			2000	Controller Cabinet #TOS-4WB
TOTAL VA		1800					1804		4000	TOTAL VA

LOAD SUMMARY (INCLUDES .90 PF) (VA)

Lighting (At 100%): 1804
Gen Use (1st 10 kVA at 100% plus 50% of remainder): 5800

TOTAL kVA: 7.604

BALANCE (kVA)

Phase A - 1.344
Phase B - 3.080
Phase C - 3.180

VOLTAGE: 208/120 V
PHASE/WIRES: 3-phase, 4-wire
BUS RATING: 100 A
MAIN: 60 A
MOUNTING: Surface
K.A.I.C.: 10

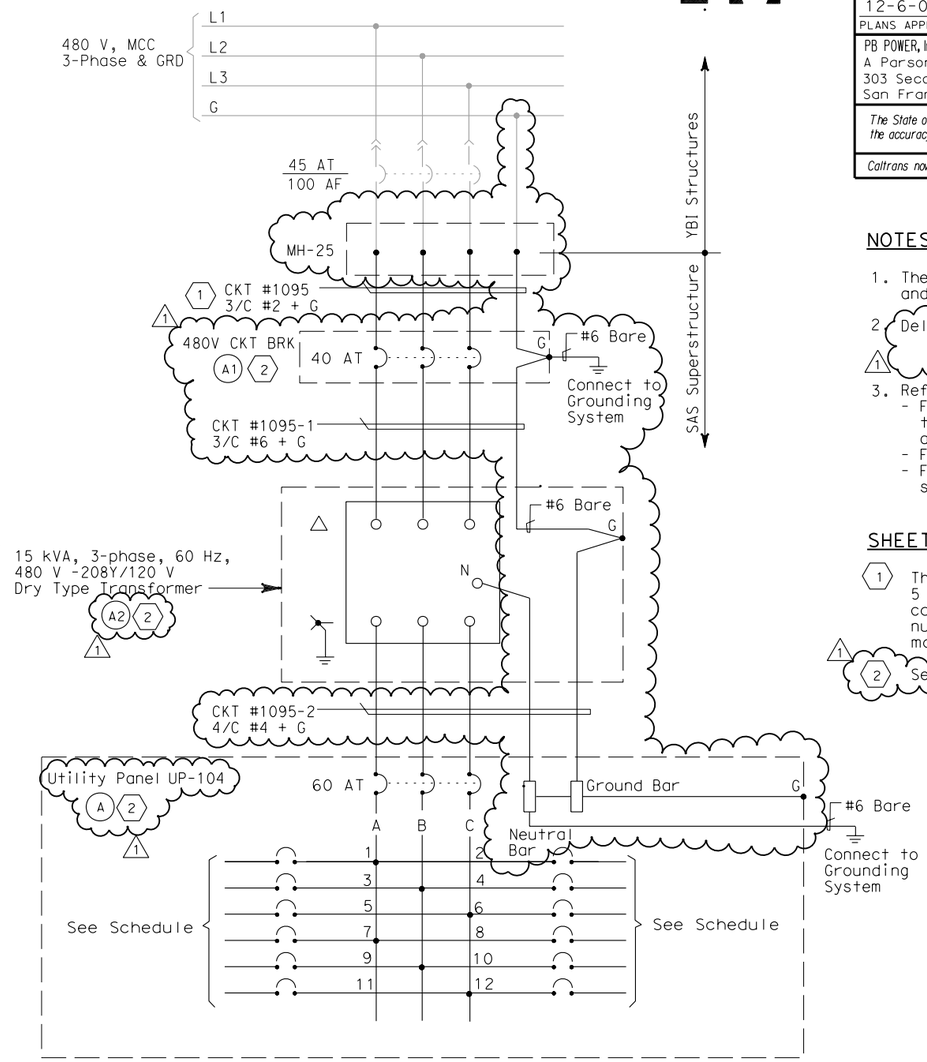

NOTES:

1. The Contractor shall provide nameplates and circuit schedules as shown.
2. Deleted.
3. References:
   - For circuit and conduit/cable tray schedules, see sheets starting at E-401.
   - For pull box schedule, see sheet E-83.
   - For crossbeam lighting plan, see sheet E-119.

SHEET NOTES:

1. The Contractor shall extend and coil 5 meters of cable in manhole 25. All cables shall be tagged with circuit numbers as shown. For location of manhole 25, see sheet E-11.
2. See sheet E-71 for Equipment Schedule.

REGISTERED PROFESSIONAL ENGINEER FADI WALIEDDINE No. 11465 Exp. 12/31/2009 ELECTRICAL STATE OF CALIFORNIA

FOR REVISION ONLY

REQUEST FOR INFORMATION NOT ADDRESSED IN THIS CCO REMAIN IN FORCE					
1	03/30/09	SERVICE PLATFORM ELECTRICAL CHANGES	RR MP	RG FW	55
MARK	DATE	DESCRIPTIONS	BY	CH'D	CCO#
REVISIONS					

CONTRACT CHANGE ORDER NO._____
SHEET_____ OF _____

DETAILS
SAS SUPERSTRUCTURE ROADWAY WESTBOUND PANEL UP-104 SCHEDULE

E-59

STATE OF CALIFORNIA - DEPARTMENT OF TRANSPORTATION
Caltrans

DESIGN OVERSIGHT
BEHZAD GOLEMOHAMMADI

CALCULATED/ DESIGNED BY	JP	DATE 8/01	REVISED BY	DATE REVISED
CHECKED BY	BL	12/01		

LAST REVISION 00-00-00
DATE PLOTTED => 3/31/2009
TIME PLOTTED => 3:08:34 PM

FOR REDUCED PLANS ORIGINAL SCALE IS IN MILLIMETERS 0 20 40 60 80

DGN FILE =>T:\13103\MS\pse\SAS Struc\CCO\SAS CCO55\04-0120f1_0126R01.dgn
USERNAME =>garciar

CU 04251

EA 0120F1

DIST	COUNTY	ROUTE	KILOMETER POST TOTAL PROJECT	SHEET No	TOTAL SHEETS
04	SF	80	13.2/13.9	127 R2	1204

REGISTERED ELECTRICAL ENGINEER 12/19/02 DATE

12-6-04
PLANS APPROVAL DATE

REGISTERED PROFESSIONAL ENGINEER JENS ERLINGSSON No. 8249 Exp. 9/30/06 ELECTRICAL STATE OF CALIFORNIA

PB POWER, Inc.
A Parsons Brinckerhoff Company
303 Second St., Suite 700N
San Francisco, CA 94107-1317

The State of California or its officers or agents shall not be responsible for the accuracy or completeness of electronic copies of this plan sheet.

Caltrans now has a web site! To get to the web site, go to http://www.dot.ca.gov

Caltrans Metric

UTILITY PANEL UP-105 (CKT #1096)

Location: SAS SUPERSTRUCTURE SERVICE PLATFORM 5

LOAD DESCRIPTION	LTG	REC	OTH.	CB		CB	LTG	REC	OTH.	LOAD DESCRIPTION
Spare				20/1	1 A 2	20/1				Spare
Recept (2) Westbound South Barrier		360		20/1	3 B 4	20/1				Spare
Recept (2) Service Platform #5		360		20/1	5 C 6	20/1				Spare
Recept (2) Girder		360		20/1	7 A 8	20/1	738			Girder Lighting (18)
Recept (4) Crossbeams		720		20/1	9 B 10	20/1	820			Crossbeam Ltg (20)
RTU #10W (PLC Power Supply)			100	20/1	11 C 12	20/1			900	Strong Motion Recorder #2 Box A
RTU #10W (Lighting & Receptacle)	105	180	150	20/1	13 A 14	20/1			300	Strong Motion Recorder #2 Box B
Navigation Relay Cabinet #NAP-5			600	20/1	15 B 16	20/1				Spare
Spare				20/1	17 C 18	20/1				
				20/1	19 A 20	20/1				
				20/1	21 B 22	20/1				
				20/1	23 C 24	20/1				
TOTAL VA	105	1980	850				1558		1200	TOTAL VA

LOAD SUMMARY (INCLUDES .90 PF)	(VA)
Lighting (At 100%):	1663
Gen Use (1st 10 kVA AT 100% Plus 50% of remainder):	4050
TOTAL kVA:	5.693

BALANCE (kVA)
Phase A - 1.833
Phase B - 2.500
Phase C - 1.360

VOLTAGE: 208Y/120 V
PHASE/WIRES: 3-phase, 4-wire
BUS RATING: 100 A
MAIN: 60 A
MOUNTING: Surface
K.A.I.C.: 10

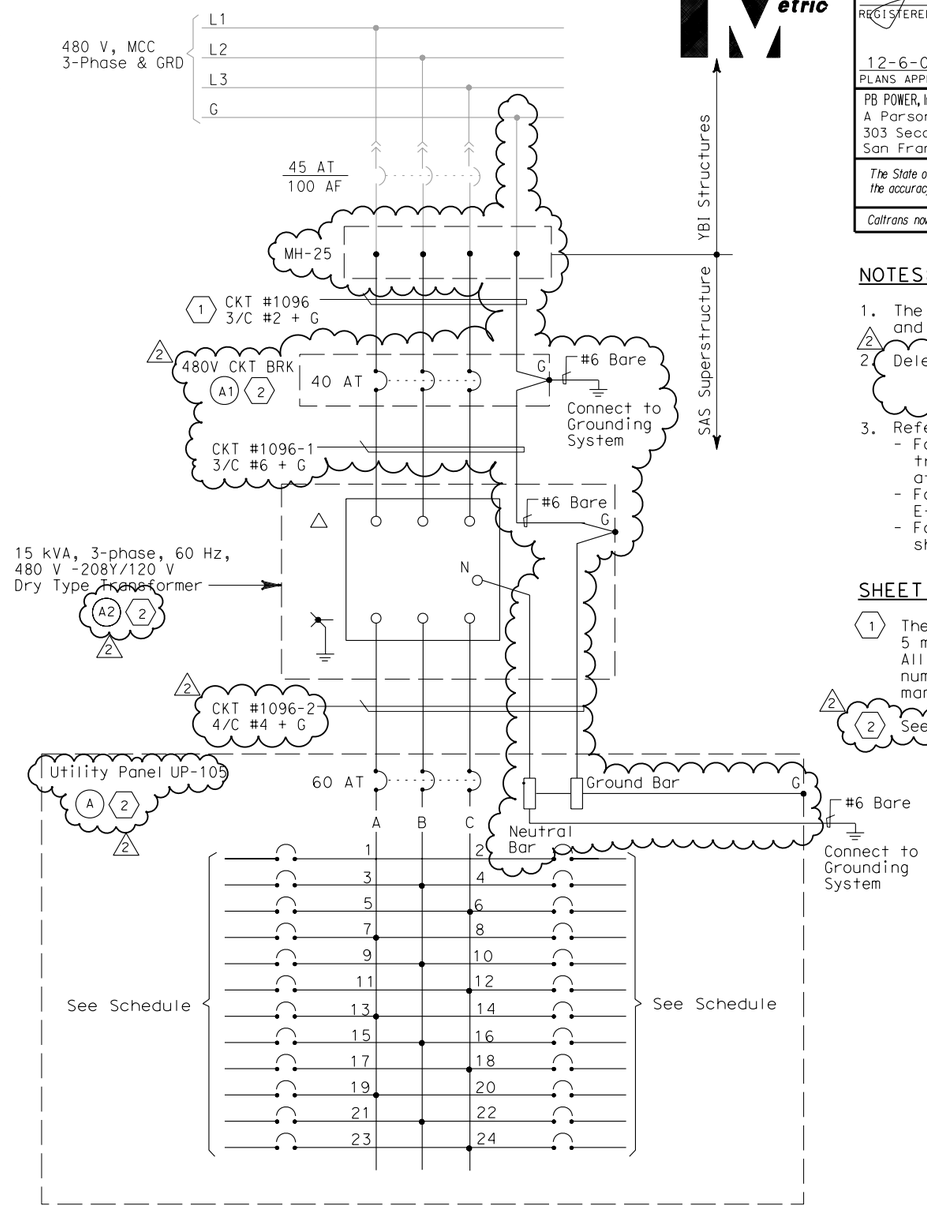

NOTES:

1. The Contractor shall provide nameplates and circuit schedules as shown.
2. Deleted.
3. References:
   - For circuit and conduit/cable tray schedules, see sheets starting at E-401.
   - For pull box schedule, see sheet E-83.
   - For crossbeam lighting plan, see sheet E-119.

SHEET NOTES:

1. The Contractor shall extend and coil 5 meters of cable in manhole 25. All cables shall be tagged with circuit numbers as shown. For location of manhole 25, see sheet E-11.
2. See sheet E-72 for Equipment Schedule.

REGISTERED PROFESSIONAL ENGINEER S. A. ESTOQUE, JR. No. E-10151 Exp. 12/31/2008 ELECTRICAL STATE OF CALIFORNIA

FOR REVISION ONLY (1)

REGISTERED PROFESSIONAL ENGINEER FADI WALIEDDINE No. 11465 Exp. 12/31/2009 ELECTRICAL STATE OF CALIFORNIA

FOR REVISION ONLY (2)

REQUEST FOR INFORMATION NOT ADDRESSED IN THIS CCO REMAIN IN FORCE

MARK	DATE	DESCRIPTIONS	BY	CH'D	CCO#
2	03/30/09	SERVICE PLATFORM ELECTRICAL CHANGES	RR MP	RG FW	55
1	03/04/08	BARRIER MODIFICATIONS	JS BM	RG SE	44

REVISIONS

CONTRACT CHANGE ORDER NO._____
SHEET _____ OF _____

THIS PLAN IS ACCURATE FOR ELECTRICAL WORK ONLY.

DETAILS
SAS SUPERSTRUCTURE ROADWAY WESTBOUND PANEL UP-105 SCHEDULE

E-60

REVISED BY	DATE REVISED
JP	DATE 08/01
BL	11/01

CALCULATED/DESIGNED BY
CHECKED BY

DESIGN OVERSIGHT
BEHZAD GOLEMOHAMMADI

STATE OF CALIFORNIA - DEPARTMENT OF TRANSPORTATION
Caltrans

LAST REVISION 00-00-00
DATE PLOTTED => 3/31/2009
TIME PLOTTED => 3:05:50 PM

FOR REDUCED PLANS ORIGINAL SCALE IS IN MILLIMETERS 0 20 40 60 80

DGN FILE =>T:\13103\MS\pse\SAS Struc\CCO\SAS CC055\04-0120f1_0127R02.dgn
USERNAME =>garciar

CU 04251

EA 0120F1

DIST	COUNTY	ROUTE	KILOMETER POST TOTAL PROJECT	SHEET No	TOTAL SHEETS
04	SF	80	13.2/13.9	128 R1	1204

REGISTERED ELECTRICAL ENGINEER 6/12/08 DATE

12-6-04
PLANS APPROVAL DATE

REGISTERED PROFESSIONAL ENGINEER JENS ERLINGSSON No. 8249 Exp. 9/30/06 ELECTRICAL STATE OF CALIFORNIA

PB POWER, Inc.
A Parsons Brinckerhoff Company
303 Second St., Suite 700N
San Francisco, CA 94107-1317

The State of California or its officers or agents shall not be responsible for the accuracy or completeness of electronic copies of this plan sheet.

Caltrans now has a web site! To get to the web site, go to http://www.dot.ca.gov

Caltrans Metric

UTILITY PANEL UP-106 (CKT #1097)

Location: SAS SUPERSTRUCTURE SERVICE PLATFORM #6

LOAD DESCRIPTION	LTG	REC	OTH.	CB		CB	LTG	REC	OTH.	LOAD DESCRIPTION
Recept (1) Westbound North Barrier		180		20/1	1 A 2	20/1				Spare
Recept (2) Westbound South Barrier		360		20/1	3 B 4	20/1				Spare
Recept (2) Service Platform #6		360		20/1	5 C 6	20/1	820			Crossbeam Ltg (20)
Recept (2) Girder		360		20/1	7 A 8	20/1	1230			Girder Lighting (30)
Recept (5) Crossbeams		720		20/1	9 B 10	30/1 (1)			2000	Controller Cabinet #TOS-6WA
Spare				20/1	11 C 12	20/1				
Spare				20/1	13 A 14	20/1				Spare
Navigation Relay Cabinet #NAP-6W			600	20/1	15 B 16	20/1				Spare
Spare				20/1	17 C 18	20/1				
				20/1	19 A 20	20/1				
Spare				20/1	21 B 22	20/1				Spare
				20/1	23 C 24	20/1				
TOTAL VA		1980	600				2050		2000	TOTAL VA

LOAD SUMMARY (INCLUDES .90 PF) (VA)

Lighting (At 100%): 2050
Gen Use (1st 10 kVA At 100% Plus 50% OF Remainder): 4580

TOTAL kVA: 6.630

BALANCE (kVA)

Phase A - ~~1.770~~
Phase B - 3.680 (1)
Phase C - ~~1.180~~

VOLTAGE: 208/120 V
PHASE/WIRES: 3-phase, 4-wire
BUS RATING: 100 A
MAIN: 60 A
MOUNTING: Surface
K.A.I.C.: 10

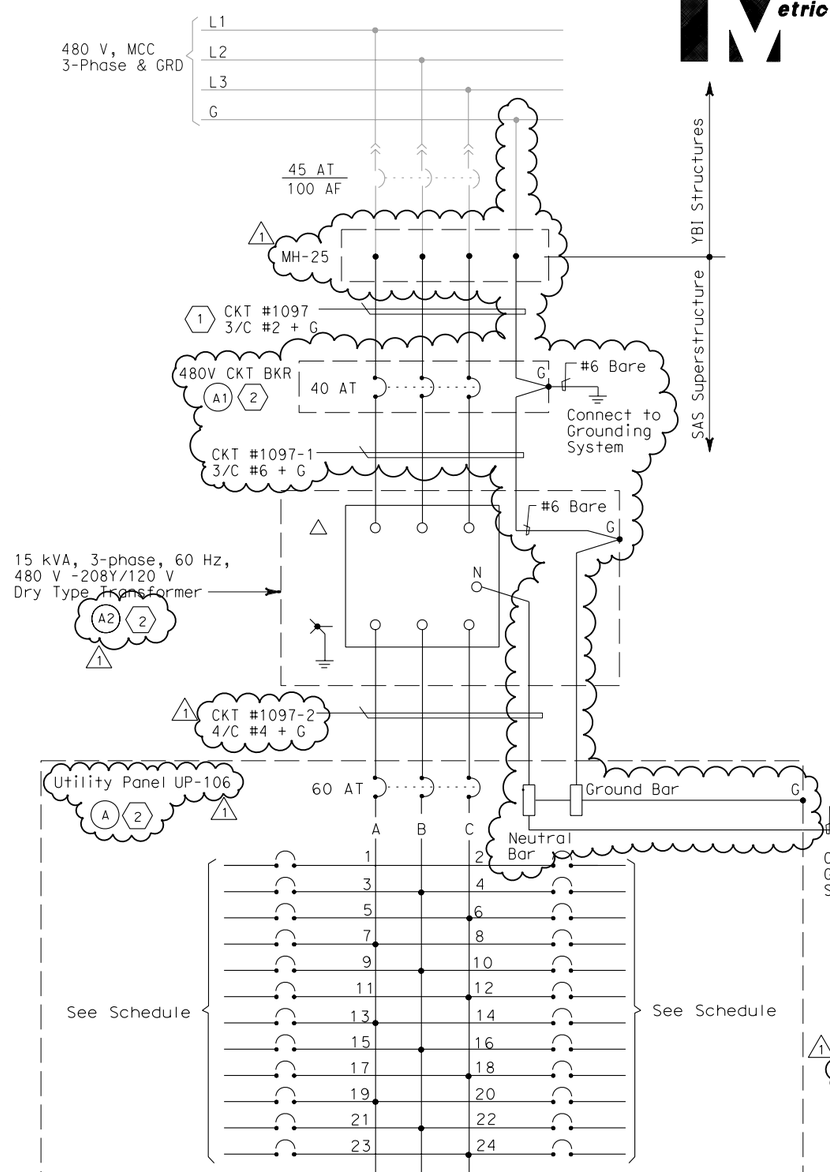

NOTES:

1. The Contractor shall provide nameplates and circuit schedules as shown.
2. Deleted. (1)
3. References:
   - For circuit and conduit/cable tray schedules, see sheets starting at E-401.
   - For pull box schedule, see sheet E-83.
   - For crossbeam lighting plan, see sheet E-119.

SHEET NOTES:

(1) The Contractor shall extend and coil 5 meters of cable in manhole 25. All cables shall be tagged with circuit numbers as shown. For location of manhole 25, see sheet E-11. (1)

(2) See sheet E-73 for Equipment Schedule.

REGISTERED PROFESSIONAL ENGINEER FADI WALIEDDINE No. 11465 Exp. 12/31/2009 ELECTRICAL STATE OF CALIFORNIA

FOR REVISION ONLY (1)

REQUEST FOR INFORMATION NOT ADDRESSED IN THIS CCO REMAIN IN FORCE

MARK	DATE	DESCRIPTIONS	BY	CH'D	CCO#
(1)	03/30/09	SERVICE PLATFORM ELECTRICAL CHANGES	RR MP / RG FW		55

REVISIONS

CONTRACT CHANGE ORDER NO._____
SHEET_____ OF _____

DETAILS
SAS SUPERSTRUCTURE ROADWAY WESTBOUND PANEL UP-106 SCHEDULE

E-61

DATE	REVISED BY
08/01	JP
12/01	BL

CALCULATED/DESIGNED BY
CHECKED BY

DESIGN OVERSIGHT
BEHZAD GOLEMOHAMMADI

STATE OF CALIFORNIA - DEPARTMENT OF TRANSPORTATION
Caltrans

LAST REVISION 00-00-00
DATE PLOTTED => 3/31/2009
TIME PLOTTED => 3:06:50 PM

DIST	COUNTY	ROUTE	KILOMETER POST TOTAL PROJECT	SHEET No	TOTAL SHEETS
04	SF	80	13.2/13.9	129 R1	1204

REGISTERED ELECTRICAL ENGINEER 6/12/08 DATE

12-6-04
PLANS APPROVAL DATE

REGISTERED PROFESSIONAL ENGINEER JENS ERLINGSSON No. 8249 Exp. 9/30/06 ELECTRICAL STATE OF CALIFORNIA

PB POWER, Inc.
A Parsons Brinckerhoff Company
303 Second St., Suite 700N
San Francisco, CA 94107-1317

The State of California or its officers or agents shall not be responsible for the accuracy or completeness of electronic copies of this plan sheet.

Caltrans now has a web site! To get to the web site, go to http://www.dot.ca.gov

Caltrans Metric

UTILITY PANEL UP-107 (CKT #1098)

Location: SAS SUPERSTRUCTURE SERVICE PLATFORM 7

LOAD DESCRIPTION	LTG	REC	OTH.	CB		CB	LTG	REC	OTH.	LOAD DESCRIPTION
Spare				20/1	1 A 2	20/1				Spare
Recept (2) Westbound South Barrier		360		20/1	3 B 4	20/1				Spare
Recept (2) Service Platform #7		360		20/1	5 C 6	20/1	820			Crossbeam Ltg (20)
Recept (2) Girder		360		20/1	7 A 8	20/1	1230			Girder Lighting (30)
Recept (4) Crossbeams		720		20/1	9 B 10 (1)	30/1			2000	Controller Cabinet #TOS-7WA
Spare				20/1	11 C 12	20/1				Spare
TOTAL VA		1800					2050		2000	TOTAL VA

LOAD SUMMARY (INCLUDES .90 PF) (VA)

Lighting (At 100%): 1558
Gen Use (1st 10 kVA at 100% Plus 50% of Remainder): 3800

TOTAL kVA: 5.850

BALANCE (kVA)

Phase A - 1.590
Phase B - 3.080
Phase C - 1.180

VOLTAGE: 208/120 V
PHASE/WIRES: 3-phase, 4-wire
BUS RATING: 100 A
MAIN: 60 A
MOUNTING: Surface
K.A.I.C.: 10

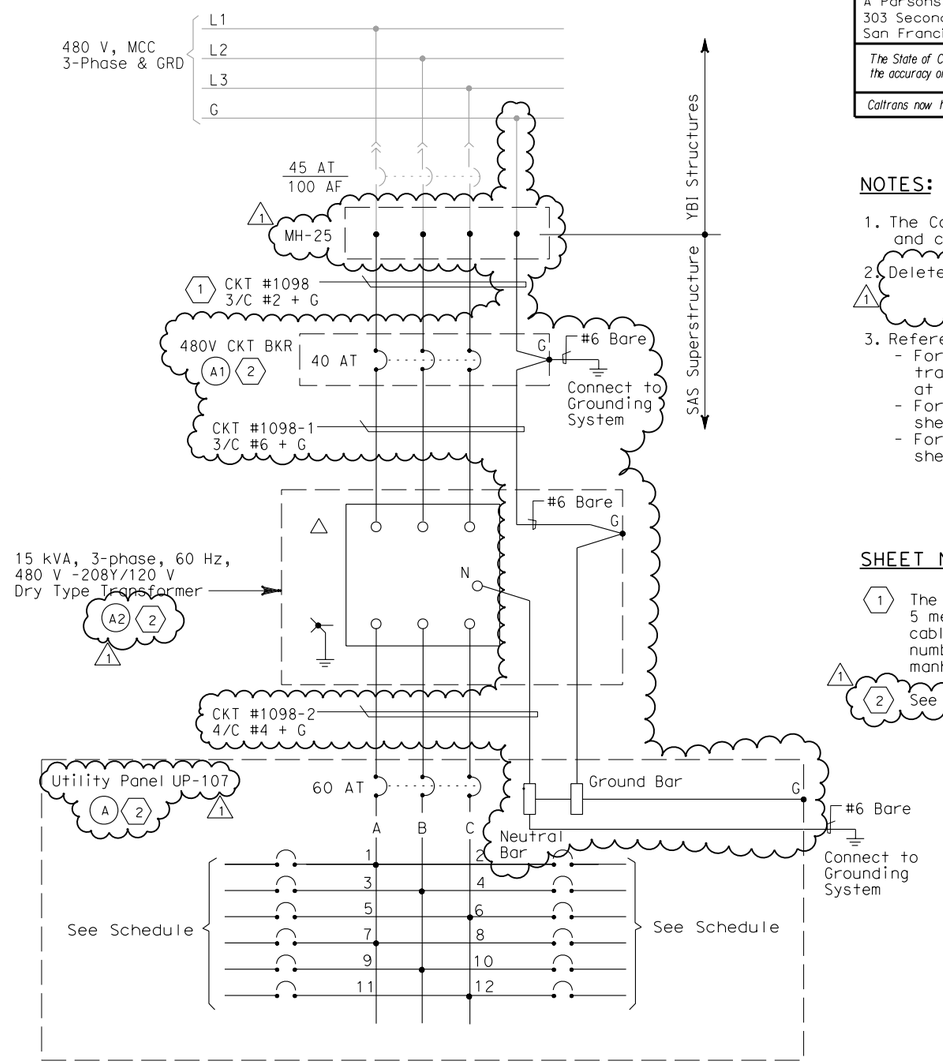

NOTES:

1. The Contractor shall provide nameplates and circuit schedules as shown.
2. Deleted.
3. References:
   - For circuit and conduit/cable tray schedules, see sheets starting at E-401.
   - For pull box schedule, see sheet E-83.
   - For crossbeam lighting plan, see sheet E-119.

SHEET NOTES:

(1) The Contractor shall extend and coil 5 meters of cable in manhole 25. All cables shall be tagged with circuit numbers as shown. For location of manhole 25, see sheet E-11.

(2) See sheet E-74 for Equipment Schedule.

REGISTERED PROFESSIONAL ENGINEER FADI WALIEDDINE No. 11465 Exp. 12/31/2009 ELECTRICAL STATE OF CALIFORNIA

FOR REVISION ONLY (1)

REQUEST FOR INFORMATION NOT ADDRESSED IN THIS CCO REMAIN IN FORCE

MARK	DATE	DESCRIPTIONS	BY	CH'D	CCO#
(1)	03/30/09	SERVICE PLATFORM ELECTRICAL CHANGES	RR MP	RG FW	55

REVISIONS

CONTRACT CHANGE ORDER NO._____
SHEET_____ OF _____

DETAILS
SAS SUPERSTRUCTURE ROADWAY WESTBOUND PANEL UP-107 SCHEDULE
NO SCALE

E-62

STATE OF CALIFORNIA - DEPARTMENT OF TRANSPORTATION
Caltrans

DESIGN OVERSIGHT: BEHZAD GOLEMOHAMMADI

CALCULATED/DESIGNED BY: JP — DATE 08/01
CHECKED BY: BL — 11/01
REVISED BY — DATE REVISED

LAST REVISION 00-00-00
DATE PLOTTED => 3/31/2009
TIME PLOTTED => 3:05:12 PM

FOR REDUCED PLANS ORIGINAL SCALE IS IN MILLIMETERS 0 20 40 60 80

DGN FILE =>T:\13103\MS\pse\SAS Struc\CCO\SAS CC055\04-0120f1_0129R01.dgn
USERNAME =>garciar

CU 04251 | EA 0120F1

DIST	COUNTY	ROUTE	KILOMETER POST TOTAL PROJECT	SHEET No	TOTAL SHEETS
04	SF	80	13.2/13.9	130 R2	1204

REGISTERED ELECTRICAL ENGINEER 12/19/02 DATE

12-6-04
PLANS APPROVAL DATE

REGISTERED PROFESSIONAL ENGINEER JENS ERLINGSSON No. 8249 Exp. 9/30/06 ELECTRICAL STATE OF CALIFORNIA

PB POWER, Inc.
A Parsons Brinckerhoff Company
303 Second St., Suite 700N
San Francisco, CA 94107-1317

The State of California or its officers or agents shall not be responsible for the accuracy or completeness of electronic copies of this plan sheet.

Caltrans now has a web site! To get to the web site, go to http://www.dot.ca.gov

Caltrans Metric

UTILITY PANEL UP-108 (CKT #1099)

Location: SAS SUPERSTRUCTURE SERVICE PLATFORM 8

LOAD DESCRIPTION	LTG	REC	OTH.	CB		CB	LTG	REC	OTH.	LOAD DESCRIPTION
Recept (1) Westbound North Barrier		180		20/1	1 A 2	20/1			10	CB-143A
Recept (3) Westbound South Barrier		540		20/1	3 B 4	20/1			10	CB-143B
Recept (2) Service Platform #8		360		20/1	5 C 6	20/1				Spare
Recept (3) Girder		540		20/1	7 A 8	20/1	984			Girder Ltg. (24)
Recept (6) Crossbeams		1080		20/1	9 B 10	20/1	738			Crossbeam Ltg (20)
RTU #11W (Lighting & Receptacle)	105	180	150	20/1	11 C 12	20/1	820			Crossbeam Ltg (20)
Recept (1) Crossbeams		180		20/1	13 A 14	20/1				Spare
Spare				20/1	15 B 16	20/1				Spare
RTU #11W (PLC Power Supply)			100	20/1	17 C 18	20/1				
Spare				20/1	19 A 20	20/1				
				20/1	21 B 22	20/1				
				20/1	23 C 24	20/1				
TOTAL VA	105	3060	250				2542		20	TOTAL VA

LOAD SUMMARY (INCLUDES .90 PF) (VA)

Lighting (At 100%): 2647
Gen Use (1st 10 kVA AT 100% Plus 50% of remainder): 3330

TOTAL kVA: 5.977

BALANCE (kVA)

Phase A - 1.894
Phase B - 2.368
Phase C - 1.715

VOLTAGE: 208Y/120 V
PHASE/WIRES: 3-phase, 4-wire
BUS RATING: 100 A
MAIN: 60 A
MOUNTING: Surface
K.A.I.C.: 10

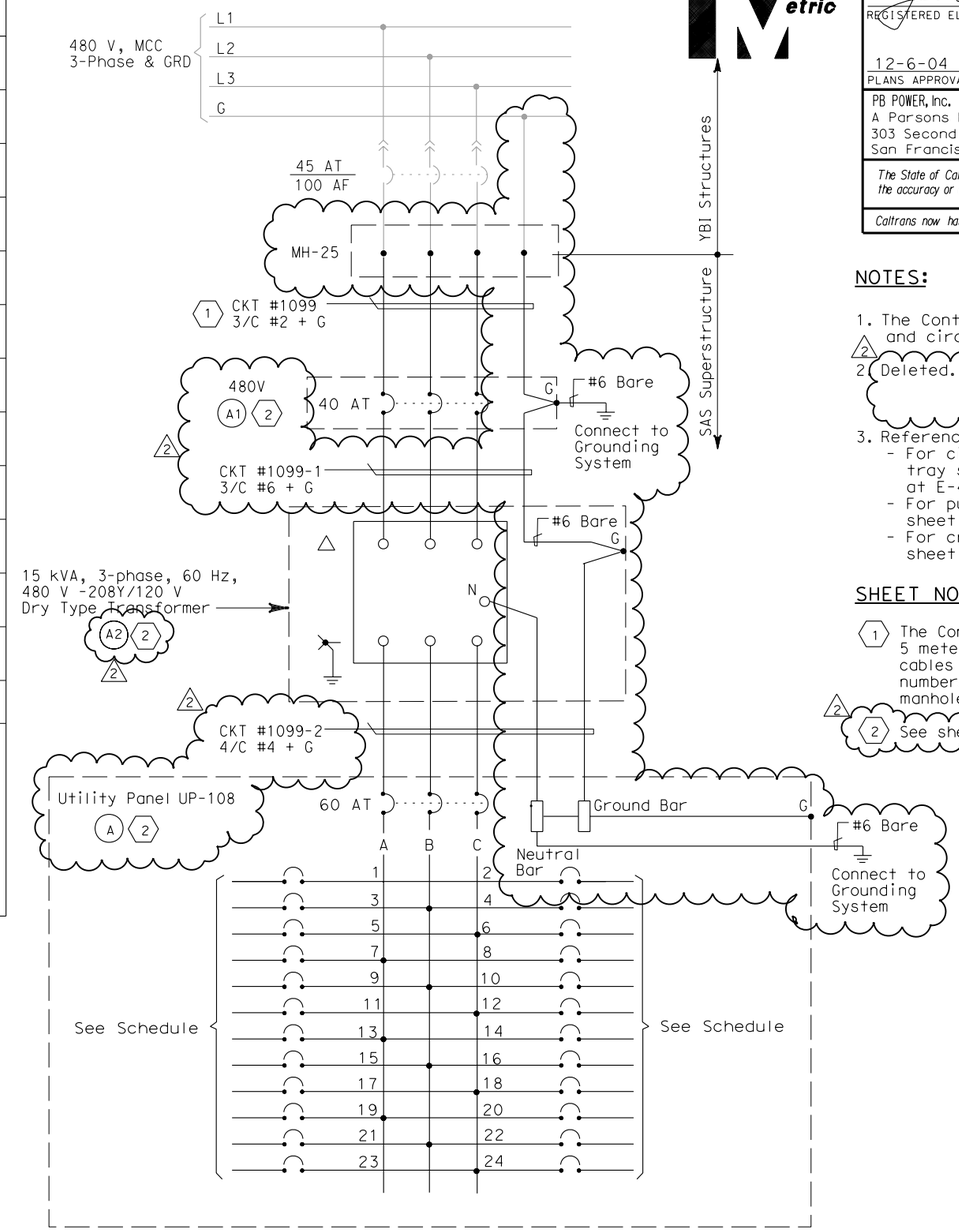

NOTES:

1. The Contractor shall provide nameplates and circuit schedules as shown.
2. Deleted.
3. References:
   - For circuit and conduit/cable tray schedules, see sheets starting at E-401.
   - For pull box schedule, see sheet E-83.
   - For crossbeam lighting plan, see sheet E-119.

SHEET NOTES:

1. The Contractor shall extend and coil 5 meters of cable in manhole 25. All cables shall be tagged with circuit numbers as shown. For location of manhole 25, see sheet E-11.
2. See sheet E-75 for Equipment Schedule.

REGISTERED PROFESSIONAL ENGINEER S. A. ESTOQUE, JR. No. E-10151 Exp. 12/31/2008 ELECTRICAL STATE OF CALIFORNIA
FOR REVISION ONLY 1

REGISTERED PROFESSIONAL ENGINEER FADI WALIEDDINE No. 11465 Exp. 12/31/2009 ELECTRICAL STATE OF CALIFORNIA
FOR REVISION ONLY 2

REQUEST FOR INFORMATION NOT ADDRESSED IN THIS CCO REMAIN IN FORCE

MARK	DATE	DESCRIPTIONS	BY	CH'D	CCO#
2	03/30/09	SERVICE PLATFORM ELECTRICAL CHANGES	RR MP	RG FW	55
1	03/04/08	BARRIER MODIFICATIONS	JS BM	RG SE	44

REVISIONS

CONTRACT CHANGE ORDER NO._____
SHEET _____ OF _____

THIS PLAN IS ACCURATE FOR ELECTRICAL WORK ONLY.

DETAILS
SAS SUPERSTRUCTURE ROADWAY WESTBOUND PANEL UP-108 SCHEDULE
NO SCALE

E-63

EJL	2/04	REVISED BY	DATE REVISED
JP	BL	DATE 08/01	11/01
CALCULATED/DESIGNED BY	CHECKED BY		

DESIGN OVERSIGHT
BEHZAD GOLEMOHAMMADI

STATE OF CALIFORNIA - DEPARTMENT OF TRANSPORTATION
Caltrans

LAST REVISION 00-00-00
DATE PLOTTED => 3/31/2009
TIME PLOTTED => 3:04:35 PM

FOR REDUCED PLANS ORIGINAL SCALE IS IN MILLIMETERS 0 20 40 60 80

DGN FILE =>T:\13103\MS\pse\SAS Struc\CCO\SAS CCO55\04-0120f1_0130R02.dgn
USERNAME =>garciar

CU 04251 EA 0120F1

DIST	COUNTY	ROUTE	KILOMETER POST TOTAL PROJECT	SHEET No	TOTAL SHEETS
04	SF	80	13.2/13.9	134 R1	1204

REGISTERED ELECTRICAL ENGINEER 12/19/02 DATE

12-6-04
PLANS APPROVAL DATE

REGISTERED PROFESSIONAL ENGINEER JENS ERLINGSSON No. 8249 Exp. 9/30/06 ELECTRICAL STATE OF CALIFORNIA

PB POWER, Inc.
A Parsons Brinckerhoff Company
303 Second St., Suite 700N
San Francisco, CA 94107-1317

The State of California or its officers or agents shall not be responsible for the accuracy or completeness of electronic copies of this plan sheet.

Caltrans now has a web site! To get to the web site, go to http://www.dot.ca.gov

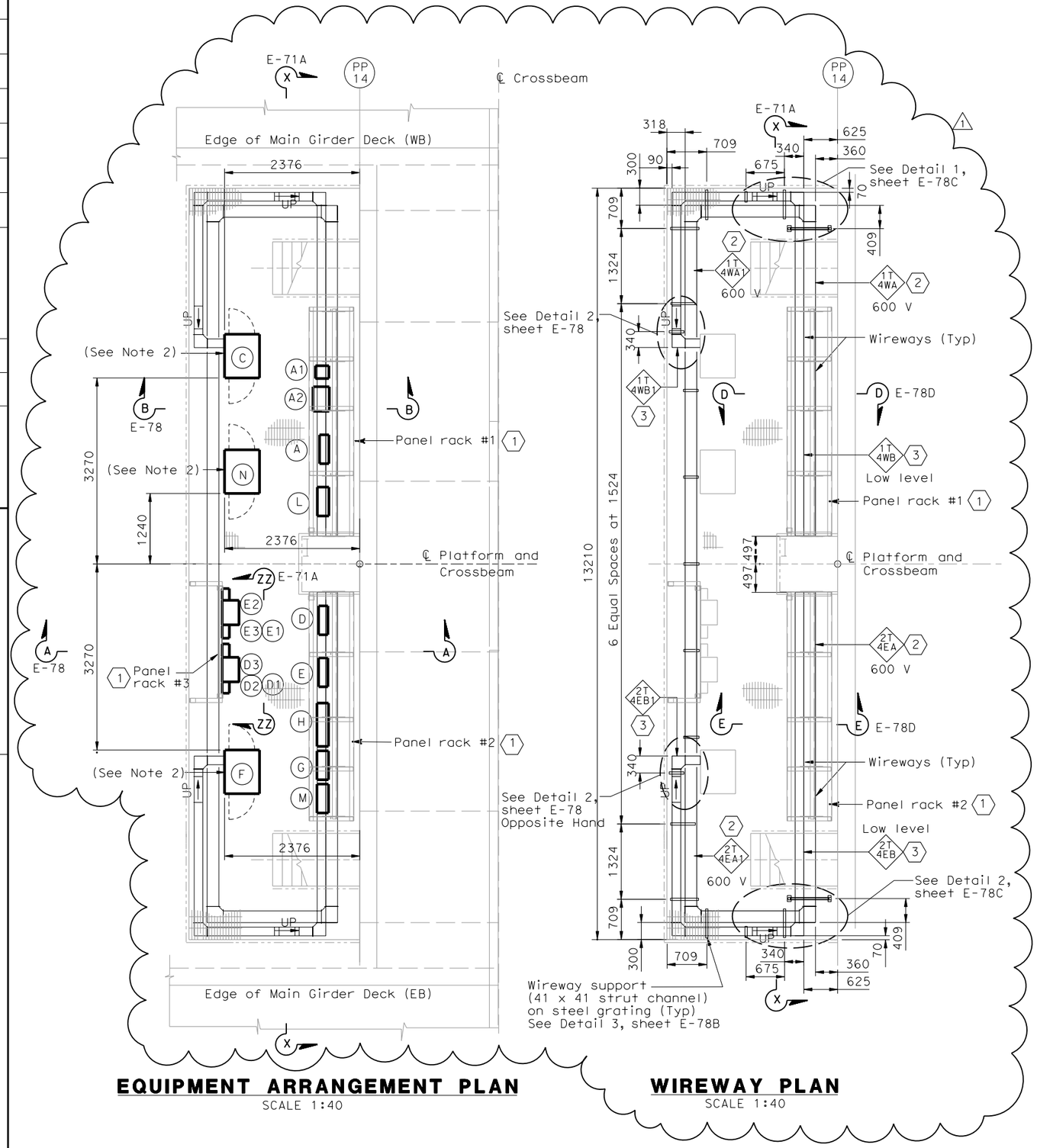

EQUIPMENT ARRANGEMENT PLAN
SCALE 1:40

WIREWAY PLAN
SCALE 1:40

EQUIPMENT SCHEDULE:

Equipment for Westbound

- (A) Utility Panel, UP-104, 100A 208/120 V, 3-phase, 4-wire
- (A1) 480 V Breaker for (A2) (Nema 4X) Size: 495 H X 232 W X 124 D
- (A2) 15 kVA Transformer, 3 phase, 60 hertz 480 V-208/120 V, 3 phase (Nema 4X) Size: 375 H X 485 W X 311 D
- (C) Controller Cabinet #TOS-4WA Size: 1625 H X 615 W X 768 D
- (L) TOS/COM-4WA Pull Box (PB-2B)
- (N) Controller Cabinet #TOS-4WB (Temporary) Size: 1625 H X 615 W X 768 D

Equipment for Eastbound

- (D) Utility Panel, UP-204, 100A MLO 208/120 V, 3-phase, 4-wire
- (D1) 480 V Breaker for (D2) (Nema 4X) Size: 495 H X 232 W X 124 D
- (D2) 15 kVA Transformer, 3 phase, 60 hertz 480 V-208/120 V, 3 phase (Nema 4X) Size: 375 H X 485 W X 311 D
- (D3) Enclosed circuit breaker 10 kAIC 240 V 3 phase in NEMA 4X enclosure.
- (E) Lighting Panel LP-219, 100A MLO 208/120 V, 3-phase, 4-wire
- (E1) 480 V Breaker for (E2) (Nema 4X) Size: 495 H X 232 W X 124 D
- (E2) 15 kVA Transformer, 3 phase, 60 hertz 480 V-208/120 V, 3 phase (Nema 4X) Size: 375 H X 485 W X 311 D
- (E3) Enclosed circuit breaker 10 kAIC 240 V 3 phase in NEMA 4X enclosure.
- (F) Controller Cabinet #TOS-4EA Size: 1625 H X 615 W X 768 D
- (M) TOS/COM-4EA Pull Box (PB-2B)

Equipment Common for Westbound/Eastbound

- (G) Telephone Terminal Box #TEL-4 (PB-7C)
- (H) Communication Terminal Box #COM-4 (PB-7B)

SHEET NOTES:

1. For electrical panel support details, see AS-sheets.
2. 600 V Stainless steel wireway, Nema 4X with cover.
3. Low level Stainless steel wireway, Nema 4X with cover.

NOTES:

1. The contractor shall verify the sizes and mounting dimensions of all rack mounted equipment prior to the fabrication of service platform racks. The contractor shall also verify the wireway mounting dimensions and support locations and make adjustment as needed to suit field condition.
2. Contractor to provide cover plate and sealant to all cabinets with open bottom. Cover plate shall be of the same material. See Sheet E-78B for details.
3. References:
   - For platform 4 conduit, lighting and grounding plan, see sheet E-114.
   - For location of platform 4, see sheet E-46.
   - TOS are shown for conduit routing only. For typical details of TOS controller and devices, see sheets E-344 through E-361.
   - For schedule of utility panel UP-104, see sheet E-59.
   - For schedule of utility panel UP-204, see sheet E-150.
   - For schedule of lighting panel LP-219, see sheet E-155.
   - For typical panel arrangement details of SCADA communications terminal box, see sheet E-321.
   - For pull box schedule, see sheet E-83.
   - For circuit and conduit/cable tray schedules, see sheets starting at E-401.
   - For platform elevations, see sheet E-71A.

REGISTERED PROFESSIONAL ENGINEER FADI WALIEDDINE No. 11465 Exp. 12/31/2009 ELECTRICAL STATE OF CALIFORNIA

FOR REVISION ONLY

REQUEST FOR INFORMATION NOT ADDRESSED IN THIS CCO REMAIN IN FORCE

MARK	DATE	DESCRIPTIONS	BY	CH'D	CCO#
1	03/30/09	SERVICE PLATFORM ELECTRICAL CHANGES	RR MP	RG FW	55

REVISIONS

CONTRACT CHANGE ORDER NO._____
SHEET_____ OF _____

DETAILS
SAS SUPERSTRUCTURE ROADWAY WESTBOUND PLATFORM 4 ARRANGEMENT
SCALE AS NOTED

E-71

STATE OF CALIFORNIA - DEPARTMENT OF TRANSPORTATION	DESIGN OVERSIGHT	CALCULATED/DESIGNED BY	FK
Caltrans	BEHZAD GOLEMOHAMMADI	CHECKED BY	IAH
		REVISED BY	DATE II/02
		DATE REVISED	II/02

THIS PLAN IS ACCURATE FOR ELECTRICAL WORK ONLY.

ALL DIMENSIONS ARE IN MILLIMETERS UNLESS OTHERWISE SHOWN.

FOR REDUCED PLANS ORIGINAL SCALE IS IN MILLIMETERS 0 20 40 60 80

DGN FILE =>T:\13103\MS\pse\SAS Struc\CCO\SAS CCO55\04-0120f1_0134R01.dgn
USERNAME =>garciar

CU 04251 EA 0120F1

LAST REVISION 00-00-00 DATE PLOTTED => 3/31/2009 TIME PLOTTED => 3:03:48 PM

DIST	COUNTY	ROUTE	KILOMETER POST TOTAL PROJECT	SHEET No	TOTAL SHEETS
04	SF	80	13.2/13.9	134 S1	1204

REGISTERED ELECTRICAL ENGINEER 6/12/08 DATE

PLANS APPROVAL DATE

REGISTERED PROFESSIONAL ENGINEER FADI WALIEDDINE No. 11465 Exp. 12/31/2009 ELECTRICAL STATE OF CALIFORNIA

PB AMERICAS, Inc.
A Parsons Brinckerhoff Company
303 Second St., Suite 700N
San Francisco, CA 94107-1317

The State of California or its officers or agents shall not be responsible for the accuracy or completeness of electronic copies of this plan sheet.

Caltrans now has a web site! To get to the web site, go to http://www.dot.ca.gov

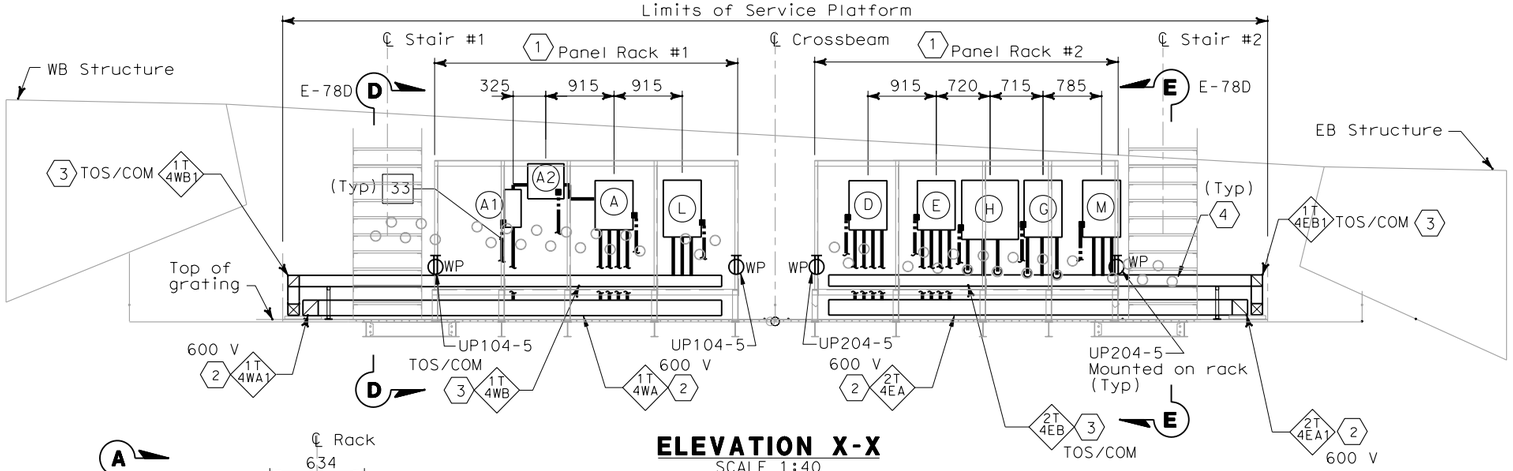

ELEVATION X-X
SCALE 1:40

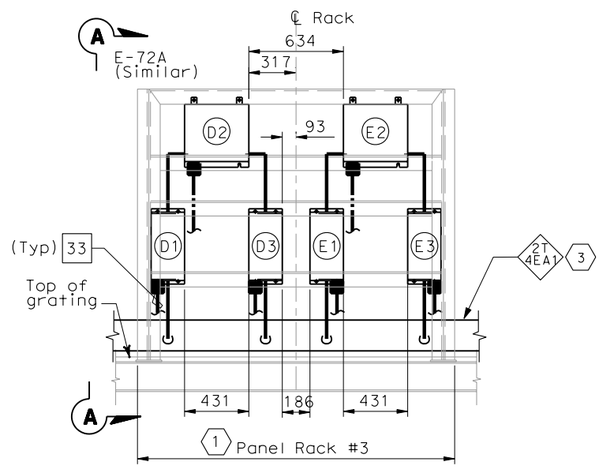

ELEVATION Z-Z
SCALE 1:20

REQUEST FOR INFORMATION NOT ADDRESSED IN THIS CCO REMAIN IN FORCE

MARK	DATE	DESCRIPTIONS	BY	CH'D	CCO#
0	03/30/09	SERVICE PLATFORM ELECTRICAL CHANGES	RR MP	RG FW	55

REVISIONS

CONTRACT CHANGE ORDER NO._____
SHEET_____ OF _____

SHEET NOTES:

1. For electrical panel support details, see AS-sheets, AS-13, AS-13A and AS-13B.
2. 600 V Stainless steel wireway, Nema 4X with cover.
3. Low level Stainless steel wireway, Nema 4X with cover.
4. Empty conduits shall be capped for future use.

NOTES:

1. Equipment dimensions mounted at panel racks shall be verified by Contractor prior to purchase and installation. Dimensions for equipment location are approximate and may be adjusted to suit field condition.
2. (SP) Denotes spare pipe sleeve for 78 mm conduit. Contractor to provide plug at each ends

WESTBOUND — CONDUIT NUMBERS

A	Utility Panel, UP-104	4/203D 4/204A 4/009 4/010
A1	Main Breaker for A2	4/203A 4/203B
A2	15 kVA Transformer	4/203B 4/203C
L	TOS/COM-4WA Pull Box	4/205A 4/206A 4/007A

EASTBOUND — CONDUIT NUMBERS

D	Utility Panel, UP-204	5/203D 5/204A 5/001 5/002
D1	Main Breaker for D2	5/203A 5/203B
D2	15 kVA Transformer	5/203B 5/203C
D3	Feeder Breaker for D	5/203C 5/203E
E	Lighting Panel LP-219	5/205D 5/004 5/005 5/006
E1	Main Breaker for E2	5/205A 5/205B
E2	15 kVA Transformer	5/205B 5/205C
E3	Feeder Breaker for E	5/205C 5/205E
G	Telephone Terminal Box #TEL-4	5/206 5/206A 5/207
H	Communication Terminal Box #COM-4	5/210 5/210A 5/232
M	TOS/COM-4EA Pull Box	5/207A 5/230A 5/231A

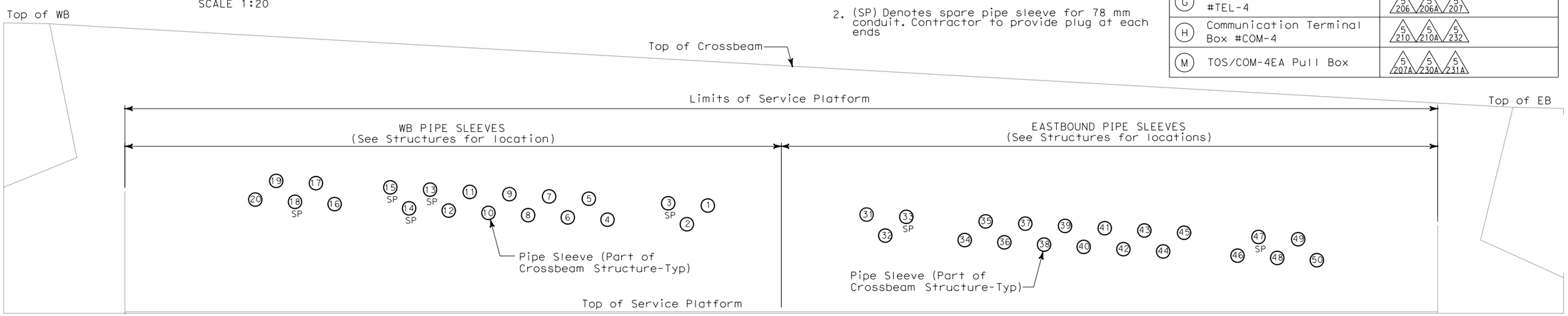

PIPE SLEEVE ELEVATION Y-Y (SEE SHEET E-114)
SCALE 1:20

DETAILS
SAS SUPERSTRUCTURE ROADWAY WESTBOUND PLATFORM 4 ARRANGEMENT
SCALE AS NOTED

E-71A

THIS PLAN IS ACCURATE FOR ELECTRICAL WORK ONLY.

ALL DIMENSIONS ARE IN MILLIMETERS UNLESS OTHERWISE SHOWN.

FOR REDUCED PLANS ORIGINAL SCALE IS IN MILLIMETERS 0 20 40 60 80

DGN FILE =>T:\13103\MS\pse\SAS Struc\CCO\SAS CCO55\04-0120f1_0134S01.dgn
USERNAME =>garciar

CU 04251 EA 0120F1

DESIGN OVERSIGHT BEHZAD GOLEMOHAMMADI

CALCULATED/DESIGNED BY | CHECKED BY | DATE | REVISED BY | DATE REVISED

STATE OF CALIFORNIA - DEPARTMENT OF TRANSPORTATION

LAST REVISION 00-00-00 | DATE PLOTTED => 3/31/2009 TIME PLOTTED => 3:03:05 PM

DIST	COUNTY	ROUTE	KILOMETER POST TOTAL PROJECT	SHEET No	TOTAL SHEETS
04	SF	80	13.2/13.9	135 R1	1204

Jens Erlingsson 6/12/08
REGISTERED ELECTRICAL ENGINEER DATE

12-6-04
PLANS APPROVAL DATE

REGISTERED PROFESSIONAL ENGINEER JENS ERLINGSSON No. 8249 Exp. 9/30/06 ELECTRICAL STATE OF CALIFORNIA

PB POWER, Inc.
A Parsons Brinckerhoff Company
303 Second St., Suite 700N
San Francisco, CA 94107-1317

The State of California or its officers or agents shall not be responsible for the accuracy or completeness of electronic copies of this plan sheet.

Caltrans now has a web site! To get to the web site, go to http://www.dot.ca.gov

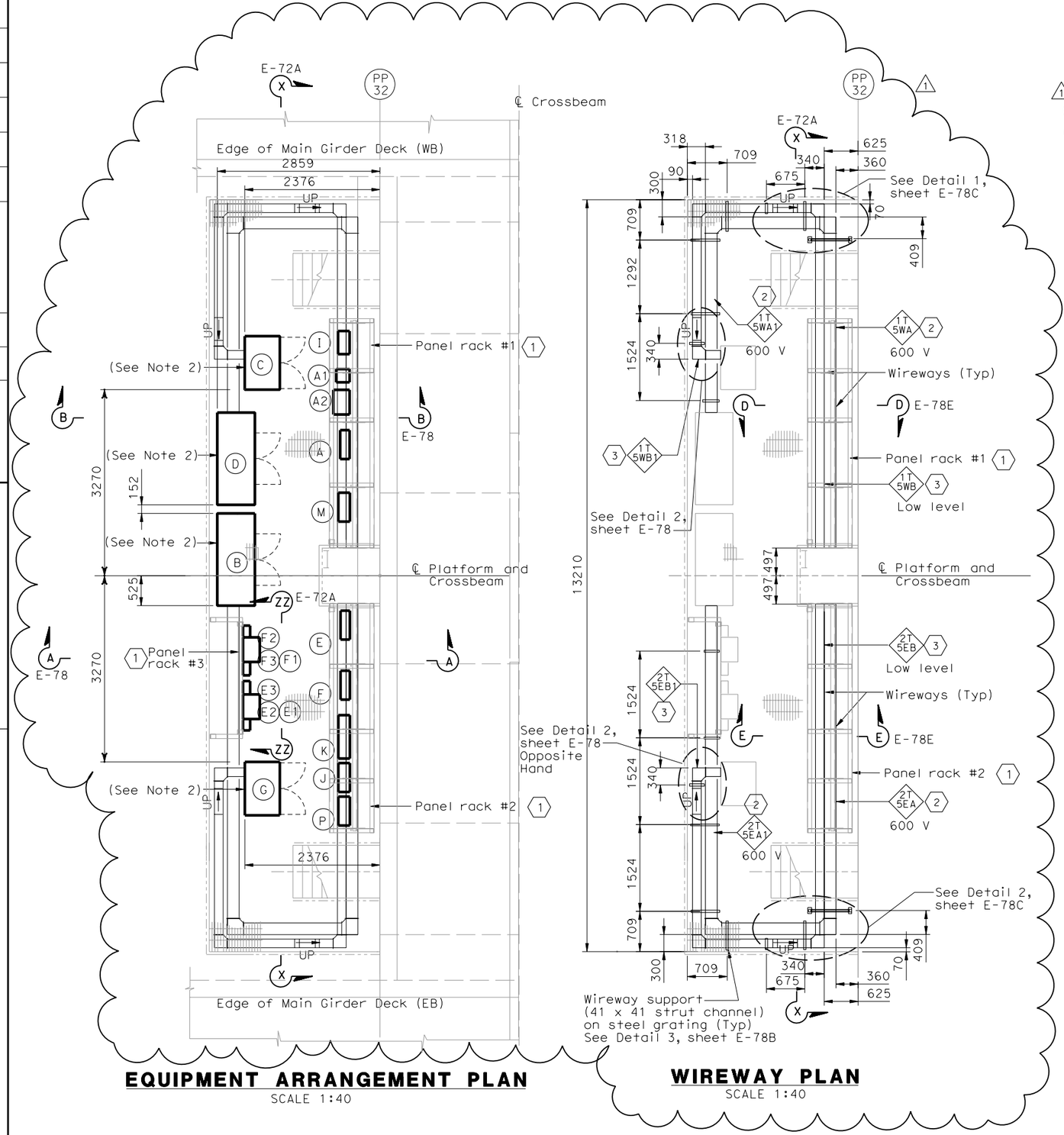

EQUIPMENT ARRANGEMENT PLAN
SCALE 1:40

WIREWAY PLAN
SCALE 1:40

EQUIPMENT SCHEDULE:

Equipment for Westbound

- (A) Utility Panel, UP-105, 100A 208/120 V, 3-phase, 4-wire
  - (A1) 480 V Breaker for (A2) (Nema 4X) Size: 495 H X 232 W X 124 D
  - (A2) 15 kVA Transformer, 3 phase, 60 hertz 480 V-208/120 V, 3 phase (Nema 4X) Size: 375 H X 485 W X 311 D
- (B) Strong Motion Recorder #2 (Box A) Size: 1900 H X 1620 W X 660 D
- (C) Remote Terminal Unit RTU #10W Size: 1830 H X 940 W X 610 D
- (D) Strong Motion Recorder #2 (Box B) Size: 1900 H X 1620 W X 660 D
- (M) TOS/COM-5WA Pull Box (PB-2B)

Equipment for Eastbound

- (E) Utility Panel, UP-205, 100A MLO 208/120 V, 3-phase, 4-wire
  - (E1) 480 V Breaker for (E2) (Nema 4X) Size: 495 H X 232 W X 124 D
  - (E2) 15 kVA Transformer, 3 phase, 60 hertz 480 V-208/120 V, 3 phase (Nema 4X) Size: 375 H X 485 W X 311 D
  - (E3) Enclosed circuit breaker 10 kAIC 240 V 3 phase in NEMA 4X enclosure.
- (F) Lighting Panel LP-220, 100A MLO 208/120 V, 3-phase, 4-wire
  - (F1) 480 V Breaker for (F2) (Nema 4X) Size: 495 H X 232 W X 124 D
  - (F2) 15 kVA Transformer, 3 phase, 60 hertz 480 V-208/120 V, 3 phase (Nema 4X) Size: 375 H X 485 W X 311 D
  - (F3) Enclosed circuit breaker 10 kAIC 240 V 3 phase in NEMA 4X enclosure.
- (G) Remote Terminal Unit RTU #10E Size: 1830 H X 940 W X 610 D
- (P) TOS/COM-5EA Pull Box (PB-2B)

Equipment Common for Westbound/Eastbound

- (I) Navigation Relay Cabinet NAP-5 (PB-6C)
- (J) Telephone Terminal Box #TEL-5 (PB-7C)
- (K) Communication Terminal Box COM-5 (PB-7B)

SHEET NOTES:

1. For electrical panel support details, see AS-sheets.
2. 600 V Stainless steel wireway, Nema 4X with cover.
3. Low level Stainless steel wireway, Nema 4X with cover.

NOTES:

1. The contractor shall verify the sizes and mounting dimensions of all rack mounted equipment prior to the fabrication of service platform racks. The contractor shall also verify the wireway mounting dimensions and support locations and make adjustment as needed to suit field condition.
2. Contractor to provide cover plate and sealant to all cabinets with open bottom. Cover plate shall be of the same material. See Sheet E-78B for details.
3. References:
   - For platform 5 conduit, lighting and grounding plan, see sheet E-115.
   - For location of platform 5, see sheet E-47.
   - TOS are shown for conduit routing only. For typical details of TOS controller and devices, see sheets E-344 through E-361.
   - For schedule of utility panel UP-105, see sheet E-60.
   - For schedule of utility panel UP-205, see sheet E-151.
   - For schedule of lighting panel LP-220, see sheet E-156.
   - For typical panel arrangement details of SCADA communications terminal box, see sheet E-321.
   - For pull box schedule, see sheet E-83.
   - For circuit and conduit/cable tray schedules, see sheets starting at E-401.
   - For platform elevations, see sheet E-72A.

REGISTERED PROFESSIONAL ENGINEER FADI WALIEDDINE No. 11465 Exp. 12/31/2009 ELECTRICAL STATE OF CALIFORNIA

FOR REVISION ONLY

REQUEST FOR INFORMATION NOT ADDRESSED IN THIS CCO REMAIN IN FORCE					
1	03/30/09	SERVICE PLATFORM ELECTRICAL CHANGES	RR MP	RG FW	55
MARK	DATE	DESCRIPTIONS	BY	CH'D	CCO#
REVISIONS					

CONTRACT CHANGE ORDER NO._____
SHEET_____ OF_____

DETAILS
SAS SUPERSTRUCTURE ROADWAY WESTBOUND PLATFORM 5 ARRANGEMENT
SCALE AS NOTED

E-72

DATE	FK	CALCULATED/ DESIGNED BY
11/02	IAH	CHECKED BY

REVISED BY | DATE REVISED

DESIGN OVERSIGHT
BEHZAD GOLEMOHAMMADI

STATE OF CALIFORNIA - DEPARTMENT OF TRANSPORTATION
Caltrans

THIS PLAN IS ACCURATE FOR ELECTRICAL WORK ONLY.

ALL DIMENSIONS ARE IN MILLIMETERS UNLESS OTHERWISE SHOWN.

FOR REDUCED PLANS ORIGINAL SCALE IS IN MILLIMETERS 0 20 40 60 80

DGN FILE =>T:\13103\MS\pse\SAS Struc\CCO\SAS CC055\04-0120f1_0135R01.dgn
USERNAME =>garciar

CU 04251 | EA 0120F1

LAST REVISION 00-00-00 | DATE PLOTTED => 3/31/2009 TIME PLOTTED => 3:02:27 PM

DIST	COUNTY	ROUTE	KILOMETER POST TOTAL PROJECT	SHEET No	TOTAL SHEETS
04	SF	80	13.2/13.9	135 S1	1204

REGISTERED ELECTRICAL ENGINEER 6/12/08 DATE

PLANS APPROVAL DATE

REGISTERED PROFESSIONAL ENGINEER FADI WALIEDDINE No. 11465 Exp. 12/31/2009 ELECTRICAL STATE OF CALIFORNIA

PB AMERICAS, Inc.
A Parsons Brinckerhoff Company
303 Second St., Suite 700N
San Francisco, CA 94107-1317

The State of California or its officers or agents shall not be responsible for the accuracy or completeness of electronic copies of this plan sheet.

Caltrans now has a web site! To get to the web site, go to http://www.dot.ca.gov

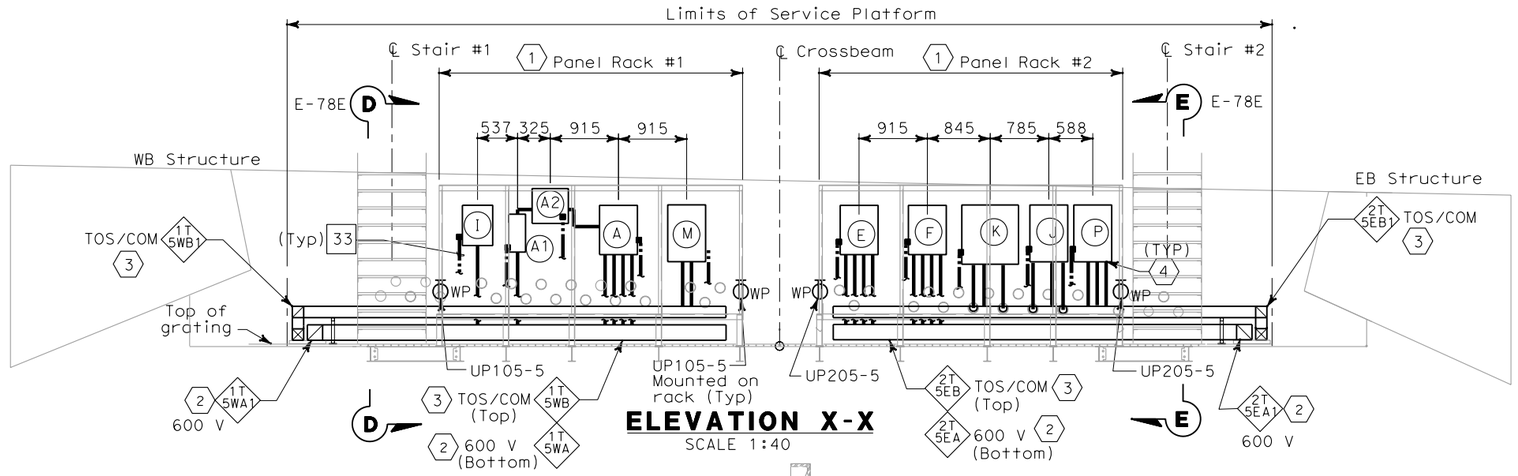

ELEVATION X-X
SCALE 1:40

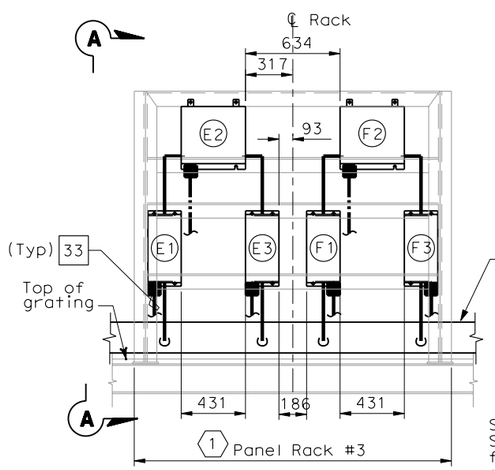

ELEVATION Z-Z
SCALE 1:20

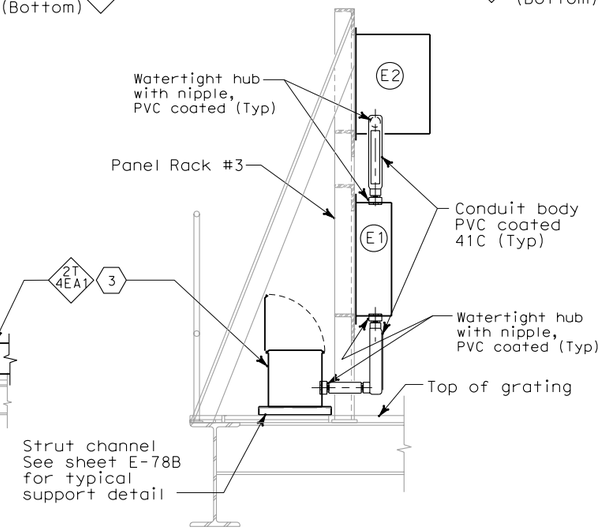

SECTION A-A
NO SCALE
PLATFORM NO. 5 AS SHOWN
(TYPICAL FOR PLATFORMS NOs. 4, 6, 7 AND 8)

SHEET NOTES:

1. For electrical panel support details, see AS-sheets, AS-13, AS-13A and AS-13B.
2. 600 V Stainless Steel Wireway, Nema 4X with cover.
3. Low level Stainless Steel Wireway, Nema 4X with cover.
4. Empty conduits shall be capped for future use.

NOTES:

1. Equipment dimensions mounted at panel racks shall be verified by Contractor prior to purchase and installation. Dimensions for equipment location are approximate and may be adjusted to suit field condition.
2. (SP) Denotes spare pipe sleeve for 78 mm conduit. Contractor to provide plug at each ends

WESTBOUND	CONDUIT NUMBERS
A Utility Panel, UP-105	4 223D, 4 224A, 4 033, 4 034
A1 Main Breaker for A2	4 223A, 4 223B
A2 15 kVA Transformer	4 223B, 4 223C
M TOS/COM-5WA Pull Box	4 225A, 4 226A
I Navigation Relay Cabinet NAP-5	4 029

EASTBOUND	CONDUIT NUMBERS
E Utility Panel, UP-205	5 223D, 5 224A, 5 026, 5 027
E1 Main Breaker for E2	5 223A, 5 223B
E2 15 kVA Transformer	5 223B, 5 223C
E3 Feeder Circuit Breaker for E	5 223C, 5 223E
F Lighting Panel LP-220	5 225D, 5 029, 5 030, 5 031
F1 Main Breaker for F2	5 225A, 5 225B
F2 15 kVA Transformer	5 225B, 5 225C
F3 Feeder Circuit Breaker for F	5 225C, 5 225E
J Telephone Terminal Box #TEL-5	5 233, 5 235A, 5 234
K Communication Terminal Box #COM-5	5 228, 5 234A, 5 235
P TOS/COM-5EA Pull Box	5 226A, 5 227A, 5 233A

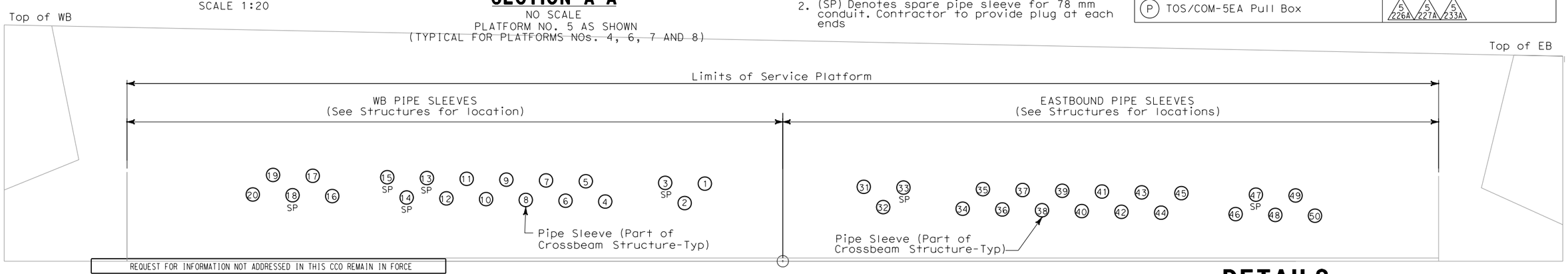

PIPE SLEEVE ELEVATION Y-Y (SEE SHEET E-115)
SCALE 1:20

REQUEST FOR INFORMATION NOT ADDRESSED IN THIS CCO REMAIN IN FORCE

MARK	DATE	DESCRIPTIONS	BY	CH'D	CCO#
0	03/30/09	SERVICE PLATFORM ELECTRICAL CHANGES	RR MP	RG FW	55

REVISIONS

CONTRACT CHANGE ORDER NO._____
SHEET_____ OF _____

THIS PLAN IS ACCURATE FOR ELECTRICAL WORK ONLY.

DETAILS
SAS SUPERSTRUCTURE ROADWAY WESTBOUND PLATFORM 5 ARRANGEMENT
SCALE AS NOTED

ALL DIMENSIONS ARE IN MILLIMETERS UNLESS OTHERWISE SHOWN.

E-72A

DESIGN OVERSIGHT: BEHZAD GOLEMOHAMMADI

CALCULATED/DESIGNED BY | CHECKED BY | DATE | REVISED BY | DATE REVISED

STATE OF CALIFORNIA - DEPARTMENT OF TRANSPORTATION

Caltrans

FOR REDUCED PLANS ORIGINAL SCALE IS IN MILLIMETERS 0 20 40 60 80

DGN FILE =>T:\13103\MS\pse\SAS Struc\CCO\SAS CC055\04-0120f1_0135S01.dgn
USERNAME =>garciar

CU 04251 | EA 0120F1

LAST REVISION 00-00-00 | DATE PLOTTED => 3/31/2009 TIME PLOTTED => 2:59:59 PM

DIST	COUNTY	ROUTE	KILOMETER POST TOTAL PROJECT	SHEET No	TOTAL SHEETS
04	SF	80	13.2/13.9	136 R1	1204

REGISTERED ELECTRICAL ENGINEER 12/19/02 DATE

12-6-04
PLANS APPROVAL DATE

REGISTERED PROFESSIONAL ENGINEER JENS ERLINGSSON No. 8249 Exp. 9/30/06 ELECTRICAL STATE OF CALIFORNIA

PB POWER, Inc.
A Parsons Brinckerhoff Company
303 Second St., Suite 700N
San Francisco, CA 94107-1317

The State of California or its officers or agents shall not be responsible for the accuracy or completeness of electronic copies of this plan sheet.

Caltrans now has a web site! To get to the web site, go to http://www.dot.ca.gov

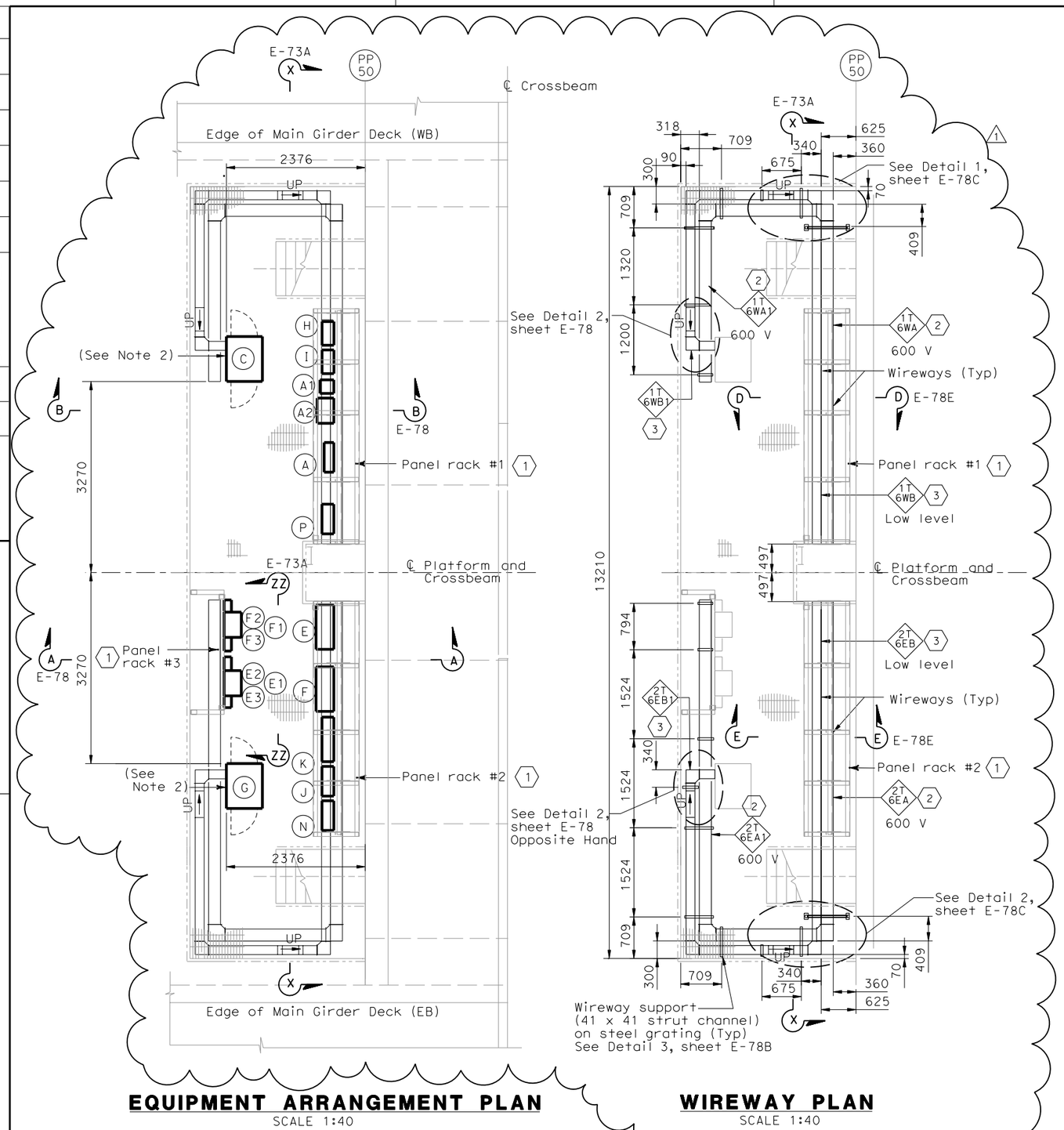

EQUIPMENT ARRANGEMENT PLAN
SCALE 1:40

WIREWAY PLAN
SCALE 1:40

EQUIPMENT SCHEDULE:

Equipment for Westbound

- (A) Utility Panel, UP-106, 100A 208/120 V, 3-phase, 4-wire
- (A1) 480 V Breaker for (A2) (Nema 4X) Size: 495 H X 232 W X 124 D
- (A2) 15 kVA Transformer, 3 phase, 60 hertz 480 V-208/120 V, 3 phase (Nema 4X) Size: 375 H X 485 W X 311 D
- (C) Controller Cabinet TOS-6WA Size: 1625 H X 615 W X 768 D
- (I) Navigation Relay Cabinet NAP-6W (PB-6C)
- (P) TOS/COM-6WA Pull Box (PB-2B)

Equipment for Eastbound

- (E) Utility Panel, UP-206, 100A MLO 208/120 V, 3-phase, 4-wire
- (E1) 480 V Breaker for (E2) (Nema 4X) Size: 495 H X 232 W X 124 D
- (E2) 15 kVA Transformer, 3 phase, 60 hertz 480 V-208/120 V, 3 phase (Nema 4X) Size: 375 H X 485 W X 311 D.
- (E3) Enclosed circuit breaker 10 kAIC 240 V 3 phase in NEMA 4X enclosure.
- (F) Lighting Panel LP-221, 100A MLO 208/120 V, 3-phase, 4-wire
- (F1) 480 V Breaker for LP-221 (Nema 4X) Size: 495 H X 232 W X 124 D
- (F2) 15 kVA Transformer, 3 phase, 60 hertz 480 V-208/120 V, 3 phase (Nema 4X) Size: 375 H X 485 W X 311 D
- (F3) Enclosed circuit breaker 10 kAIC 240 V 3 phase in NEMA 4X enclosure.
- (G) Controller Cabinet TOS-6EA Size: 1625 H X 615 W X 768 D
- (H) Navigation Relay Cabinet NAP-6E (PB-6C)
- (N) TOS/COM-6EA Pull Box (PB-2B)

Equipment Common for Westbound/Eastbound

- (J) Telephone Terminal Box #TEL-6 (PB-7C)
- (K) Communication Terminal Box COM-6 (PB-7B)

SHEET NOTES:

1. For electrical panel support details, see AS-sheets.
2. 600 V Stainless steel wireway, Nema 4X with cover.
3. Low level Stainless steel wireway, Nema 4X with cover.

NOTES:

1. The contractor shall verify the sizes and mounting dimensions of all rack mounted equipment prior to the fabrication of service platform racks. The contractor shall also verify the wireway mounting dimensions and support locations and make adjustment as needed to suit field condition.
2. Contractor to provide cover plate and sealant to all cabinets with open bottom. Cover plate shall be of the same material. See Sheet E-78B for details.
3. References:
   - For platform 6 conduit, lighting and grounding plan, see sheet E-116.
   - For location of platform 6, see sheet E-48.
   - TOS are shown for conduit routing only. For typical details of TOS controller and devices, see sheets E-344 through E-361.
   - For schedule of utility panel UP-106, see sheet E-61.
   - For schedule of utility panel UP-206, see sheet E-152.
   - For schedule of lighting panel LP-221, see sheet E-156.
   - For typical panel arrangement details of SCADA communications terminal box, see sheet E-321.
   - For pull box schedule, see sheet E-83.
   - For circuit and conduit/cable tray schedules, see sheets starting at E-401.
   - For platform elevations, see sheet E-73A.

REGISTERED PROFESSIONAL ENGINEER FADI WALIEDDINE No. 11465 Exp. 12/31/2009 ELECTRICAL STATE OF CALIFORNIA

FOR REVISION ONLY

REQUEST FOR INFORMATION NOT ADDRESSED IN THIS CCO REMAIN IN FORCE

MARK	DATE	DESCRIPTIONS	BY	CH'D	CCO#
1	03/30/09	SERVICE PLATFORM ELECTRICAL CHANGES	RR MP	RG FW	55

REVISIONS

CONTRACT CHANGE ORDER NO._____
SHEET_____ OF _____

DETAILS
SAS SUPERSTRUCTURE ROADWAY WESTBOUND PLATFORM 6 ARRANGEMENT
SCALE AS NOTED

E-73

THIS PLAN IS ACCURATE FOR ELECTRICAL WORK ONLY.

ALL DIMENSIONS ARE IN MILLIMETERS UNLESS OTHERWISE SHOWN.

FOR REDUCED PLANS ORIGINAL SCALE IS IN MILLIMETERS 0 20 40 60 80

DGN FILE =>T:\13103\MS\pse\SAS Struc\CCO\SAS CCO55\04-0120f1_0136R01.dgn
USERNAME =>garciar

CU 04251 EA 0120F1

LAST REVISION 00-00-00 DATE PLOTTED => 3/31/2009 TIME PLOTTED => 2:59:20 PM

STATE OF CALIFORNIA - DEPARTMENT OF TRANSPORTATION
Caltrans

DESIGN OVERSIGHT BEHZAD GOLEMOHAMMADI

CALCULATED/DESIGNED BY FK DATE 11/02 REVISED BY
CHECKED BY IAH 11/02 DATE REVISED

DIST	COUNTY	ROUTE	KILOMETER POST TOTAL PROJECT	SHEET No	TOTAL SHEETS
04	SF	80	13.2/13.9	136 ST	1204

REGISTERED ELECTRICAL ENGINEER — DATE 6/12/08

PLANS APPROVAL DATE

REGISTERED PROFESSIONAL ENGINEER — FADI WALIEDDINE No. 11465 Exp. 12/31/2009 ELECTRICAL — STATE OF CALIFORNIA

PB AMERICAS, Inc.
A Parsons Brinckerhoff Company
303 Second St., Suite 700N
San Francisco, CA 94107-1317

The State of California or its officers or agents shall not be responsible for the accuracy or completeness of electronic copies of this plan sheet.

Caltrans now has a web site! To get to the web site, go to http://www.dot.ca.gov

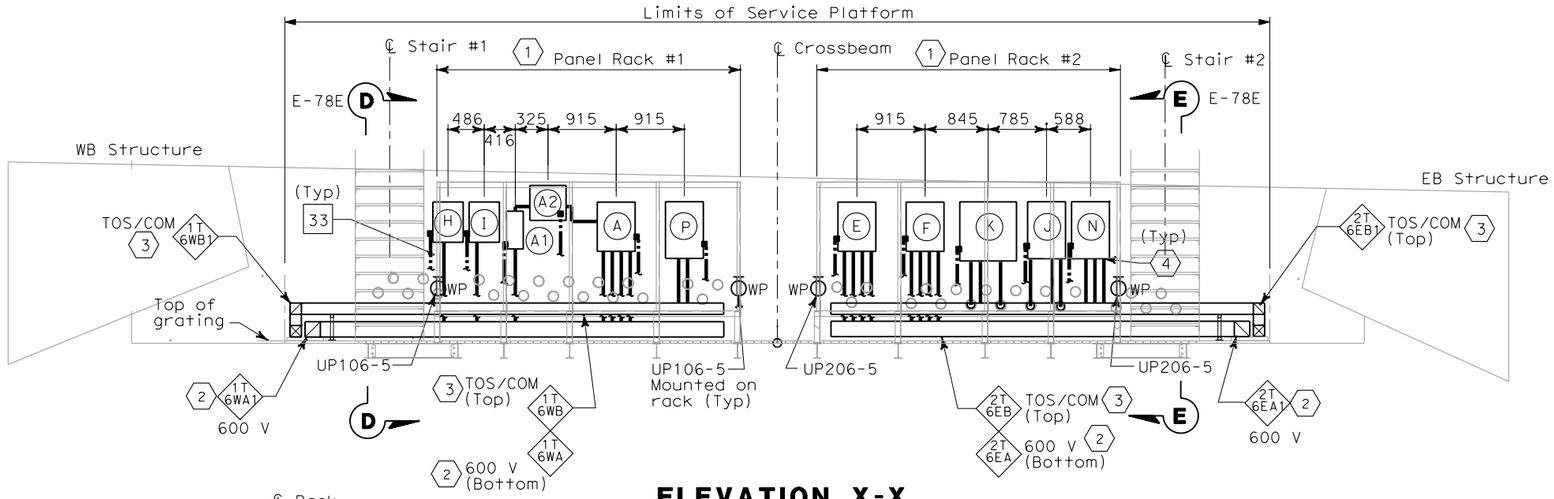

ELEVATION X-X

SCALE 1:40

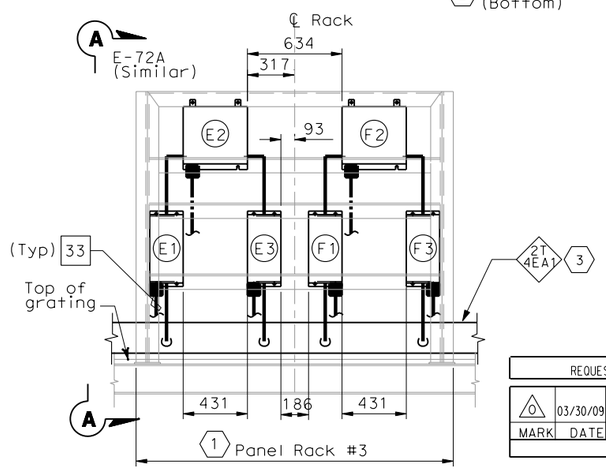

ELEVATION Z-Z

SCALE 1:20

REQUEST FOR INFORMATION NOT ADDRESSED IN THIS CCO REMAIN IN FORCE					
0	03/30/09	SERVICE PLATFORM ELECTRICAL CHANGES	RR MP	RG FW	55
MARK	DATE	DESCRIPTIONS	BY	CH'D	CCO#
REVISIONS					

CONTRACT CHANGE ORDER NO._____

SHEET_____ OF _____

SHEET NOTES:

1. For electrical panel support details, see AS-sheets, AS-13, AS-13A and AS-13B.
2. 600 V Stainless Steel Wireway, Nema 4X with cover.
3. Low level Stainless Steel Wireway, Nema 4X with cover.
4. Empty conduits shall be capped for future use.

NOTES:

1. Equipment dimensions mounted at panel racks shall be verified by Contractor prior to purchase and installation. Dimensions for equipment location are approximate and may be adjusted to suit field condition.
2. (SP) Denotes spare pipe sleeve for 78 mm conduit. Contractor to provide plug at each ends

WESTBOUND	CONDUIT NUMBERS
A Utility Panel, UP-106	4 2430, 4 244A, 4 036, 4 037
A1 Main Breaker for A2	4 243A, 4 243B
A2 15 kVA Transformer	4 243B, 4 243C
P TOS/COM-6WA Pull Box	4 245A, 4 246A
I Navigation Relay Cabinet NAP-6W	4 040

EASTBOUND	CONDUIT NUMBERS
E Utility Panel, UP-206	5 2430, 5 244A, 5 051, 5 053
E1 Main Breaker for E2	5 243A, 5 243B
E2 15 kVA Transformer	5 243B, 5 243C
E3 Feeder Breaker for E	5 243C, 5 243E
F Lighting Panel LP-221	5 241D, 5 054, 5 055, 5 056
F1 Main Breaker for F2	5 241A, 5 241B
F2 15 kVA Transformer	5 241B, 5 241C
F3 Feeder Breaker for F	5 241C, 5 241E
J Telephone Terminal Box #TEL-6	5 246, 5 238A, 5 247
K Communication Terminal Box #COM-6	5 250, 5 246A, 5 238
N TOS/COM-6EA Pull Box	5 247A, 5 236A, 5 237A
H Navigation Relay Cabinet NAP-6E	5 245A

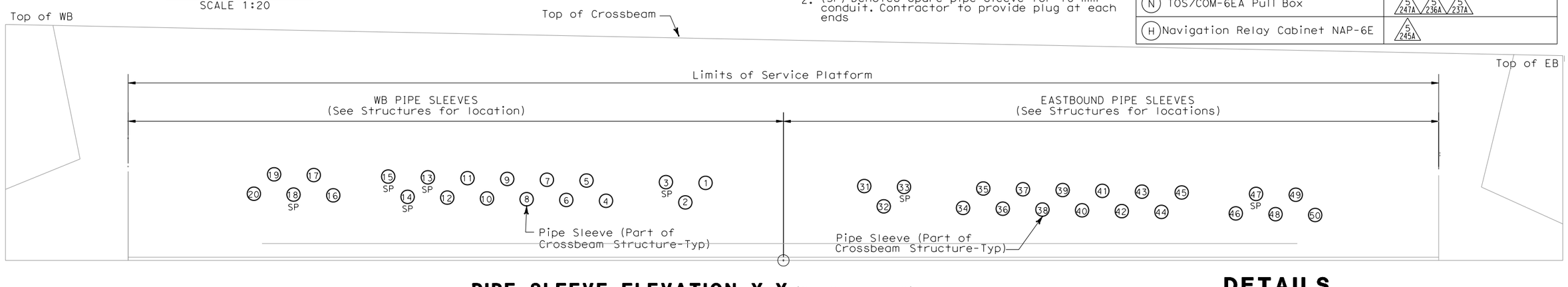

PIPE SLEEVE ELEVATION Y-Y (SEE SHEET E-116)

SCALE 1:20

DETAILS
SAS SUPERSTRUCTURE ROADWAY WESTBOUND PLATFORM 6 ARRANGEMENT

SCALE AS NOTED

E-73A

THIS PLAN IS ACCURATE FOR ELECTRICAL WORK ONLY.

ALL DIMENSIONS ARE IN MILLIMETERS UNLESS OTHERWISE SHOWN.

FOR REDUCED PLANS ORIGINAL SCALE IS IN MILLIMETERS 0 20 40 60 80

DGN FILE =>T:\13103\MS\pse\SAS Struc\CCO\SAS CCO55\04-0120f1_0136S01.dgn
USERNAME =>garciar

CU 04251 EA 0120F1

DESIGN OVERSIGHT — BEHZAD GOLEMOHAMMADI

CALCULATED/DESIGNED BY — CHECKED BY

DATE — REVISED BY — DATE REVISED

STATE OF CALIFORNIA - DEPARTMENT OF TRANSPORTATION — Caltrans

LAST REVISION 00-00-00 — DATE PLOTTED => 3/31/2009 TIME PLOTTED => 2:58:52 PM

DIST	COUNTY	ROUTE	KILOMETER POST TOTAL PROJECT	SHEET No	TOTAL SHEETS
04	SF	80	13.2/13.9	137 R1	1204

REGISTERED ELECTRICAL ENGINEER 12/19/02 DATE

12-6-04
PLANS APPROVAL DATE

REGISTERED PROFESSIONAL ENGINEER JENS ERLINGSSON No. 8249 Exp. 9/30/06 ELECTRICAL STATE OF CALIFORNIA

PB POWER, Inc.
A Parsons Brinckerhoff Company
303 Second St., Suite 700N
San Francisco, CA 94107-1317

The State of California or its officers or agents shall not be responsible for the accuracy or completeness of electronic copies of this plan sheet.

Caltrans now has a web site! To get to the web site, go to http://www.dot.ca.gov

Caltrans Metric

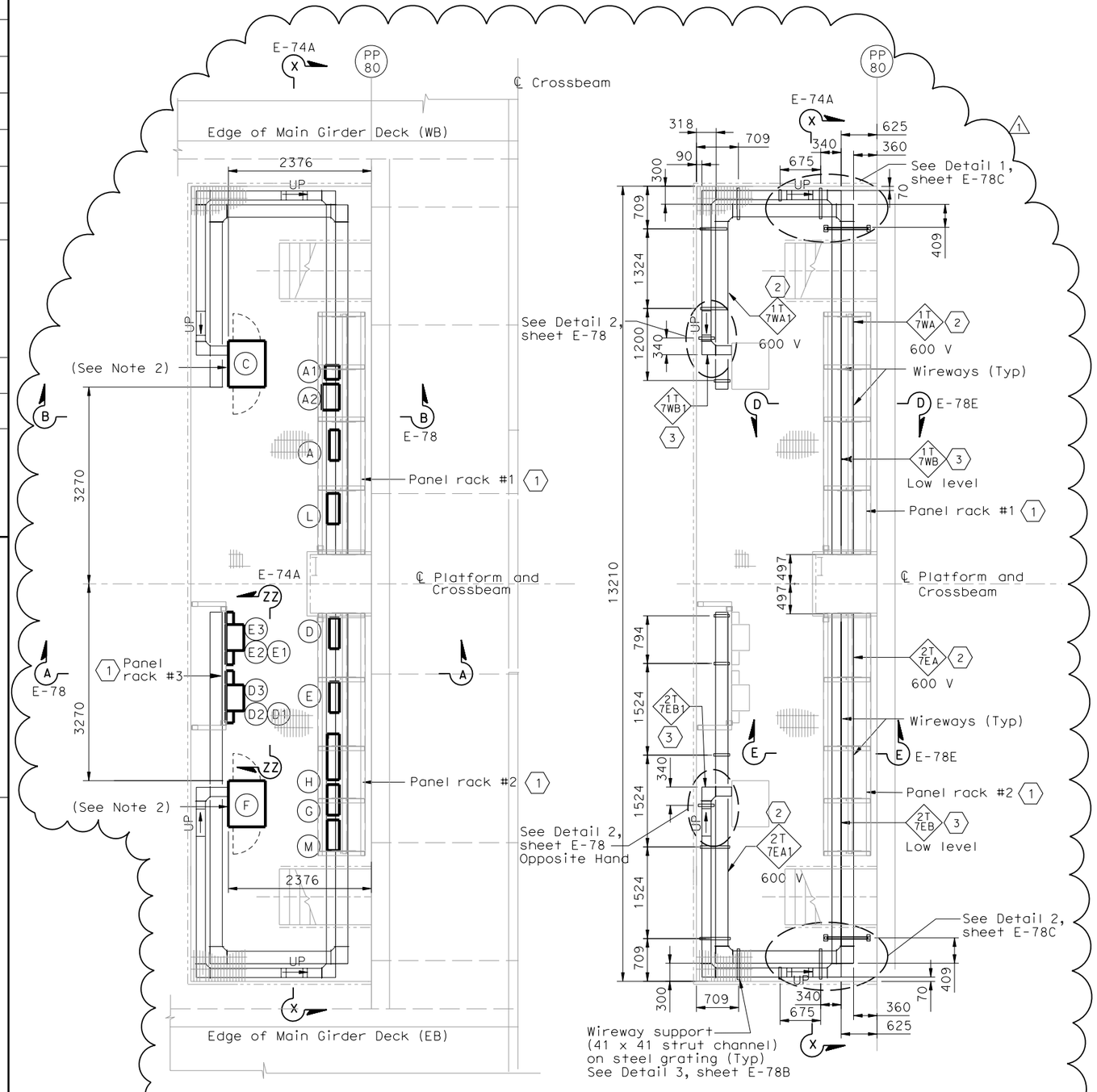

EQUIPMENT ARRANGEMENT PLAN
SCALE 1:40

WIREWAY PLAN
SCALE 1:40

EQUIPMENT SCHEDULE:

Equipment for Westbound

(A) Utility Panel, UP-107, 100A 208/120 V, 3-phase, 4-wire

(A1) Main Breaker for UP-107 (Nema 4X) Size: 495 H X 232 W X 124 D

(A2) 15 kVA Transformer, 3 phase, 60 hertz 480 V-208/120 V, 3 phase (Nema 4x) Size: 375 H X 485 W X 311 D

(C) Controller Cabinet #TOS-7WA Size: 1625 H X 615 W X 768 D

(L) TOS/COM-7WA Pull Box (PB-2B)

Equipment for Eastbound

(D) Utility Panel, UP-207, 100A, MLO 208/120 V, 3-phase, 4-wire

(D1) Main Breaker for (D2) (Nema 4X) Size: 495 H X 232 W X 124 D

(D2) 15 kVA Transformer, 3 phase, 60 hertz 480 V-208/120 V, 3 phase (Nema 4X) Size: 375 H X 485 W X 311 D

(D3) Enclosed circuit breaker 10 kAIC 240 V 3 phase in NEMA 4X enclosure.

(E) Lighting Panel LP-222, 100A MLO 208/120 V, 3-phase, 4-wire

(E1) Main Breaker for (E2) (Nema 4X) Size: 495 H X 232 W X 124 D

(E2) 15 kVA Transformer, 3 phase, 60 hertz 480 V-208/120 V, 3 phase (Nema 4X) Size: 375 H X 485 W X 311 D

(E3) Enclosed circuit breaker 10 kAIC 240 V 3 phase in NEMA 4X enclosure.

(F) Controller Cabinet #TOS-7EA, Size: 1625 H X 615 W X 768 D

(M) TOS/COM-7EA Pull Box (PB-2B)

Equipment Common for Westbound/Eastbound

(G) Telephone Terminal Box #TEL-7 (PB-7C)

(H) Communication Terminal Box #COM-7 (PB-7B)

SHEET NOTES:

(1) For electrical panel support details, see AS-sheets.

(2) 600 V Stainless steel wireway, Nema 4X with cover.

(3) Low level Stainless steel wireway, Nema 4X with cover.

NOTES:

1. The contractor shall verify the sizes and mounting dimensions of all rack mounted equipment prior to the fabrication of service platform racks. The contractor shall also verify the wireway mounting dimensions and support locations and make adjustment as needed to suit field condition.
2. Contractor to provide cover plate and sealant to all cabinets with open bottom. Cover plate shall be of the same material. See Sheet E-78B for details.
3. References:
   - For platform 7 conduit, lighting and grounding plan, see sheet E-117.
   - For location of platform 7, see sheet E-49.
   - TOS are shown for conduit routing only. For typical details of TOS controller and devices, see sheets E-344 through E-361.
   - For schedule of utility panel UP-107, see sheet E-62.
   - For schedule of utility panel UP-207, see sheet E-153.
   - For schedule of lighting panel LP-222, see sheet E-157.
   - For typical panel arrangement details of SCADA communications terminal box, see sheet E-321.
   - For pull box schedule, see sheet E-83.
   - For circuit and conduit/cable tray schedules, see sheets starting at E-401.
   - For platform elevations, see sheet E-74A.

REGISTERED PROFESSIONAL ENGINEER FADI WALIEDDINE No. 11465 Exp. 12/31/2009 ELECTRICAL STATE OF CALIFORNIA

FOR REVISION ONLY

REQUEST FOR INFORMATION NOT ADDRESSED IN THIS CCO REMAIN IN FORCE

MARK	DATE	DESCRIPTIONS	BY	CH'D	CCO#
1	03/30/09	SERVICE PLATFORM ELECTRICAL CHANGES	RR MP	RG FW	55

REVISIONS

CONTRACT CHANGE ORDER NO._____
SHEET_____ OF _____

DETAILS
SAS SUPERSTRUCTURE ROADWAY WESTBOUND PLATFORM 7 ARRANGEMENT
SCALE AS NOTED

E-74

THIS PLAN IS ACCURATE FOR ELECTRICAL WORK ONLY. ALL DIMENSIONS ARE IN MILLIMETERS UNLESS OTHERWISE SHOWN.

FOR REDUCED PLANS ORIGINAL SCALE IS IN MILLIMETERS 0 20 40 60 80

DGN FILE =>T:\13103\MS\pse\SAS Struc\CCO\SAS CC055\04-0120f1_0137R01.dgn
USERNAME =>garciar

CU 04251 EA 0120F1

LAST REVISION 00-00-00 DATE PLOTTED => 3/31/2009 TIME PLOTTED => 2:58:18 PM

STATE OF CALIFORNIA - DEPARTMENT OF TRANSPORTATION
Caltrans

DESIGN OVERSIGHT BEHZAD GOLEMOHAMMADI

CALCULATED/DESIGNED BY FK DATE 11/02 REVISED BY
CHECKED BY IAH 11/02 DATE REVISED

DIST	COUNTY	ROUTE	KILOMETER POST TOTAL PROJECT	SHEET No	TOTAL SHEETS
04	SF	80	13.2/13.9	137 S1	1204

REGISTERED ELECTRICAL ENGINEER 6/12/08 DATE

PLANS APPROVAL DATE

REGISTERED PROFESSIONAL ENGINEER FADI WALIEDDINE No. 11465 Exp. 12/31/2009 ELECTRICAL STATE OF CALIFORNIA

PB AMERICAS, Inc.
A Parsons Brinckerhoff Company
303 Second St., Suite 700N
San Francisco, CA 94107-1317

The State of California or its officers or agents shall not be responsible for the accuracy or completeness of electronic copies of this plan sheet.

Caltrans now has a web site! To get to the web site, go to http://www.dot.ca.gov

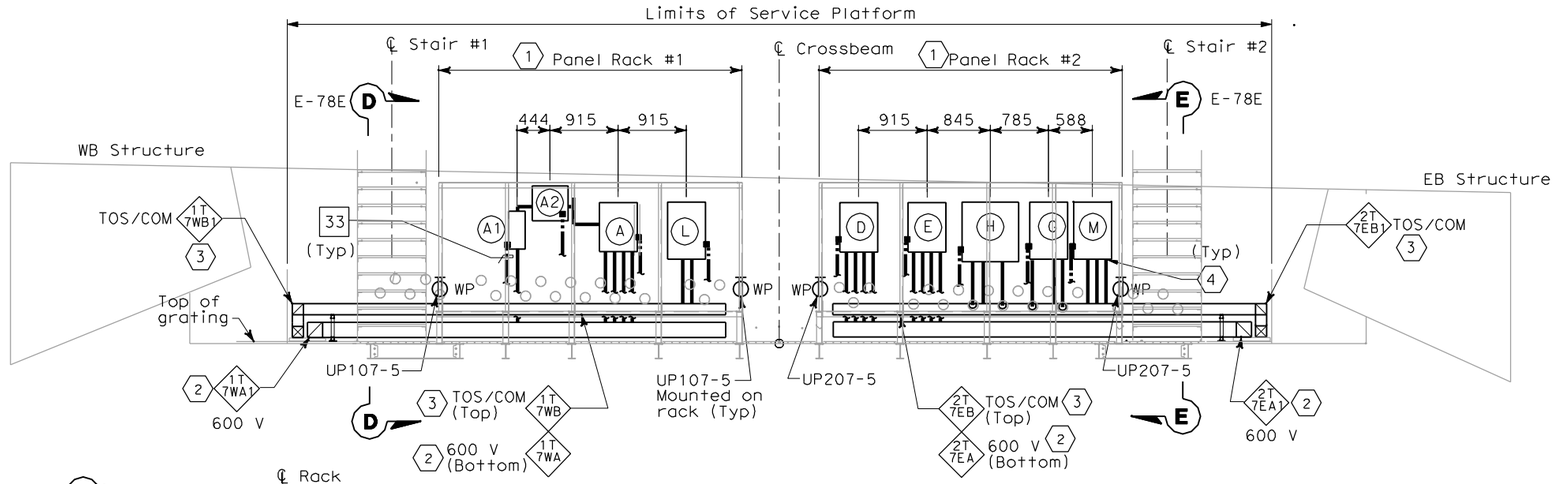

ELEVATION X-X
SCALE 1:40

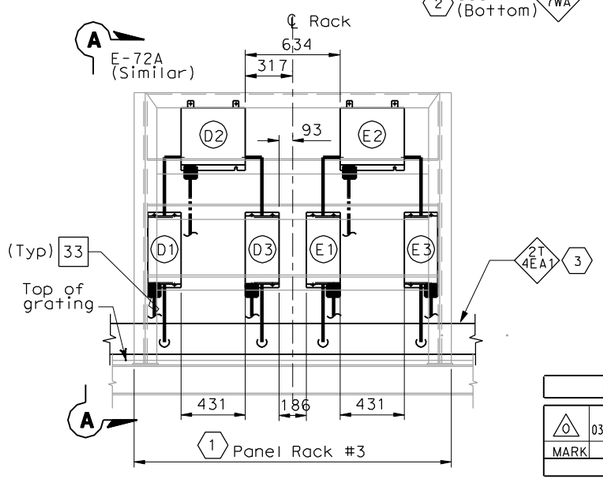

ELEVATION Z-Z
SCALE 1:20

REQUEST FOR INFORMATION NOT ADDRESSED IN THIS CCO REMAIN IN FORCE					
0	03/30/09	SERVICE PLATFORM ELECTRICAL CHANGES	RR MP	RG FW	55
MARK	DATE	DESCRIPTIONS	BY	CH'D	CCO#
REVISIONS					

CONTRACT CHANGE ORDER NO._____
SHEET_____ OF _____

SHEET NOTES:

1. For electrical panel support details, see AS-sheets, AS-13, AS-13A and AS-13B.
2. 600 V Stainless Steel Wireway, Nema 4X with cover.
3. Low level Stainless Steel Wireway, Nema 4X with cover.
4. Empty conduits shall be capped for future use.

NOTES:

1. Equipment dimensions mounted at panel racks shall be verified by Contractor prior to purchase and installation. Dimensions for equipment location are approximate and may be adjusted to suit field condition.
2. (SP) Denotes spare pipe sleeve for 78 mm conduit. Contractor to provide plug at each ends

WESTBOUND	CONDUIT NUMBERS
(A) Utility Panel, UP-107	4/263D 4/264A 4/076 4/077
(A1) Main Breaker for (A2)	4/263A 4/263B
(A2) 15 kVA Transformer	4/263B 4/263C
(L) TOS/COM-7WA Pull Box	4/265A 4/266A

EASTBOUND	CONDUIT NUMBERS
(D) Utility Panel, UP-207	5/263D 5/264A 5/076 5/077
(D1) Main Breaker for (D2)	5/263A 5/263B
(D2) 15 kVA Transformer	5/263B 5/263C
(D3) Feeder Breaker for (D)	5/263C 5/263E
(E) Lighting Panel LP-222	5/265D 5/079 5/080 5/081
(E1) Main Breaker for (E2)	5/265A 5/265B
(E2) 15 kVA Transformer	5/265B 5/265C
(E3) Feeder Breaker for (E)	5/265C 5/265E
(G) Telephone Terminal Box #TEL-7	5/267 5/270A 5/271
(H) Communication Terminal Box #COM-7	5/270 5/271A 5/272
(M) TOS/COM-7EA Pull Box	5/272A 5/266A 5/273A

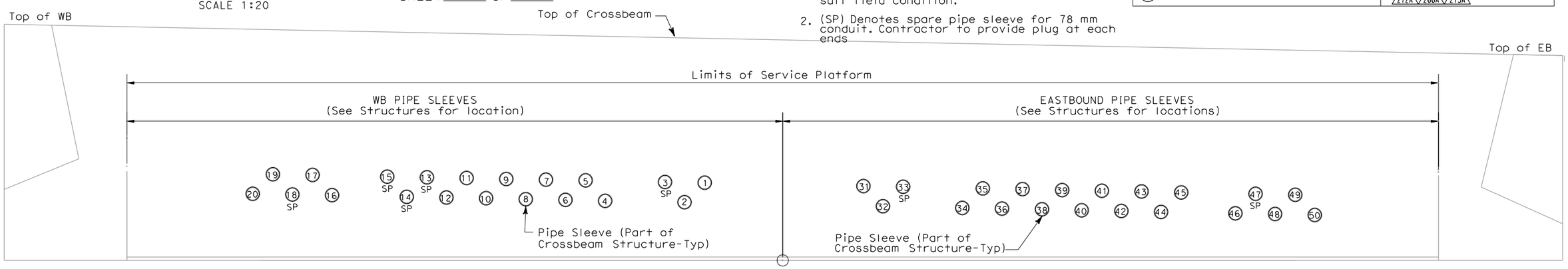

PIPE SLEEVE ELEVATION Y-Y (SEE SHEET E-117)
SCALE 1:20

DETAILS
SAS SUPERSTRUCTURE ROADWAY WESTBOUND PLATFORM 7 ARRANGEMENT
SCALE AS NOTED

THIS PLAN IS ACCURATE FOR ELECTRICAL WORK ONLY.

ALL DIMENSIONS ARE IN MILLIMETERS UNLESS OTHERWISE SHOWN.

E-74A

STATE OF CALIFORNIA - DEPARTMENT OF TRANSPORTATION
Caltrans

DESIGN OVERSIGHT
BEHZAD GOLEMOHAMMADI

CALCULATED/DESIGNED BY | CHECKED BY | DATE | REVISED BY | DATE REVISED

FOR REDUCED PLANS ORIGINAL SCALE IS IN MILLIMETERS 0 20 40 60 80

DGN FILE =>T:\13103\MS\pse\SAS Struc\CCO\SAS CCO55\2009-03-30_Issued for Submittal\04-0120f1_0137S01.dgn
USERNAME =>llorico

CU 04251 | EA 0120F1

LAST REVISION 00-00-00 | DATE PLOTTED => 4/1/2009 TIME PLOTTED => 11:22:48 AM

DIST	COUNTY	ROUTE	KILOMETER POST TOTAL PROJECT	SHEET No	TOTAL SHEETS
04	SF	80	13.2/13.9	138 R1	1204

12/19/02
REGISTERED ELECTRICAL ENGINEER DATE

12-6-04
PLANS APPROVAL DATE

REGISTERED PROFESSIONAL ENGINEER JENS ERLINGSSON No. 8249 Exp. 9/30/06 ELECTRICAL STATE OF CALIFORNIA

PB POWER, Inc.
A Parsons Brinckerhoff Company
303 Second St., Suite 700N
San Francisco, CA 94107-1317

The State of California or its officers or agents shall not be responsible for the accuracy or completeness of electronic copies of this plan sheet.

Caltrans now has a web site! To get to the web site, go to http://www.dot.ca.gov

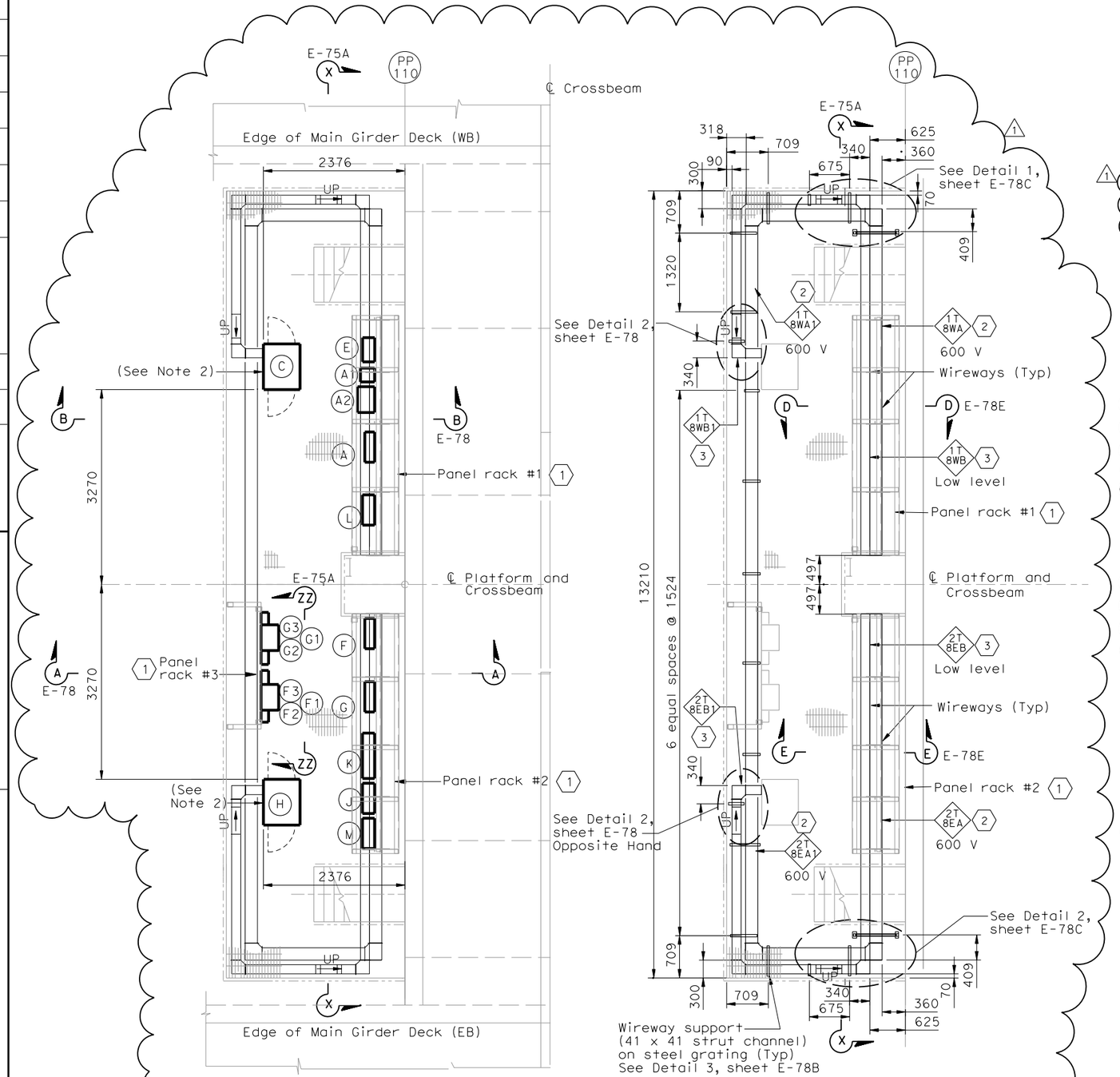

EQUIPMENT ARRANGEMENT PLAN
SCALE 1:40

WIREWAY PLAN
SCALE 1:40

EQUIPMENT SCHEDULE:

Equipment for Westbound

- (A) Utility Panel, UP-108, 100A 208/120 V, 3-phase, 4-wire
- (A1) 480 V Breaker for (A2) (Nema 4X) Size: 495 H X 232 W X 124 D
- (A2) 15 kVA Transformer, 3 phase, 60 hertz 480 V-208/120 V, 3 phase (Nema 4X) Size: 375 H X 485 W X 311 D
- (C) Remote Terminal Unit RTU #11W Size: 1830 H X 940 W X 610 D
- (L) TOS/COM-8WA Pull Box (PB-2B)

Equipment for Eastbound

- (F) Utility Panel, UP-208, 100 A, MLO 208/120 V, 3-phase, 4-wire
- (F1) 480 V Breaker for (F2) (Nema 4X) Size: 495 H X 232 W X 124 D
- (F2) 15 kVA Transformer, 3 phase, 60 hertz 480 V-208/120 V, 3 phase (Nema 4X) Size: 375 H X 485 W X 311 D
- (F3) Enclosed circuit breaker 10 kAIC 240 V 3 phase in NEMA 4X enclosure.
- (G) Lighting Panel LP-223, 100 A, MLO 208/120 V, 3-phase, 4-wire
- (G1) 480 V Breaker for (G2) (Nema 4X) Size: 495 H X 232 W X 124 D
- (G2) 15 kVA Transformer, 3 phase, 60 hertz 480 V-208/120 V, 3 phase (Nema 4X) Size: 375 H X 485 W X 311 D
- (G3) Enclosed circuit breaker 10 kAIC 240 V 3 phase in NEMA 4X enclosure.
- (H) Remote Terminal Unit RTU #11E Size: 1830 H X 940 W X 610 D
- (M) TOS/COM-8EA Pull Box (PB-2B)

Equipment Common for Westbound/Eastbound

- (E) Navigation Relay Cabinet NAP-8 (PB-6C)
- (J) Telephone Terminal Box #TEL-8 (PB-7C)
- (K) Communication Terminal Box COM-8 (PB-7B)

SHEET NOTES:

1. For electrical panel support details, see AS-sheets.
2. 600 V Stainless steel wireway, Nema 4X with cover.
3. Low level Stainless steel wireway, Nema 4X with cover.

NOTES:

1. The contractor shall verify the sizes and mounting dimensions of all rack mounted equipment prior to the fabrication of service platform racks. The contractor shall also verify the wireway mounting dimensions and support locations and make adjustment as needed to suit field condition.
2. Contractor to provide cover plate and sealant to all cabinets with open bottom. Cover plate shall be of the same material. See Sheet E-78B for details.
3. References:
   - For platform 5 conduit, lighting and grounding plan, see sheet E-118.
   - For location of platform 8, see sheet E-50.
   - TOS are shown for conduit routing only. For typical details of TOS controller and devices, see sheets E-344 through E-361.
   - For schedule of utility panel UP-108, see sheet E-63.
   - For schedule of utility panel UP-208, see sheet E-154.
   - For schedule of lighting panel LP-223, see sheet E-157.
   - For typical panel arrangement details of SCADA communications terminal box, see sheet E-321.
   - For pull box schedule, see sheet E-83.
   - For circuit and conduit/cable tray schedules, see sheets starting at E-401.
   - For platform elevations, see sheet E-75A.

REGISTERED PROFESSIONAL ENGINEER FADI WALIEDDINE No. 11465 Exp. 12/31/2009 ELECTRICAL STATE OF CALIFORNIA

FOR REVISION ONLY

REQUEST FOR INFORMATION NOT ADDRESSED IN THIS CCO REMAIN IN FORCE

MARK	DATE	DESCRIPTIONS	BY	CH'D	CCO#
1	03/30/09	SERVICE PLATFORM ELECTRICAL CHANGES	RR MP	RG FW	55

REVISIONS

CONTRACT CHANGE ORDER NO._____
SHEET_____ OF _____

DETAILS
SAS SUPERSTRUCTURE ROADWAY WESTBOUND PLATFORM 8 ARRANGEMENT
SCALE AS NOTED

E-75

DATE	REVISED BY
7/01	JP
12/01	BL

DATE REVISED
CALCULATED/DESIGNED BY
CHECKED BY

DESIGN OVERSIGHT
BEHZAD GOLEHAMMADI

STATE OF CALIFORNIA - DEPARTMENT OF TRANSPORTATION
Caltrans

THIS PLAN IS ACCURATE FOR ELECTRICAL WORK ONLY.

ALL DIMENSIONS ARE IN MILLIMETERS UNLESS OTHERWISE SHOWN.

FOR REDUCED PLANS ORIGINAL SCALE IS IN MILLIMETERS 0 20 40 60 80

DGN FILE =>T:\13103\MS\pse\SAS Struc\CCO\SAS CCO55\04-0120f1_0138R01.dgn
USERNAME =>garciar

CU 04251 EA 0120F1

LAST REVISION 00-00-00
DATE PLOTTED => 4/2/2009
TIME PLOTTED => 3:37:15 PM

DIST	COUNTY	ROUTE	KILOMETER POST TOTAL PROJECT	SHEET No	TOTAL SHEETS
04	SF	80	13.2/13.9	138 S1	1204

REGISTERED ELECTRICAL ENGINEER 6/12/08 DATE

PLANS APPROVAL DATE

REGISTERED PROFESSIONAL ENGINEER FADI WALIEDDINE No. 11465 Exp. 12/31/2009 ELECTRICAL STATE OF CALIFORNIA

PB AMERICAS, Inc.
A Parsons Brinckerhoff Company
303 Second St., Suite 700N
San Francisco, CA 94107-1317

The State of California or its officers or agents shall not be responsible for the accuracy or completeness of electronic copies of this plan sheet.

Caltrans now has a web site! To get to the web site, go to http://www.dot.ca.gov

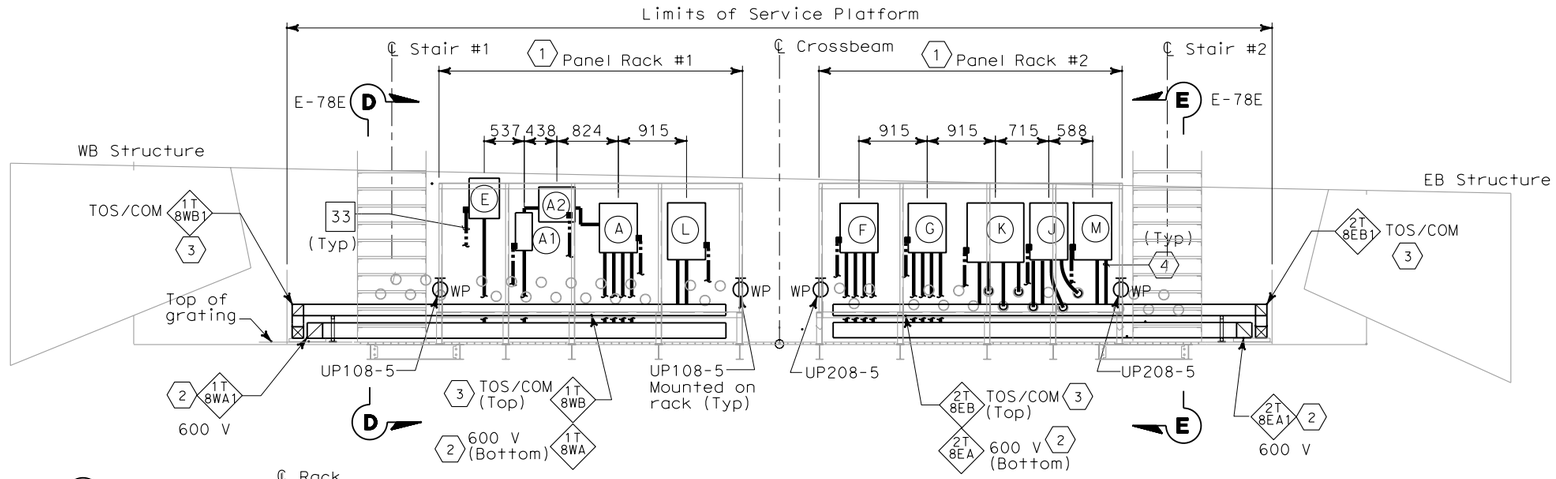

ELEVATION X-X

SCALE 1:40

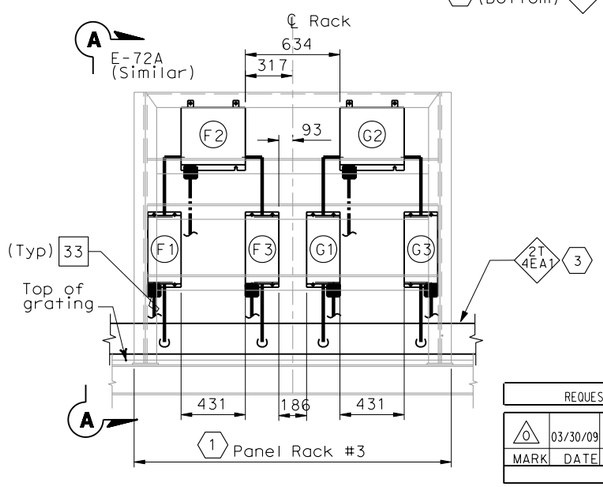

ELEVATION Z-Z

SCALE 1:20

SHEET NOTES:

1. For electrical panel support details, see AS-sheets, AS-13, AS-13A and AS-13B.
2. 600 V Stainless Steel Wireway, Nema 4X with cover.
3. Low level Stainless Steel Wireway, Nema 4X with cover.
4. Empty conduits shall be capped for future use.

REQUEST FOR INFORMATION NOT ADDRESSED IN THIS CCO REMAIN IN FORCE					
0	03/30/09	SERVICE PLATFORM ELECTRICAL CHANGES	RR MP	RG FW	55
MARK	DATE	DESCRIPTIONS	BY	CH'D	CCO#
REVISIONS					

CONTRACT CHANGE ORDER NO._____
SHEET_____ OF _____

NOTES:

1. Equipment dimensions mounted at panel racks shall be verified by Contractor prior to purchase and installation. Dimensions for equipment location are approximate and may be adjusted to suit field condition.
2. (SP) Denotes spare pipe sleeve for 78 mm conduit. Contractor to provide plug at each ends

WESTBOUND	CONDUIT NUMBERS
(A) Utility Panel, UP-108	4 283D, 4 284A, 4 101, 4 102
(A1) Main Breaker for (A2)	4 283A, 4 283B
(A2) 15 kVA Transformer	4 283B, 4 283C
(L) TOS/COM-8WA Pull Box	4 285A, 4 286A
(E) Navigation Relay Cab. NAP-8	4 104

EASTBOUND	CONDUIT NUMBERS
(F) Utility Panel, UP-208	5 283D, 5 284A, 5 101, 5 102
(F1) Main Breaker for (F2)	5 283A, 5 283B
(F2) 15 kVA Transformer	5 283B, 5 283C
(F3) Feeder Breaker for (F)	5 283C, 5 283E
(G) Lighting Panel LP-223	5 285D, 5 104, 5 105, 5 106
(G1) Main Breaker for (G2)	5 285A, 5 285B
(G2) 15 kVA Transformer	5 285B, 5 285C
(G3) Feeder Breaker for (G)	5 285C, 5 285E
(J) Telephone Terminal Box #TEL-8	5 289, 5 289A, 5 277, 5 276
(K) Communication Terminal Box #COM-8	5 290A, 5 286, 5 275, 5 290
(M) TOS/COM-8EA Pull Box	5 286A, 5 200A, 5 200B

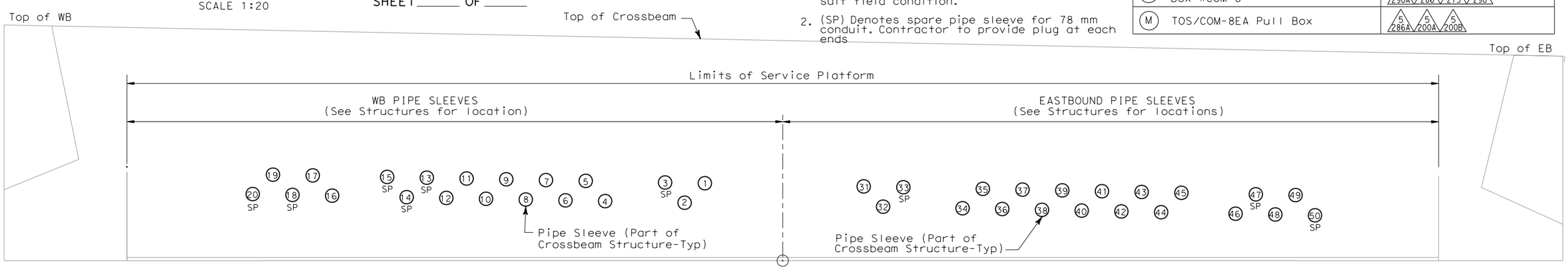

PIPE SLEEVE ELEVATION Y-Y

(SEE SHEET E-118)

SCALE 1:20

DETAILS
SAS SUPERSTRUCTURE ROADWAY WESTBOUND PLATFORM 8 ARRANGEMENT

SCALE AS NOTED

E-75A

THIS PLAN IS ACCURATE FOR ELECTRICAL WORK ONLY.

ALL DIMENSIONS ARE IN MILLIMETERS UNLESS OTHERWISE SHOWN.

FOR REDUCED PLANS ORIGINAL SCALE IS IN MILLIMETERS 0 20 40 60 80

DGN FILE =>T:\13103\MS\pse\SAS Struc\CCO\SAS CC055\04-0120f1_0138S01.dgn
USERNAME =>garciar

CU 04251 EA 0120F1

LAST REVISION 00-00-00 DATE PLOTTED => 3/31/2009 TIME PLOTTED => 2:56:31 PM

STATE OF CALIFORNIA - DEPARTMENT OF TRANSPORTATION

DESIGN OVERSIGHT BEHZAD GOLEMOHAMMADI

CALCULATED/DESIGNED BY JP CHECKED BY BL

DATE 7/01 12/01 REVISED BY DATE REVISED

DIST	COUNTY	ROUTE	KILOMETER POST TOTAL PROJECT	SHEET No	TOTAL SHEETS
04	SF	80	13.2/13.9	139 R1	1204

REGISTERED ELECTRICAL ENGINEER 12/19/02 DATE

12-6-04
PLANS APPROVAL DATE

REGISTERED PROFESSIONAL ENGINEER JENS ERLINGSSON No. 8249 Exp. 9/30/06 ELECTRICAL STATE OF CALIFORNIA

PB POWER, Inc.
A Parsons Brinckerhoff Company
303 Second St., Suite 700N
San Francisco, CA 94107-1317

The State of California or its officers or agents shall not be responsible for the accuracy or completeness of electronic copies of this plan sheet.

Caltrans now has a web site! To get to the web site, go to http://www.dot.ca.gov

Caltrans Metric

REGISTERED PROFESSIONAL ENGINEER FADI WALIEDDINE No. 11465 Exp. 12/31/2009 ELECTRICAL STATE OF CALIFORNIA

FOR REVISION ONLY 1

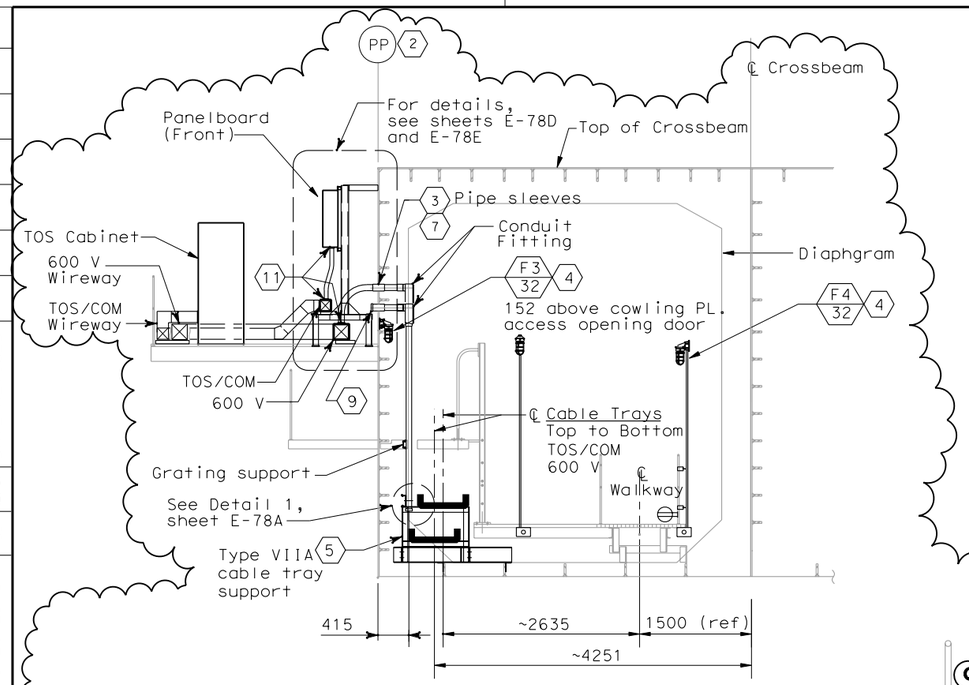

SECTION B-B (10)
SCALE 1:25

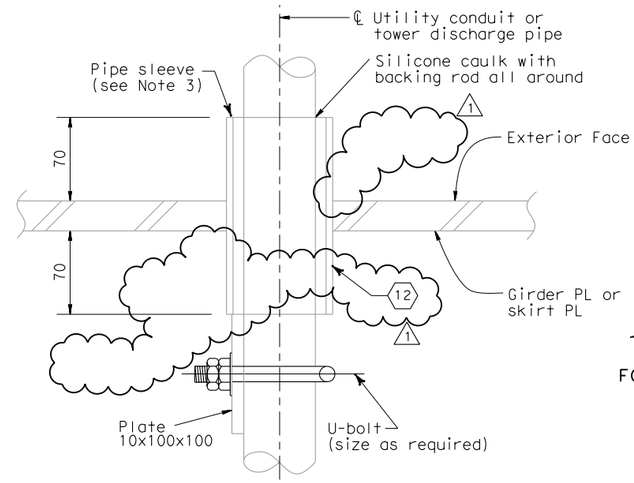

DETAIL 1
TYPICAL UTILITY CONDUIT PENETRATION DETAIL
SCALE 1:10

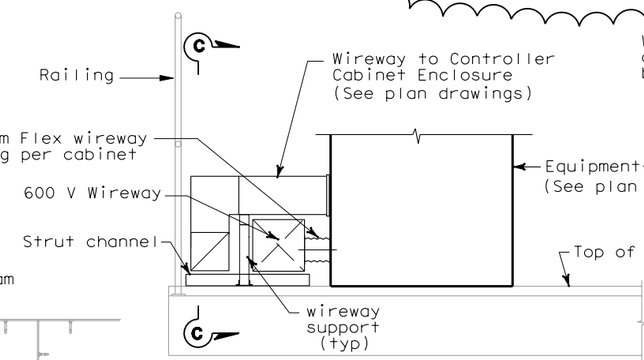

DETAIL 2
SHOWN FOR TOS CONTROLLER CABINET
(SIMILAR TO RTU AND STRONG MOTION RECORDER CABINETS)
NO SCALE

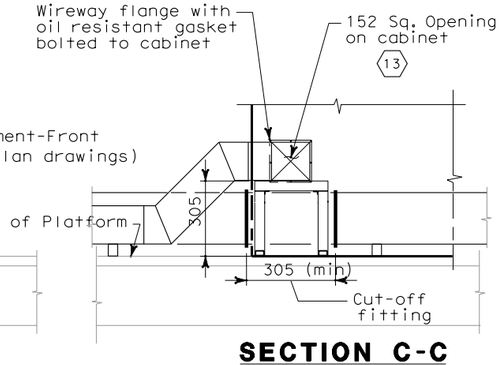

SECTION C-C
NO SCALE

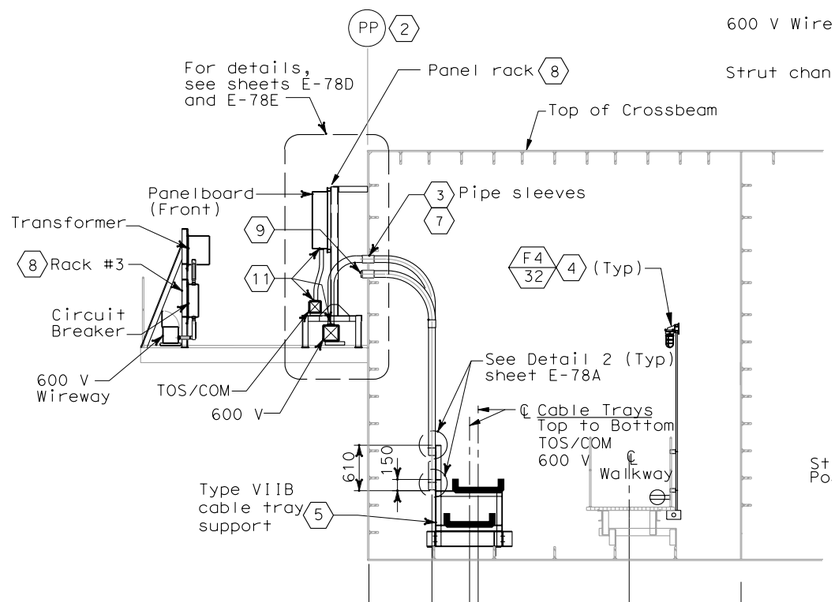

SECTION A-A (10)
SCALE 1:25

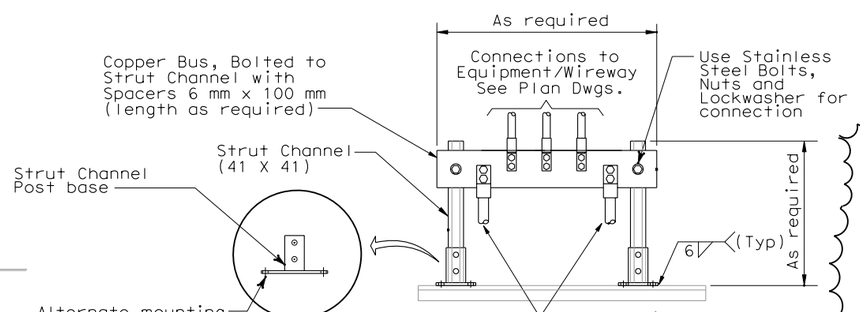

DETAIL 5
GROUNDING BAR
NO SCALE

SHEET NOTES:

1. Deleted.
2. Panel Points 14, 32, 50, 80 and 110. For platform arrangement drawings, see sheets E-71 thru E-75.
3. For location of pipe sleeves, see Typical Crossbeam Details. For conduit number through pipe sleeves, see sheets:
   - -Service platform #4 - E-71A, E-114
   - -Service platform #5 - E-72A, E-115
   - -Service platform #6 - E-73A, E-116
   - -Service platform #7 - E-74A, E-117
   - -Service platform #8 - E-75A, E-118
   - -Crossbeam - E-114A
4. For typical lighting installation, see sheet E-123.
5. For location and type of cable tray support, see drawings AS-16K, AS-16L, AS-16M, AS-16N and AS-16P.
6. Deleted.
7. See Detail 1. (Typ)
8. For panel rack supports, see sheets AS-13, AS-13A and AS-13B
9. Empty sleeves shall be capped for future use.
10. Section A-A and B-B see sheets E-71 thru E-75 and E-114 thru E-118.
11. Provide insulated ground bushing at end of conduit.
12. See Utility Detail No. 1 (Sheet No. 965 of 1204) for conduit penetration through girder plate.
13. Location of opening shall be verified that there is no interference with components inside panel. Adjust location of opening as required.

REQUEST FOR INFORMATION NOT ADDRESSED IN THIS CCO REMAIN IN FORCE

MARK	DATE	DESCRIPTIONS	BY	CH'D	CCO#
1	03/30/09	SERVICE PLATFORM ELECTRICAL CHANGES	RR MP	RG FW	55

REVISIONS

CONTRACT CHANGE ORDER NO._____
SHEET_____ OF_____

DETAILS
SAS SUPERSTRUCTURE ROADWAY WESTBOUND PLATFORM SECTIONS
SCALE AS NOTED

E-78

DATE	BY	REVISED
7/01	JP	12/01 BL

CALCULATED/DESIGNED BY JP
CHECKED BY BL

DESIGN OVERSIGHT BEHZAD GOLEMOHAMMADI

STATE OF CALIFORNIA - DEPARTMENT OF TRANSPORTATION
Caltrans

THIS PLAN IS ACCURATE FOR ELECTRICAL WORK ONLY.

ALL DIMENSIONS ARE IN MILLIMETERS UNLESS OTHERWISE SHOWN.

FOR REDUCED PLANS ORIGINAL SCALE IS IN MILLIMETERS 0 20 40 60 80

DGN FILE =>T:\13103\MS\pse\SAS Struc\CCO\SAS CCO55\04-0120f1_0139R01.dgn
USERNAME =>garciar

CU 04251 EA 0120F1

LAST REVISION 00-00-00
DATE PLOTTED => 3/31/2009
TIME PLOTTED => 2:55:35 PM

DIST	COUNTY	ROUTE	KILOMETER POST TOTAL PROJECT	SHEET No	TOTAL SHEETS
04	SF	80	13.2/13.9	139 S1	1204

REGISTERED ELECTRICAL ENGINEER — DATE 6/12/08

PLANS APPROVAL DATE

REGISTERED PROFESSIONAL ENGINEER — FADI WALIEDDINE No. 11465 Exp. 12/31/2009 ELECTRICAL — STATE OF CALIFORNIA

PB POWER, Inc.
A Parsons Brinckerhoff Company
303 Second St., Suite 700N
San Francisco, CA 94107-1317

The State of California or its officers or agents shall not be responsible for the accuracy or completeness of electronic copies of this plan sheet.

Caltrans now has a web site! To get to the web site, go to http://www.dot.ca.gov

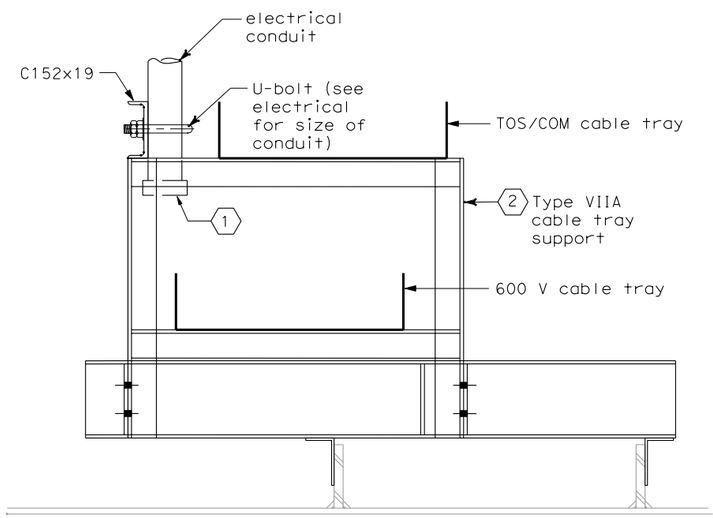

DETAIL 1 (3)
NO SCALE

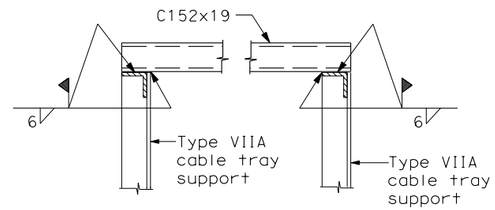

SECTION A-A
NO SCALE

SHEET NOTES:

1. Provide insulated ground bushing at end of conduit.
2. For location and type of cable tray support, see drawings AS-16K, AS-16L, AS-16M, AS-16N and AS-16P.
3. For location of Detail 1 and Detail 2 see drawing E-78.

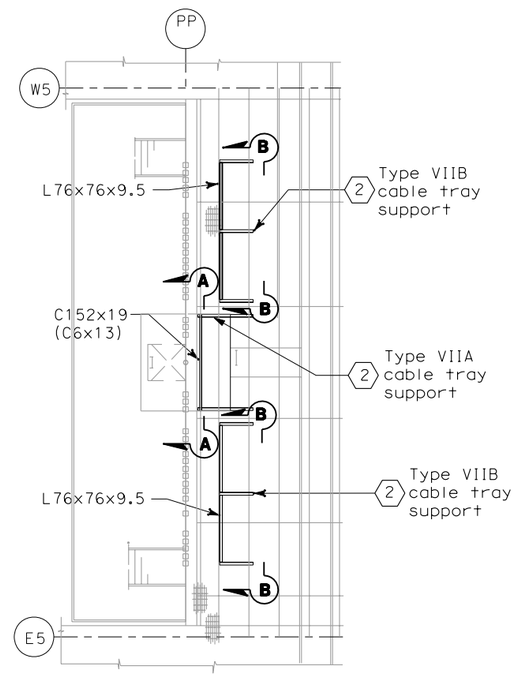

CABLE TRAY SUPPORT INSIDE CROSSBEAM
SCALE 1:80

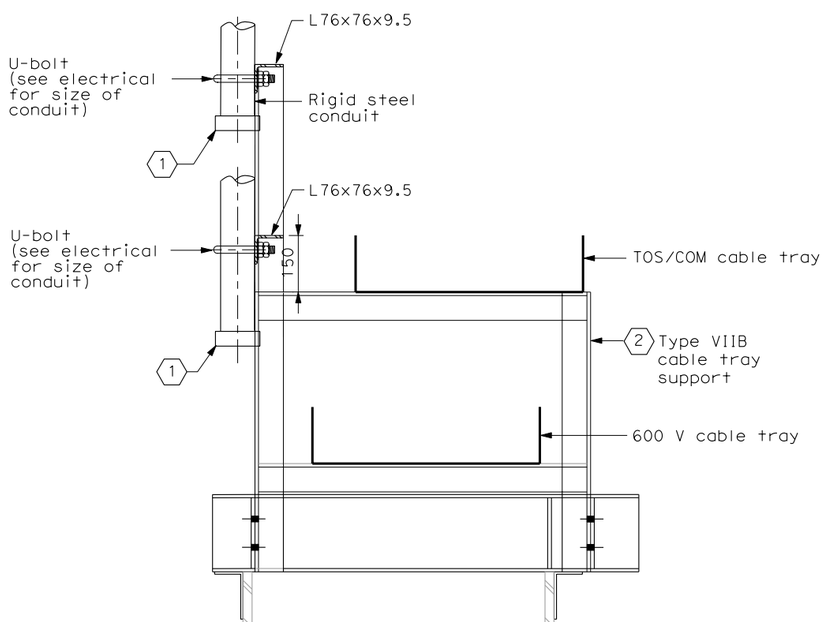

DETAIL 2 (3)
NO SCALE

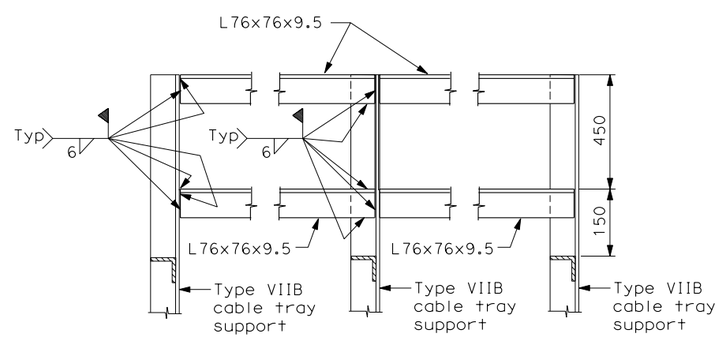

SECTION B-B
NO SCALE

REQUEST FOR INFORMATION NOT ADDRESSED IN THIS CCO REMAIN IN FORCE					
0	03/30/09	SERVICE PLATFORM ELECTRICAL CHANGES	RR	RG SE	55
MARK	DATE	DESCRIPTIONS	BY	CH'D	CCO#
REVISIONS					

CONTRACT CHANGE ORDER NO._____
SHEET _____ OF _____

DETAILS
SAS SUPERSTRUCTURE ROADWAY WESTBOUND PLATFORM SECTIONS
SCALE AS NOTED

E-78A

ALL DIMENSIONS ARE IN MILLIMETERS UNLESS OTHERWISE SHOWN.

FOR REDUCED PLANS ORIGINAL SCALE IS IN MILLIMETERS 0 20 40 60 80

DGN FILE =>T:\13103\MS\pse\SAS Struc\CCO\SAS CC055\04-0120f1_0139S01.dgn
USERNAME =>garciar

CU 04251 | EA 0120F1

DESIGN OVERSIGHT — BEHZAD GOLEMOHAMMADI

CALCULATED/DESIGNED BY	JP	DATE 7/01	REVISED BY
CHECKED BY	BL	12/01	DATE REVISED

STATE OF CALIFORNIA - DEPARTMENT OF TRANSPORTATION

LAST REVISION 00-00-00 — DATE PLOTTED => 3/31/2009 TIME PLOTTED => 2:54:36 PM

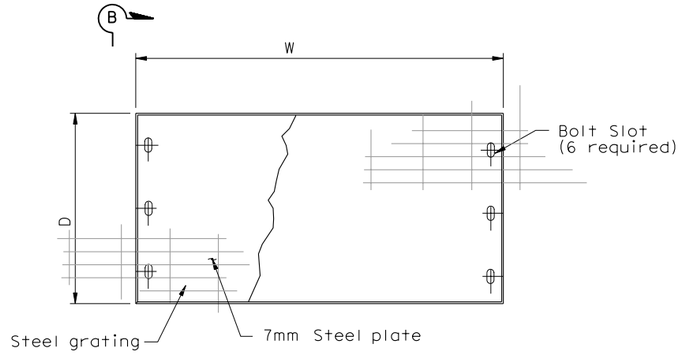

PLAN
NTS

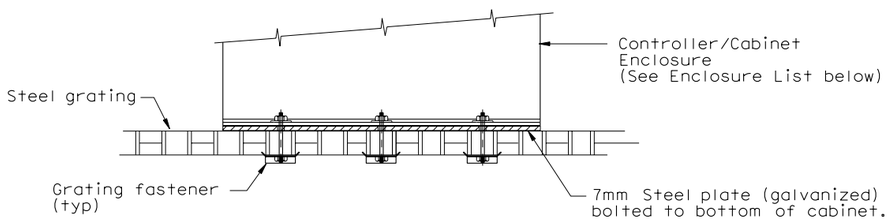

SECTION B-B
NTS

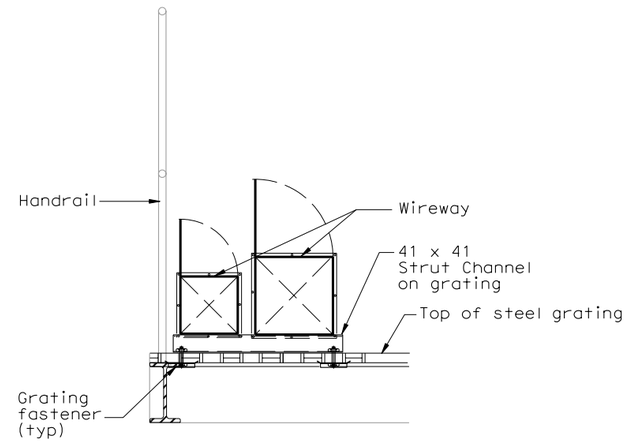

DETAIL 3
WIREWAY SUPPORT ON STEEL GRATING
(See sheets E-71, E-72, E-73, E-74 and E-75)

CONTROLLER CABINET ENCLOSURES			
Location	Nameplate	No.	Cabinet/Terminal Box Size
Service Platform #4	Controller Cabinet	TOS-4WA	1625 H x 615 W x 768 D
Service Platform #4	Controller Cabinet	TOS-4WB	1625 H x 615 W x 768 D
Service Platform #4	Controller Cabinet	TOS-4EA	1625 H x 615 W x 768 D
Service Platform #5	Remote Terminal Unit	RTU #10W	1830 H x 940 W x 610 D
Service Platform #5	Strong Motion Recorder #2	Box A	1900 H x 1620 W x 660 D
Service Platform #5	Strong Motion Recorder #2	Box B	1900 H x 1620 W x 660 D
Service Platform #5	Remote Terminal Unit	RTU #10E	1830 H x 940 W x 610 D
Service Platform #6	Controller Cabinet	TOS-6WA	1625 H x 615 W x 768 D
Service Platform #6	Controller Cabinet	TOS-6EA	1625 H x 615 W x 768 D
Service Platform #7	Controller Cabinet	TOS-7WA	1625 H x 615 W x 768 D
Service Platform #7	Controller Cabinet	TOS-7EA	1625 H x 615 W x 768 D
Service Platform #8	Remote Terminal Unit	RTU #11W	1830 H x 940 W x 610 D
Service Platform #8	Remote Terminal Unit	RTU #11E	1830 H x 940 W x 610 D

DIST	COUNTY	ROUTE	KILOMETER POST TOTAL PROJECT	SHEET No	TOTAL SHEETS
04	SF	80	13.2/13.9	139 S2	1204

REGISTERED ELECTRICAL ENGINEER — 6/12/08 DATE

REGISTERED PROFESSIONAL ENGINEER — FADI WALIEDDINE No. 11465 Exp. 12/31/2009 ELECTRICAL — STATE OF CALIFORNIA

PLANS APPROVAL DATE

PB AMERICAS, Inc.
A Parsons Brinckerhoff Company
303 Second St., Suite 700N
San Francisco, CA 94107-1317

The State of California or its officers or agents shall not be responsible for the accuracy or completeness of electronic copies of this plan sheet.

Caltrans now has a web site! To get to the web site, go to http://www.dot.ca.gov

REQUEST FOR INFORMATION NOT ADDRESSED IN THIS CCO REMAIN IN FORCE					
0	03/30/09	SERVICE PLATFORM ELECTRICAL CHANGES	RR MP	RG SE	55
MARK	DATE	DESCRIPTIONS	BY	CH'D	CCO#
REVISIONS					

CONTRACT CHANGE ORDER NO._____
SHEET_____ OF _____

DETAILS
SAS SUPERSTRUCTURE ROADWAY WESTBOUND CONTROLLER CABINETS ENCLOSURE
SCALE AS NOTED

E-78B

DESIGN OVERSIGHT — BEHZAD GOLEMOHAMMADI

CALCULATED/DESIGNED BY — CHECKED BY — DATE — REVISED BY — DATE REVISED

STATE OF CALIFORNIA - DEPARTMENT OF TRANSPORTATION — Caltrans

THIS PLAN IS ACCURATE FOR ELECTRICAL WORK ONLY.

ALL DIMENSIONS ARE IN MILLIMETERS UNLESS OTHERWISE SHOWN.

FOR REDUCED PLANS ORIGINAL SCALE IS IN MILLIMETERS 0 20 40 60 80

DGN FILE =>T:\13103\MS\pse\SAS Struc\CCO\SAS CCO55\04-0120f1_0139S02.dgn
USERNAME =>garciar

CU 04251 — EA 0120F1

LAST REVISION 00-00-00 — DATE PLOTTED => 3/31/2009 TIME PLOTTED => 2:54:06 PM

DIST	COUNTY	ROUTE	KILOMETER POST TOTAL PROJECT	SHEET No	TOTAL SHEETS
04	SF	80	13.2/13.9	139 S3	1204

REGISTERED ELECTRICAL ENGINEER 3/30/09 DATE

PLANS APPROVAL DATE

REGISTERED PROFESSIONAL ENGINEER FADI WALIEDDINE No. 11465 Exp. 12/31/2009 ELECTRICAL STATE OF CALIFORNIA

PB AMERICAS, Inc.
A Parsons Brinckerhoff Company
303 Second St., Suite 700N
San Francisco, CA 94107-1317

The State of California or its officers or agents shall not be responsible for the accuracy or completeness of electronic copies of this plan sheet.

Caltrans now has a web site! To get to the web site, go to http://www.dot.ca.gov

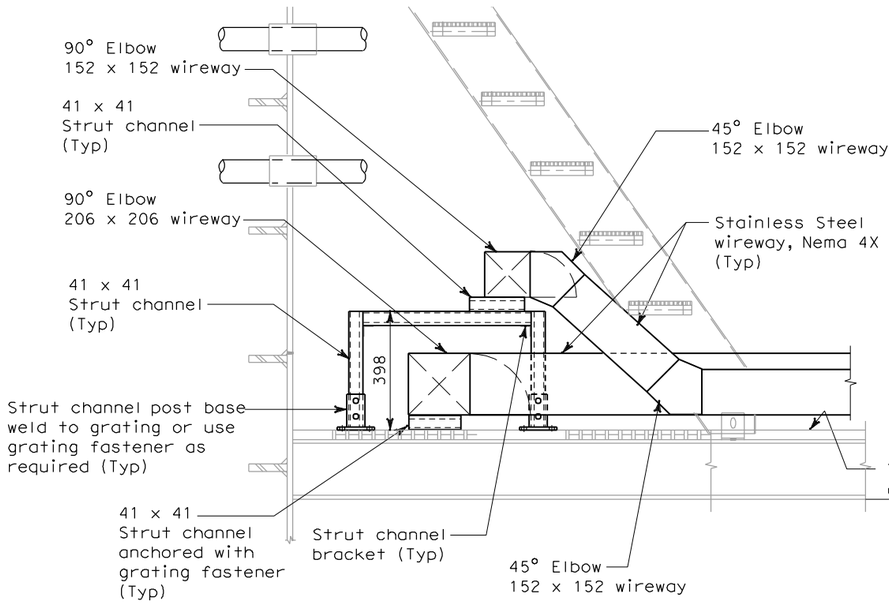

DETAIL 1

SCALE: 1:10

(See sheets E-71, E-72, E-73, E-74 and E-75)

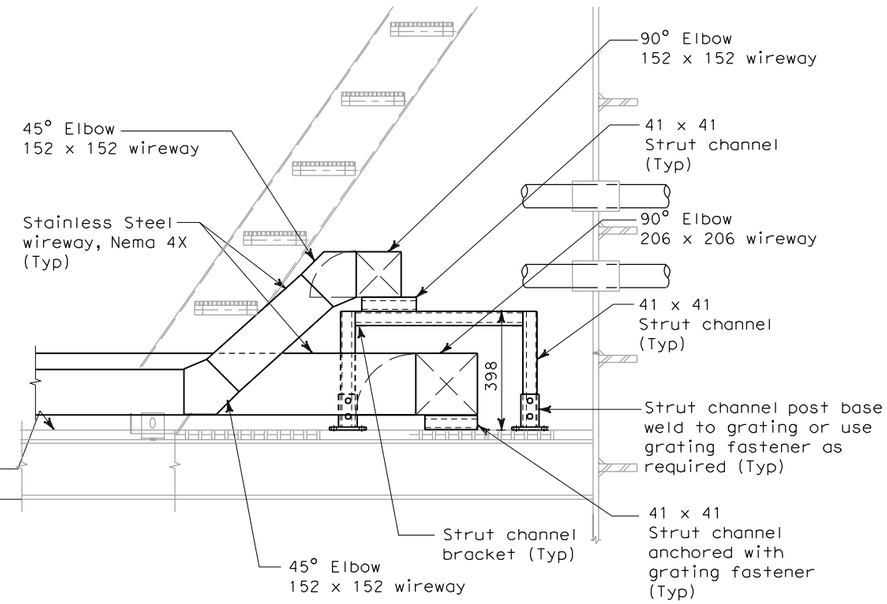

DETAIL 2

SCALE: 1:10

(See sheets E-71, E-72, E-73, E-74 and E-75)

REQUEST FOR INFORMATION NOT ADDRESSED IN THIS CCO REMAIN IN FORCE					
0	03/30/09	SERVICE PLATFORM ELECTRICAL CHANGES	RR MP	RG SE	55
MARK	DATE	DESCRIPTIONS	BY	CH'D	CCO#
REVISIONS					

CONTRACT CHANGE ORDER NO._____

SHEET_____ OF _____

DETAILS
SAS SUPERSTRUCTURE ROADWAY WESTBOUND PLATFORM SECTIONS

SCALE AS NOTED

E-78C

ALL DIMENSIONS ARE IN MILLIMETERS UNLESS OTHERWISE SHOWN

DATE	REVISED BY	DATE REVISED

CALCULATED/DESIGNED BY

CHECKED BY

DESIGN OVERSIGHT

BEHZAD GOLEMOHAMMADI

STATE OF CALIFORNIA - DEPARTMENT OF TRANSPORTATION

Caltrans

LAST REVISION 00-00-00

DATE PLOTTED => 4/11/2009
TIME PLOTTED => 8:57:40 AM

FOR REDUCED PLANS ORIGINAL SCALE IS IN MILLIMETERS 0 20 40 60 80

DGN FILE =>T:\13103\MS\pse\SAS Struc\CCO\SAS CCO55\2009-03-30_Issued for Submittal\04-0120f1_0139S03.dgn
USERNAME =>llorico

CU 04251

EA 0120F1

DIST	COUNTY	ROUTE	KILOMETER POST TOTAL PROJECT	SHEET No	TOTAL SHEETS
04	SF	80	13.2/13.9	139 S4	1204

REGISTERED ELECTRICAL ENGINEER DATE

PLANS APPROVAL DATE

REGISTERED PROFESSIONAL ENGINEER FADI WALIEDDINE No. 11465 Exp. 12/31/2009 ELECTRICAL STATE OF CALIFORNIA

PB AMERICAS, Inc.
A Parsons Brinckerhoff Company
303 Second St., Suite 700N
San Francisco, CA 94107-1317

The State of California or its officers or agents shall not be responsible for the accuracy or completeness of electronic copies of this plan sheet.

Caltrans now has a web site! To get to the web site, go to http://www.dot.ca.gov

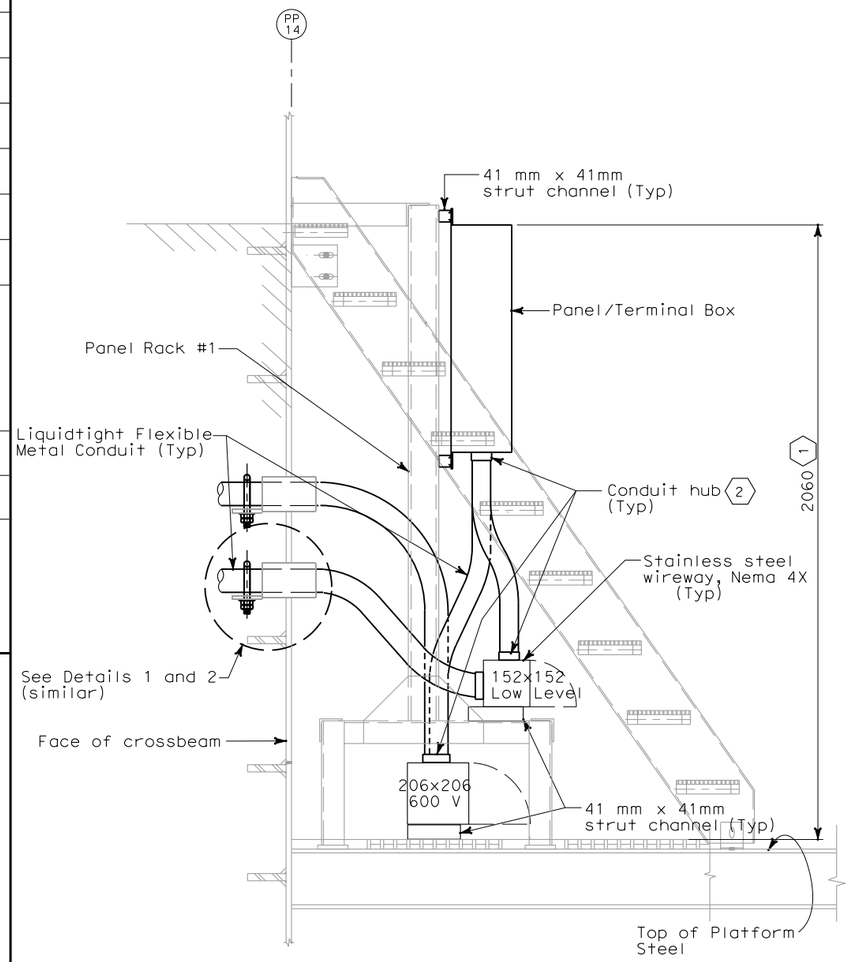

SECTION D-D
SCALE: 1:10

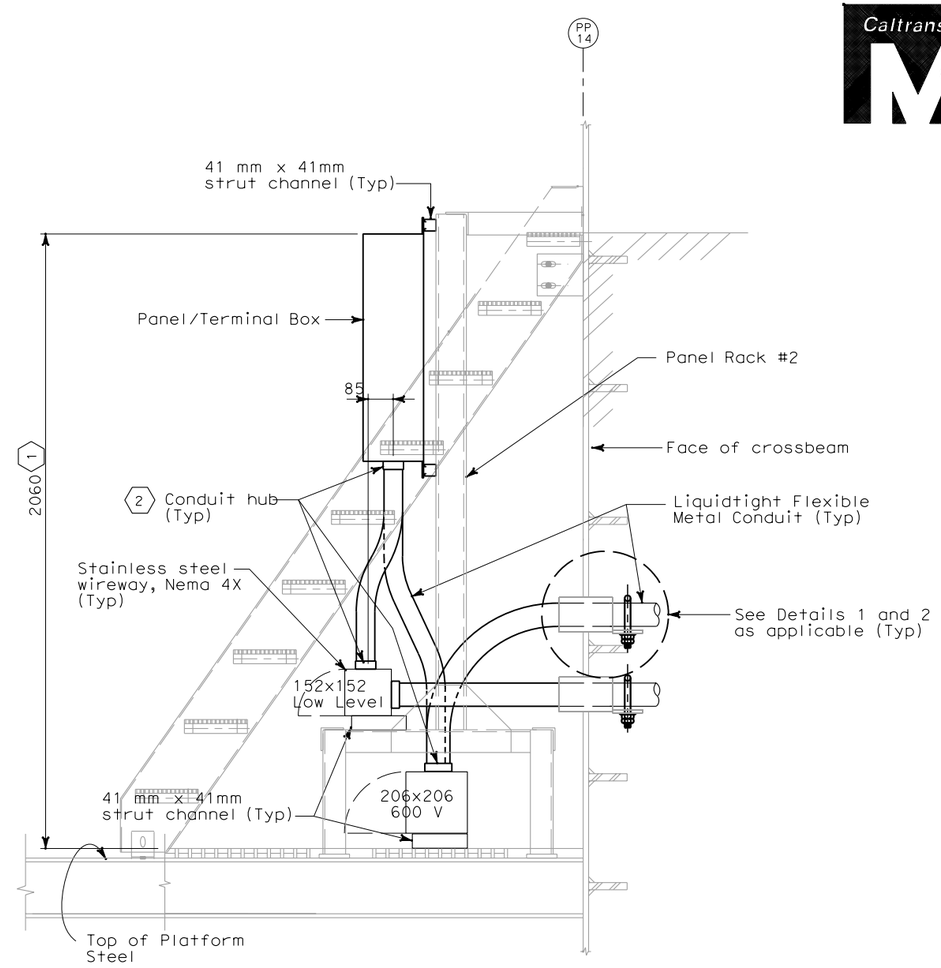

SECTION E-E
SCALE: 1:10

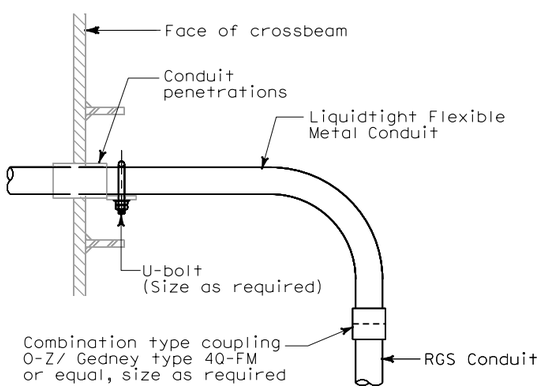

DETAIL 1
NOT TO SCALE
See Section A-A, sheet E-78

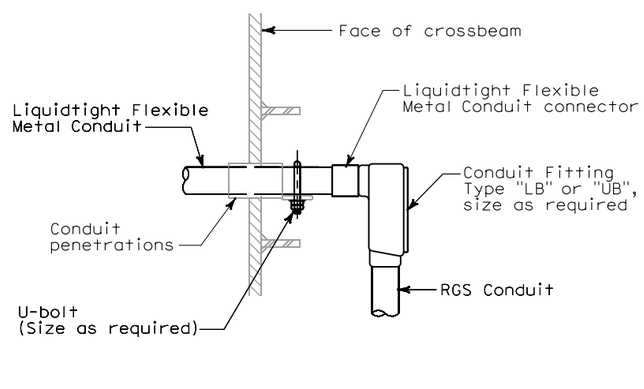

DETAIL 2
NOT TO SCALE
See Section B-B, sheet E-78

SHEET NOTES:

1. Specified dimension is approximate and may be adjusted to suit field condition.
2. All conduit hubs and fittings shall be watertight and PVC coated when installed outdoor. Conduit hubs shall be provided with insulated ground bushing.

REQUEST FOR INFORMATION NOT ADDRESSED IN THIS CCO REMAIN IN FORCE

MARK	DATE	DESCRIPTIONS	BY	CH'D	CCO#
0	03/30/09	SERVICE PLATFORM ELECTRICAL CHANGES	RR MP	RG SE	55

REVISIONS

CONTRACT CHANGE ORDER NO._____
SHEET_____ OF _____

DETAILS
SAS SUPERSTRUCTURE ROADWAY WESTBOUND PLATFORM #4 SECTIONS
SCALE AS NOTED

ALL DIMENSIONS ARE IN MILLIMETERS UNLESS OTHERWISE SHOWN

E-78D

STATE OF CALIFORNIA - DEPARTMENT OF TRANSPORTATION
Caltrans

DESIGN OVERSIGHT: BEHZAD GOLEMOHAMMADI

CALCULATED/DESIGNED BY | CHECKED BY | DATE | REVISED BY | DATE REVISED

LAST REVISION 00-00-00 | DATE PLOTTED => 4/3/2009 | TIME PLOTTED => 8:03:10 AM

FOR REDUCED PLANS ORIGINAL SCALE IS IN MILLIMETERS 0 20 40 60 80

DGN FILE =>T:\13103\MS\pse\SAS Struc\CCO\SAS CCO55\04-0120f1_0139S04.dgn
USERNAME =>garciar

CU 04251 | EA 0120F1

DIST	COUNTY	ROUTE	KILOMETER POST TOTAL PROJECT	SHEET No	TOTAL SHEETS
04	SF	80	13.2/13.9	139 S5	1204

REGISTERED ELECTRICAL ENGINEER 3/30/09 DATE

PLANS APPROVAL DATE

REGISTERED PROFESSIONAL ENGINEER FADI WALIEDDINE No. 11465 Exp. 12/31/2009 ELECTRICAL STATE OF CALIFORNIA

PB AMERICAS, Inc.
A Parsons Brinckerhoff Company
303 Second St., Suite 700N
San Francisco, CA 94107-1317

The State of California or its officers or agents shall not be responsible for the accuracy or completeness of electronic copies of this plan sheet.

Caltrans now has a web site! To get to the web site, go to http://www.dot.ca.gov

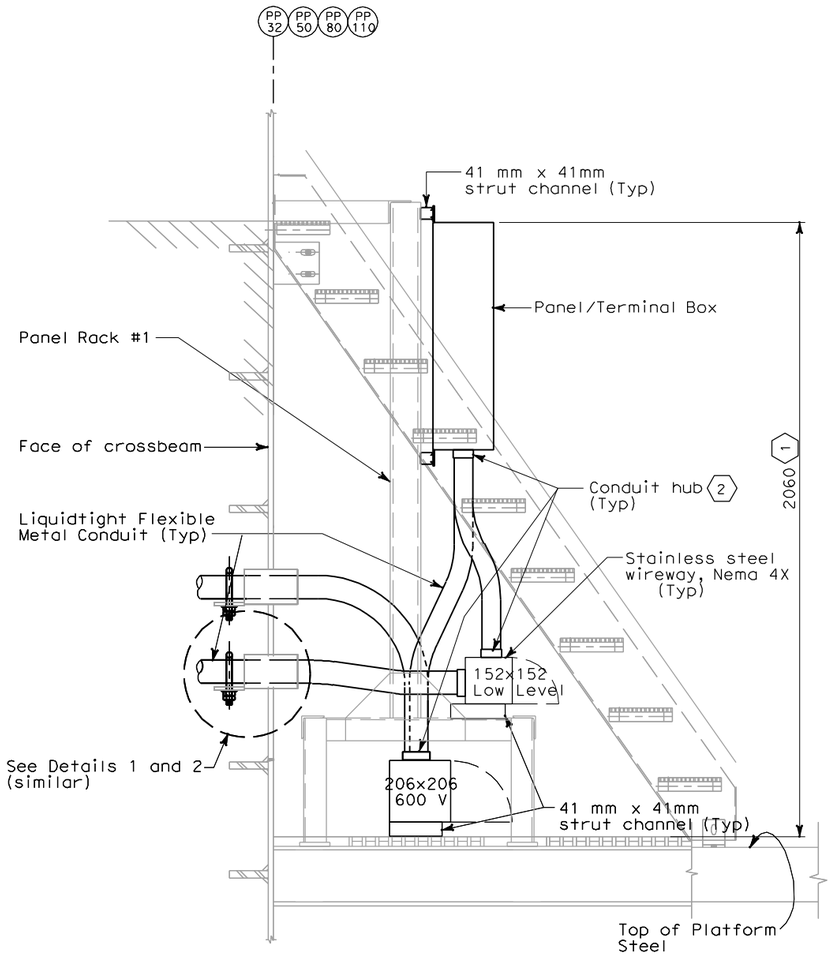

SECTION D-D

SCALE: 1:10

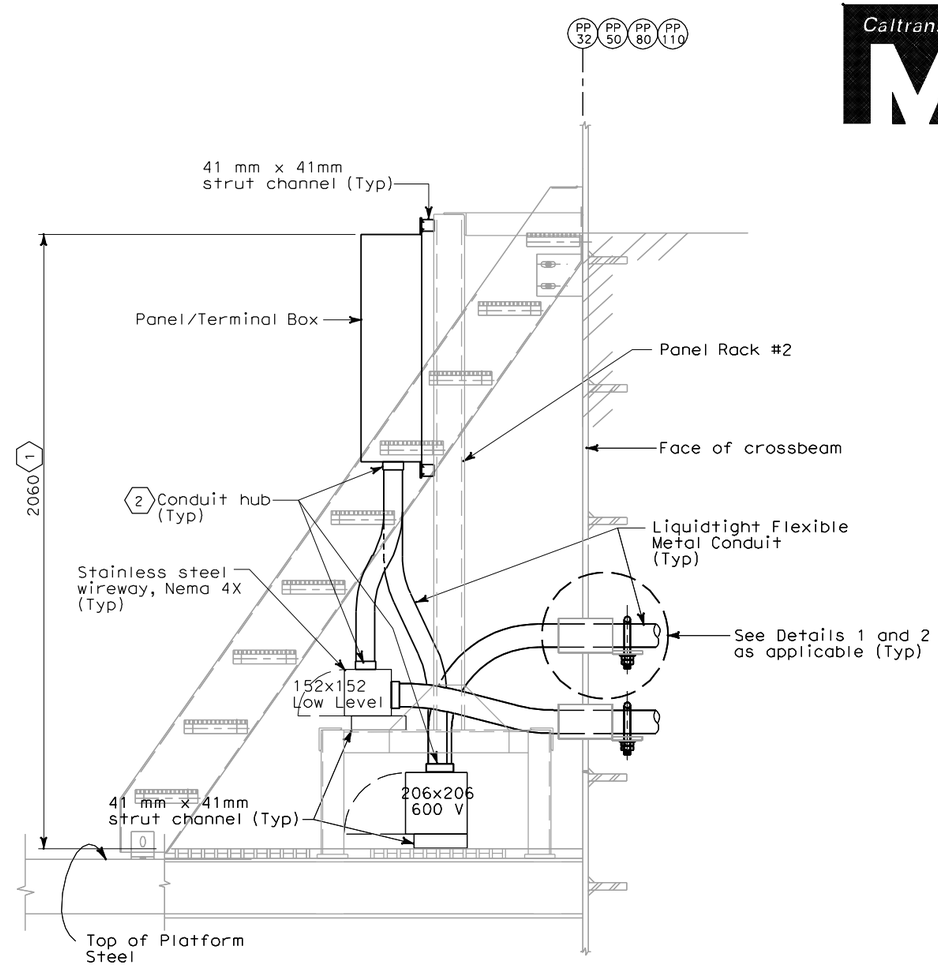

SECTION E-E

SCALE: 1:10

SHEET NOTES:

1. Specified dimension is approximate and may be adjusted to suit field condition.
2. All conduit hubs and fittings shall be watertight and PVC coated when installed outdoor. Conduit hubs shall be provided with insulated ground bushing.

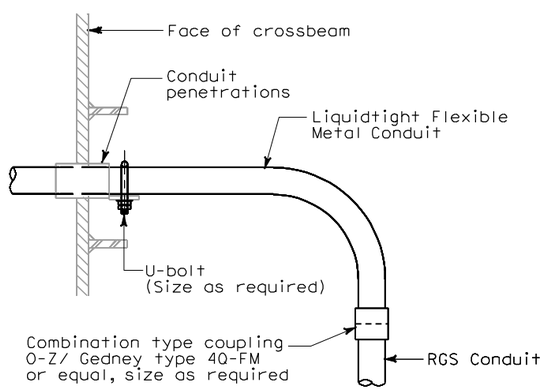

DETAIL 1

NOT TO SCALE

See Section A-A, sheet E-78

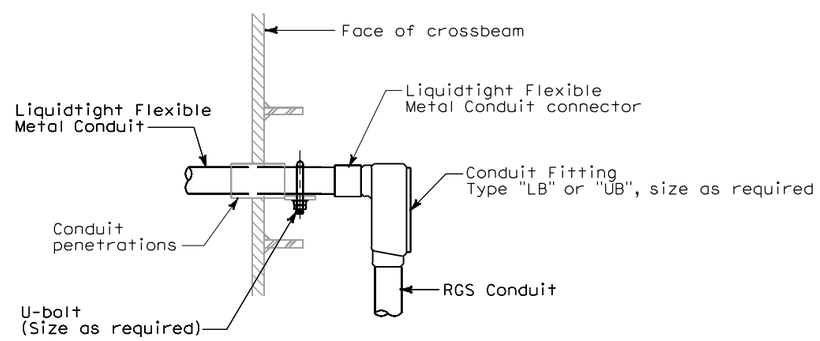

DETAIL 2

NOT TO SCALE

See Section B-B, sheet E-78

REQUEST FOR INFORMATION NOT ADDRESSED IN THIS CCO REMAIN IN FORCE					
0	03/30/09	SERVICE PLATFORM ELECTRICAL CHANGES	RR MP	RC SE	55
MARK	DATE	DESCRIPTIONS	BY	CH'D	CCO#
REVISIONS					

CONTRACT CHANGE ORDER NO._____

SHEET_____ OF _____

DETAILS
SAS SUPERSTRUCTURE ROADWAY WESTBOUND PLATFORMS #5, 6, 7 & 8 SECTIONS

SCALE AS NOTED

ALL DIMENSIONS ARE IN MILLIMETERS UNLESS OTHERWISE SHOWN

E-78E

STATE OF CALIFORNIA - DEPARTMENT OF TRANSPORTATION

Caltrans

DESIGN OVERSIGHT: BEHZAD GOLEMOHAMMADI

CALCULATED/DESIGNED BY | CHECKED BY | DATE | REVISED BY | DATE REVISED

LAST REVISION 00-00-00 | DATE PLOTTED => 4/1/2009 | TIME PLOTTED => 8:56:56 AM

FOR REDUCED PLANS ORIGINAL SCALE IS IN MILLIMETERS 0 20 40 60 80

DGN FILE =>T:\13103\MS\pse\SAS Struc\CCO\SAS CCO55\2009-03-30_Issued for Submittal\04-0120f1_0139S05.dgn
USERNAME =>llorico

CU 04251 | EA 0120F1

DIST	COUNTY	ROUTE	KILOMETER POST TOTAL PROJECT	SHEET No	TOTAL SHEETS
04	SF	80	13.2/13.9	142 R3	1204

Caltrans Metric

REGISTERED ELECTRICAL ENGINEER 12/19/02 DATE

12-6-04
PLANS APPROVAL DATE

REGISTERED PROFESSIONAL ENGINEER JENS ERLINGSSON No. 8249 Exp. 9/30/06 ELECTRICAL STATE OF CALIFORNIA

PB POWER, Inc.
A Parsons Brinckerhoff Company
303 Second St., Suite 700N
San Francisco, CA 94107-1317

The State of California or its officers or agents shall not be responsible for the accuracy or completeness of electronic copies of this plan sheet.

Caltrans now has a web site! To get to the web site, go to http://www.dot.ca.gov

PULL BOXES

Location	Type	Pull Box Size	Enclosure Type	Nameplate Pull Box Cover	Remarks
Roadway Barrier	PB-Com			Low Voltage - Call Box	Caltrans standard ES-9C (PB-9A)
3 Roadway Barrier	PB-Ltg			600 V - Electrical	Caltrans standard ES-9C (PB-9)
Roadway and miscellaneous	PB-1B	304 L x 254 W x 127 D	NEMA 4X	600 V - Electrical	Located at main suspender cable
Roadway and miscellaneous	PB-1C	152 L x 152 W x 102 D	NEMA 4X	600 V - Electrical	Located at suspender brackets
Roadway	PB-1F	304 L x 304 W x 152 D	NEMA 4X	600 V - Electrical	Located at main suspender cable
Inside Girder Box	PB-2A	3 406 L x 254 W x 152 D	NEMA 12	600 V - Electrical	
Service Platform	PB-2B	762 L x 508 W x 203 D	NEMA 4X	600 V - Electrical	
Inside Girder Box	3 PB-2C	915 L x 610 W x 610 D	NEMA 12	600 V - Electrical	Electrical vault-embedded in conc. deck
Inside Girder Box	PB-2P	1067 L x 915 W x 305 D	NEMA 12	600 V - Electrical	Electrical vault-surface/pendant mounted
Inside Girder Box	PB-2L	152 L x 152 W x 102 D	NEMA 12	600 V - Electrical	For future light pipe

PULL BOXES

Location	Type	Pull Box Size	Enclosure Type	Nameplate Pull Box Cover	Remarks
"E" Line Girder access Platform	PB-2D	457 L x 457 W x 203 D	NEMA 4X	600 V - Electrical	For Base Tower power and lighting
Inside Dehumidification #2 Area	PB-2E	203 L x 203 W x 102 D	NEMA 12	600 V - Electrical	For Base Tower Dehumidification #2 power
Tower Base-Elevator Enclosure	PB-2F	203 L x 203 W x 102 D	NEMA 12	600 V - Electrical	For Elevator pit motor power
Tower Walkway Platform, EL. 93.35 m	PB-2G	457 L x 457 W x 203 D	NEMA 4X	600 V - Electrical	For Power and Lighting
Tower Walkway Platform, EL. 93.35 m	PB-2H	457 L x 457 W x 203 D	NEMA 4X	600 V - Electrical	For Power and Lighting
Elevator Enclosure-EL. 93.35 m	PB-2J	203 L x 203 W x 102 D	NEMA 4X	600 V - Electrical	For Power and Lighting
"E" Line Girder access Platform	PB-2K	305 L x 305 W x 152 D	NEMA 4X	600 V - Electrical	For Base Tower power and lighting
Tower Walkway Platform, EL. 53.0 m	PB-2R	203 L x 203 W x 102 D	NEMA 4X	600 V - Electrical	For Power - Booster Pump P1
Tower Vertical Runs	PB-4D	915 L x 610 W x 610 D	NEMA 12	600 V - Electrical	

SPLICE BOXES

Location	Type	Splice Box Size	Enclosure Type	Nameplate Splice Box Cover	Remarks
Inside Girder Box and Tower EL 63.0	PB-3A	1830 L x 915 W x 305 D	NEMA 12	Danger - High Voltage - Keep Out	
Inside Girder Box	PB-3B	813 L x 203 diameter	Cylindrical Housing	Fiber Optic	72 fibers to 12 fibers
Inside Girder Box	PB-3C	813 L x 203 diameter	Cylindrical Housing	Fiber Optic	72 fibers to 72 fibers

PANEL ENCLOSURES (1)

Location	Type	Cabinet/Terminal Box Size	Enclosure Type	Nameplate Cabinet/Terminal Cover	Remarks
Service Platform	PB-6C	See Panel Layout	NEMA 4X	See Panel Layout on E-305	For Navigation Relay Cabinet
			3		
3 Service Platform	PB-7B	See Panel Layout	NEMA 4X	See Panel Layout on E-321	For Scada Communication Terminal Box
Service Platform	PB-7C	3 762 H x 508 W x 203 D	NEMA 4X	Caltrans Telephone	Enclosure only - For Telephone Terminal Box
Inside Girder Box	PB-7D	508 H x 406 W x 203 D	NEMA 4X	Caltrans Telephone	Enclosure only - For Telephone Terminal Box
DELETED					3

SAS SUPERSTRUCTURE WB

Location	Type	Pull Box Size	Enclosure Type	Nameplate Pull Box Cover	Remarks
Inside Light Pole	PB-2N	152 L x 152 W x 102 D	NEMA 12	TOS-MVDS	Cable Termination
Tower Platform	PB-2M	305 L x 305 W x 152 D	NEMA 12	TOS-MVDS	Cable Termination
Inside Dehumidification #1 Area	PB-TOS	203 L x 203 W x 102 D	NEMA 4X	TOS-COM	Dehumidification Unit #1

SHEET NOTE:

(1) Panel enclosures shall be provided with padlock provisions.

REQUEST FOR INFORMATION NOT ADDRESSED IN THIS CCO REMAIN IN FORCE					
3	03/30/09	SERVICE PLATFORM ELECTRICAL CHANGES	RR	RG FW	55
2	09/24/08	CABLE ELECTRICAL	RY AG	RG FW	72
1	02/19/08	ELECTRICAL MODIFICATIONS	MP EL	RR	42
MARK	DATE	DESCRIPTIONS	BY	CH'D	CCO#
REVISIONS					

CONTRACT CHANGE ORDER NO._____
SHEET _____ OF _____

REGISTERED PROFESSIONAL ENGINEER MARNELL FUMIO TAKATA No. E 8651 Exp. 9/30/2008 ELECTRICAL STATE OF CALIFORNIA

FOR REVISION ONLY 1

REGISTERED PROFESSIONAL ENGINEER FADI WALIEDDINE No. 11465 Exp. 12/31/2009 ELECTRICAL STATE OF CALIFORNIA

FOR REVISION ONLY 2 3

DETAILS
SAS SUPERSTRUCTURE ROADWAY WESTBOUND PULLBOX SCHEDULES

E-83

DESIGN OVERSIGHT
BEHZAD GOLEMOHAMMADI

CALCULATED/DESIGNED BY	FK	DATE 10/01	REVISED BY	DATE REVISED
CHECKED BY	BL	11/01		

STATE OF CALIFORNIA - DEPARTMENT OF TRANSPORTATION
Caltrans

LAST REVISION 00-00-00
DATE PLOTTED => 3/31/2009
TIME PLOTTED => 2:51:14 PM

FOR REDUCED PLANS ORIGINAL SCALE IS IN MILLIMETERS 0 20 40 60 80

DGN FILE =>T:\13103\MS\pse\SAS Struc\CCO\SAS CC055\04-0120f1_0142R03.dgn
USERNAME =>garciar

CU 04251 EA 0120F1

DIST	COUNTY	ROUTE	KILOMETER POST TOTAL PROJECT	SHEET No	TOTAL SHEETS
04	SF	80	13.2/13.9	166 R1	1204

12/19/02
REGISTERED ELECTRICAL ENGINEER

12-6-04
PLANS APPROVAL DATE

REGISTERED PROFESSIONAL ENGINEER JENS ERLINGSSON No. 8249 Exp. 9/30/06 ELECTRICAL STATE OF CALIFORNIA

PB POWER, Inc.
A Parsons Brinckerhoff Company
303 Second St., Suite 700N
San Francisco, CA 94107-1317

The State of California or its officers or agents shall not be responsible for the accuracy or completeness of electronic copies of this plan sheet.

Caltrans now has a web site! To get to the web site, go to http://www.dot.ca.gov

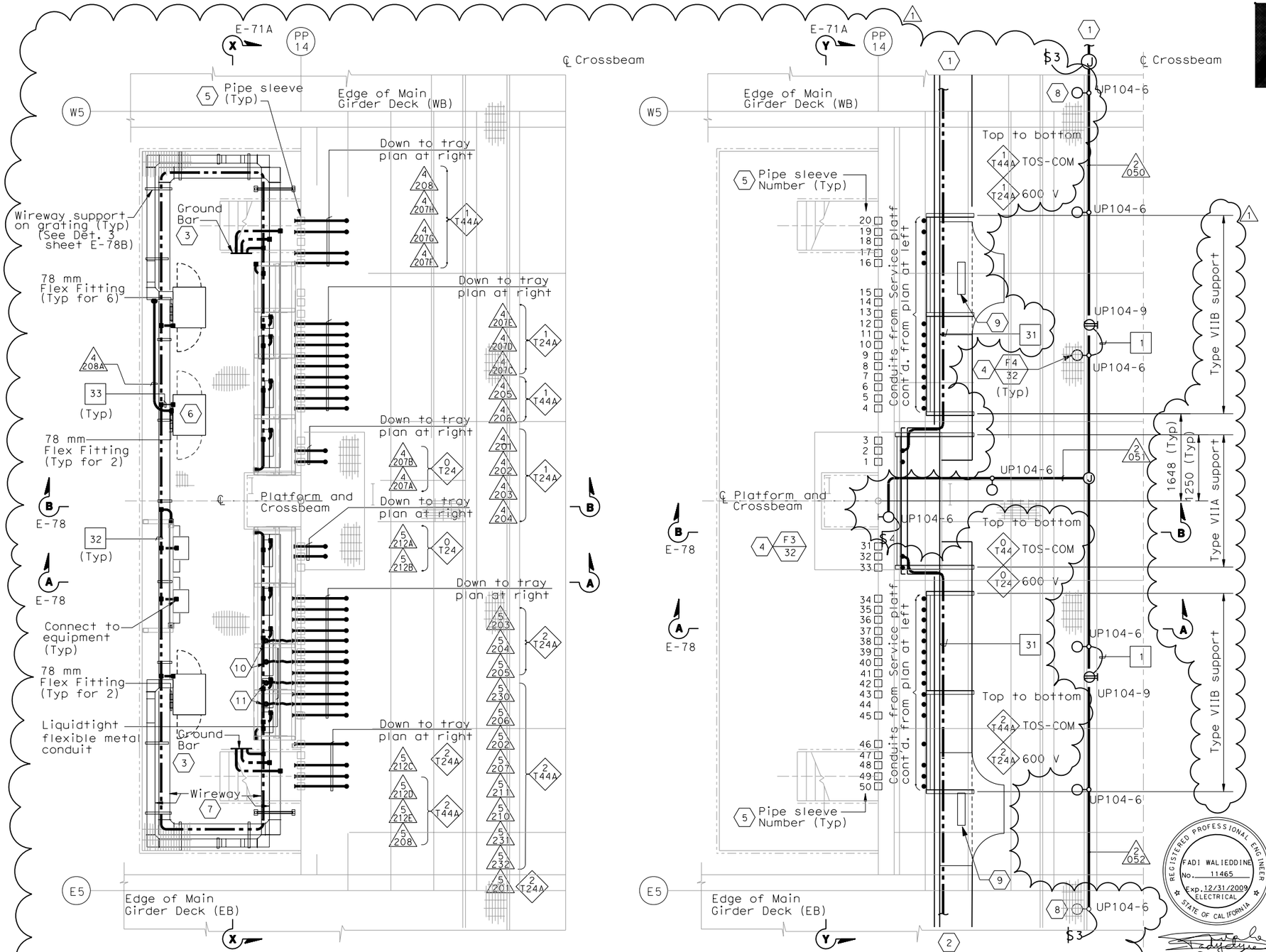

WIREWAY AND CONDUIT PLAN AT SERVICE PLATFORM

SCALE 1:40

CABLE TRAY AND CONDUIT PLAN INSIDE CROSSBEAM

SCALE 1:40

SHEET NOTES:

1. For continuation inside WB girder, see sheets E-96 and E-114A.
2. For continuation inside EB girder, see sheet E-181 and E-114A.
3. For typical ground bar installation, see Detail 5 sheet E-78.
4. For typical lighting fixture installation see Details 2 and 3, sheet E-123.
5. Pipe sleeve without conduit going through is spare. Contractor to provide plug or cap at both ends. For location see Section Y-Y on sheet E-71A.
6. TOS-4WB for the temporary mobile CMS. Control cabinet shall remain for future use. U.O.N.
7. For wireway numbers, see sheet E-71.
8. Locate light fixture approximate half way between girder wall and girder walkway.
9. Fiber splice tray, see sheet E-355.
10. Terminate conduits at Terminal Box #TEL-4.
11. Terminate conduits at Terminal Box #COM-4.

NOTES:

1. Reference:
   - For circuit, conduit/cable tray schedules, see sheets starting at E-401.
2. For wireway support details, see AS sheets.
3. For location of pipe sleeves at the utility platform crossbeams, see Typical Crossbeam Details sheets.
4. For platform elevations, see sheet E-71A.

REGISTERED PROFESSIONAL ENGINEER FADI WALIEDDINE No. 11465 Exp. 12/31/2009 ELECTRICAL STATE OF CALIFORNIA

FOR REVISION ONLY

REQUEST FOR INFORMATION NOT ADDRESSED IN THIS CCO REMAIN IN FORCE

MARK	DATE	DESCRIPTIONS	BY	CH'D	CCO#
1	03/30/09	SERVICE PLATFORM ELECTRICAL CHANGES	RR MP	RG FW	55

REVISIONS

CONTRACT CHANGE ORDER NO._____
SHEET ____ OF ____

DETAILS

SAS SUPERSTRUCTURE GIRDER WESTBOUND PLATFORM 4 CONDUIT, LIGHTING AND GROUNDING PLAN

SCALE AS NOTED

E-114

STATE OF CALIFORNIA - DEPARTMENT OF TRANSPORTATION	DESIGN OVERSIGHT
Caltrans	BEHZAD GOLEMOHAMMADI

CALCULATED/DESIGNED BY	FK	DATE 11/02	REVISED BY	DATE	REVISED
CHECKED BY	IAH	11/02			

THIS PLAN IS ACCURATE FOR ELECTRICAL WORK ONLY.

ALL DIMENSIONS ARE IN MILLIMETERS UNLESS OTHERWISE SHOWN.

FOR REDUCED PLANS ORIGINAL SCALE IS IN MILLIMETERS 0 20 40 60 80

DGN FILE =X:\13103\MS\pse\SAS Struc\CCO\SAS CCO55\04-0120f1_0166R01.dgn
USERNAME =\garciar

CU 04251 EA 0120F1

LAST REVISION 00-00-00
DATE PLOTTED =>3/31/2009
TIME PLOTTED =>3:12:29 PM

DIST	COUNTY	ROUTE	KILOMETER POST TOTAL PROJECT	SHEET No	TOTAL SHEETS
04	SF	80	13.2/13.9	166 S1	1204

REGISTERED ELECTRICAL ENGINEER 6/12/08 DATE

PLANS APPROVAL DATE

REGISTERED PROFESSIONAL ENGINEER FADI WALIEDDINE No. 11465 Exp. 12/31/2009 ELECTRICAL STATE OF CALIFORNIA

PB AMERICAS, Inc.
A Parsons Brinckerhoff Company
303 Second St., Suite 700N
San Francisco, CA 94107-1317

The State of California or its officers or agents shall not be responsible for the accuracy or completeness of electronic copies of this plan sheet.

Caltrans now has a web site! To get to the web site, go to http://www.dot.ca.gov

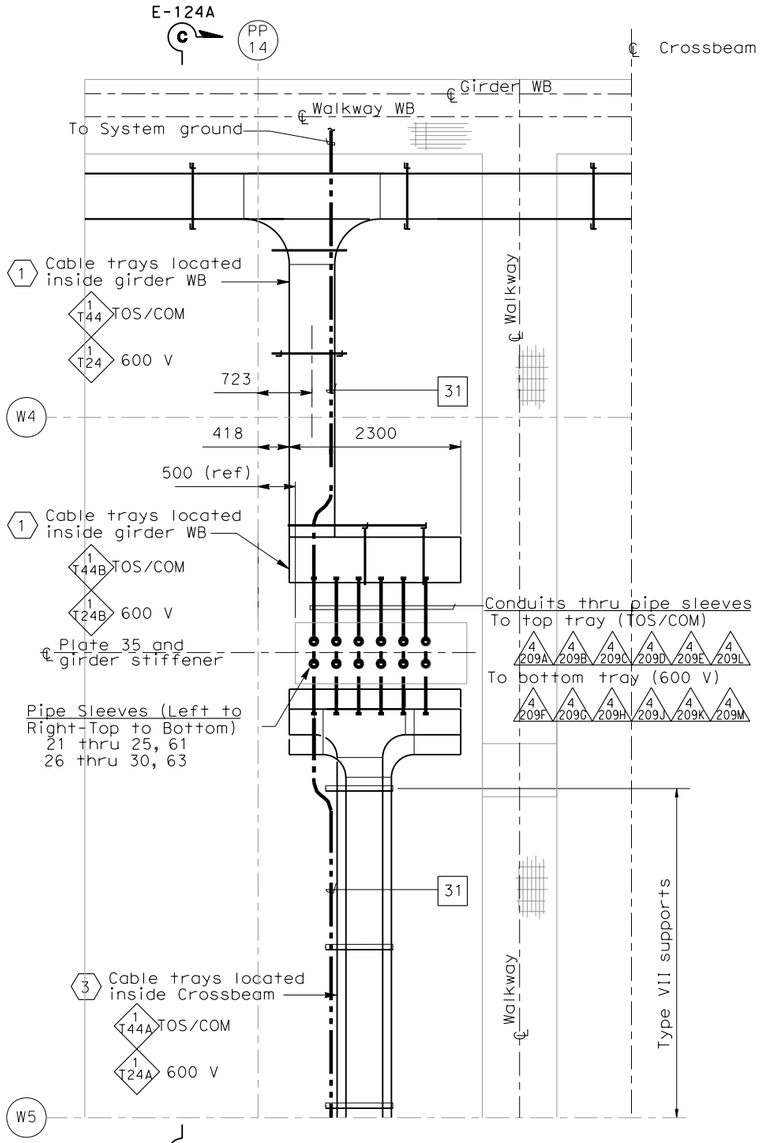

CABLE TRAY PLAN - DETAIL 4

SCALE 1:40

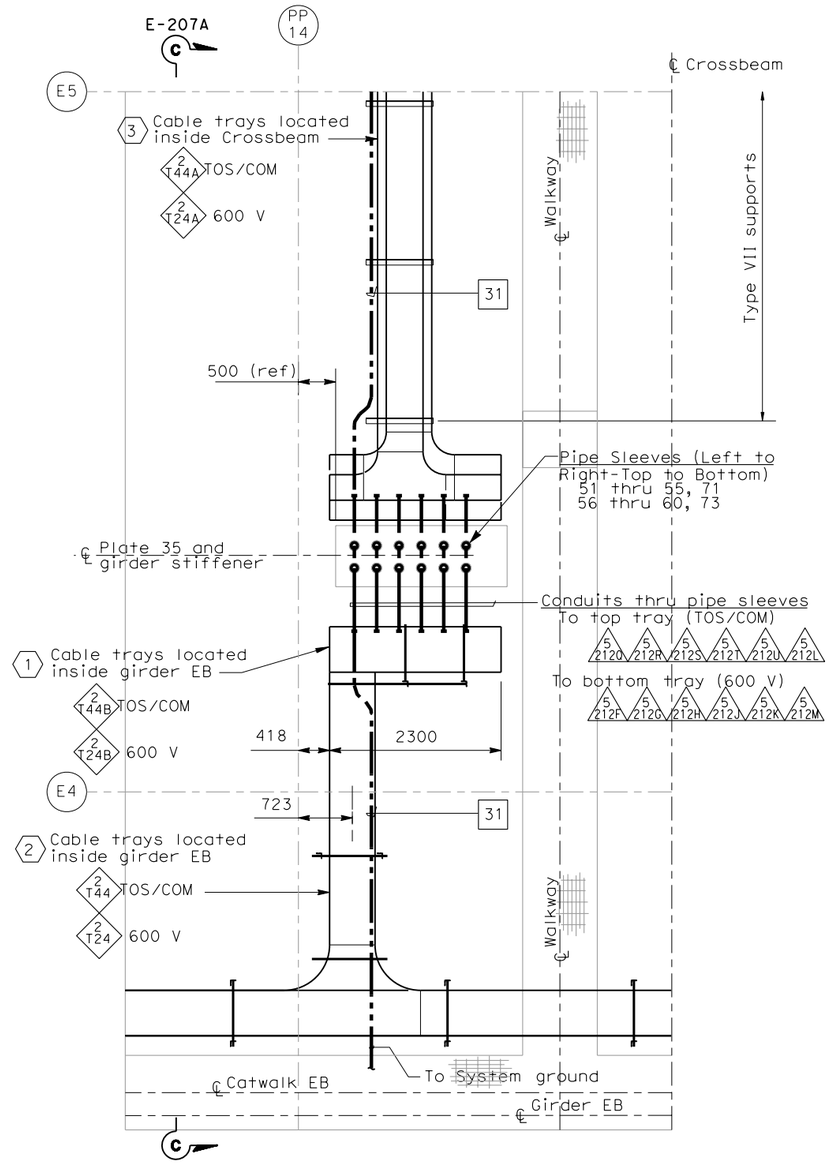

CABLE TRAY PLAN - DETAIL 5

SCALE 1:40

NOTES:

1. Reference:
   - For circuit, conduit/cable tray schedules, see sheets starting at E-401.
2. For location of pipe sleeves at the Crossbeam/Service platform, see Typical crossbeam details sheets.
3. For cable tray support details, see AS sheets.
4. (SP) Denotes spare pipe sleeve for 103 mm. Contractor to provide plug at each ends.

SHEET NOTES:

(1) For continuation inside WB girder, -at Crossbeam #4, see sheet E-96.

(2) For continuation inside EB girder, -at Crossbeam #4, see sheet E-181.

(3) For continuation inside Crossbeam,

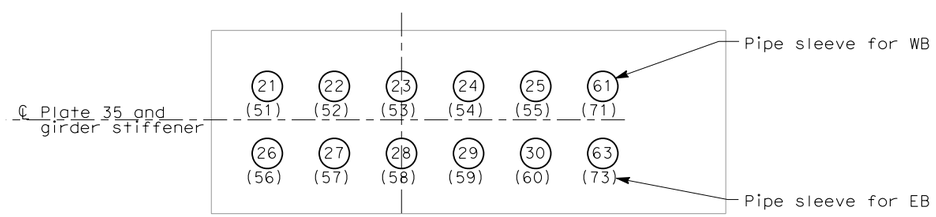

PIPE SLEEVE LOCATION

NO SCALE

REQUEST FOR INFORMATION NOT ADDRESSED IN THIS CCO REMAIN IN FORCE					
0	03/30/09	SERVICE PLATFORM ELECTRICAL CHANGES	RR MP	RG FW	55
MARK	DATE	DESCRIPTIONS	BY	CH'D	CCO#
REVISIONS					

CONTRACT CHANGE ORDER NO._____
SHEET _____ OF _____

DETAILS
SAS SUPERSTRUCTURE GIRDER WESTBOUND CONDUIT, GROUNDING AND CABLE TRAY PLAN

SCALE AS NOTED

THIS PLAN IS ACCURATE FOR ELECTRICAL WORK ONLY.

ALL DIMENSIONS ARE IN MILLIMETERS UNLESS OTHERWISE SHOWN

E-114A

DATE	BY	CALCULATED/DESIGNED BY	CHECKED BY	REVISED BY	DATE REVISED
7/01	JP	BL			12/01

DESIGN OVERSIGHT BEHZAD GOLEMOHAMMADI

STATE OF CALIFORNIA - DEPARTMENT OF TRANSPORTATION

Caltrans

LAST REVISION 00-00-00 DATE PLOTTED => 3/31/2009 TIME PLOTTED => 3:13:05 PM

DIST	COUNTY	ROUTE	KILOMETER POST TOTAL PROJECT	SHEET No	TOTAL SHEETS
04	SF	80	13.2/13.9	166 S2	1204

REGISTERED ELECTRICAL ENGINEER 6/12/08 DATE

PLANS APPROVAL DATE

REGISTERED PROFESSIONAL ENGINEER FADI WALIEDDINE No. 11465 Exp. 12/31/2009 ELECTRICAL STATE OF CALIFORNIA

PB AMERICAS, Inc.
A Parsons Brinckerhoff Company
303 Second St., Suite 700N
San Francisco, CA 94107-1317

The State of California or its officers or agents shall not be responsible for the accuracy or completeness of electronic copies of this plan sheet.

Caltrans now has a web site! To get to the web site, go to http://www.dot.ca.gov

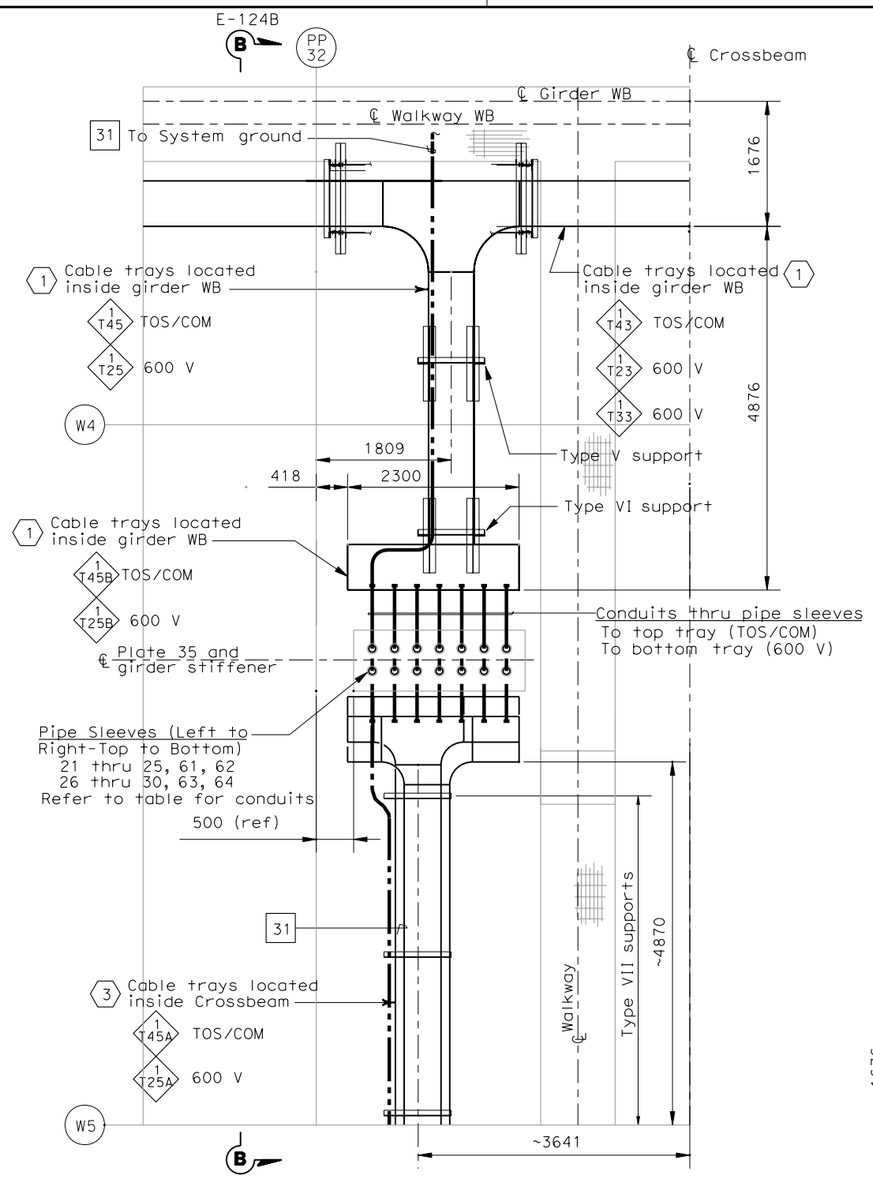

CABLE TRAY PLAN - DETAIL 4

(TYPICAL FOR PP 32, PP 50, PP 80 AND PP 110)
SCALE 1:40

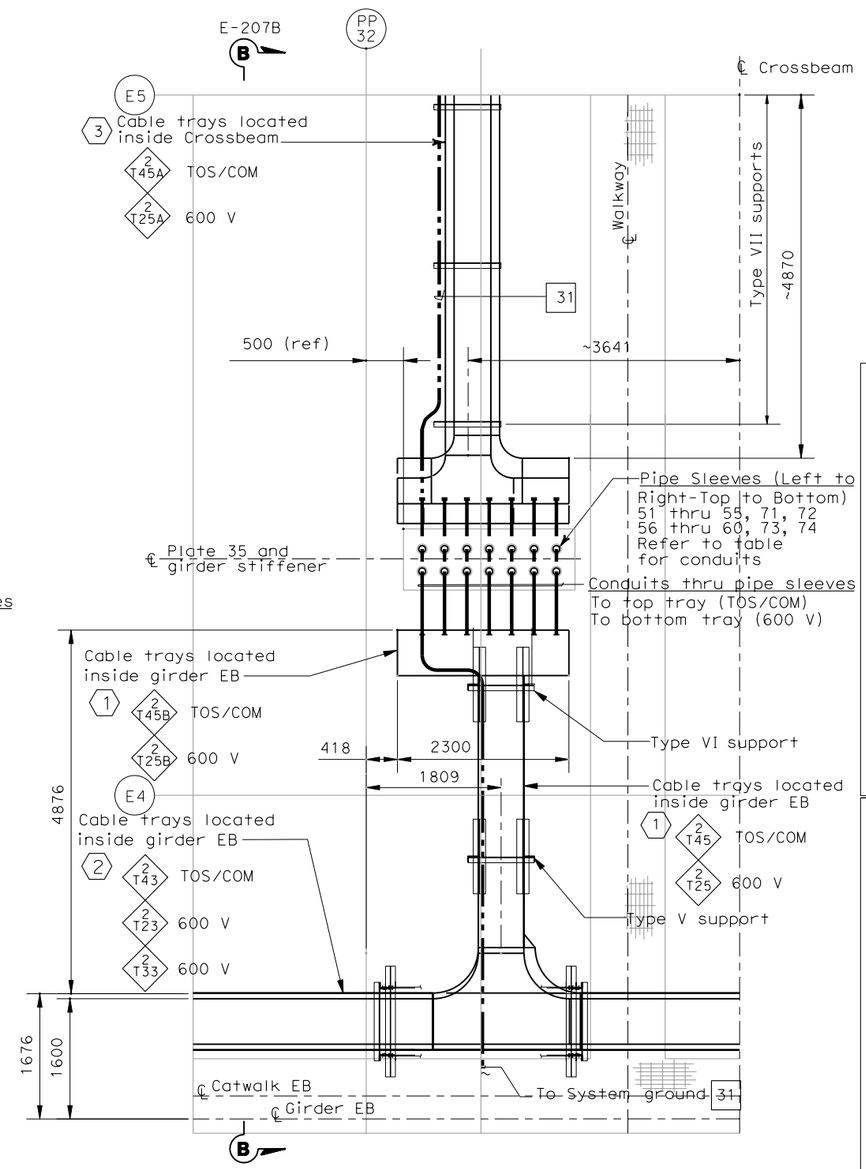

CABLE TRAY PLAN - DETAIL 5

(TYPICAL FOR PP 32, PP 50, PP 80 AND PP 110)
SCALE 1:40

			CONDUIT NUMBER/PIPE SLEEVE	TRAY NO. FROM	TRAY NO. TO
WESTBOUND	CROSSBEAM AT PP-32	TOP	4 211A 21, 4 211B 22, 4 211C 23, 4 211D 24, 4 211E 25, 4 211L 61, 4 211M 62	1 T45A	T45B
		BOTTOM	4 211F 26, 4 211G 27, 4 211H 28, 4 211J 29, 4 211K 30, 4 211N 63, 4 211P 64	1 T25A	1 T25B
	CROSSBEAM AT PP-50	TOP	4 213A 21, 4 213B 22, 4 213C 23, 4 213D 24, 4 213E 26, 4 213L 61, 4 213M 62	1 T46A	1 T46B
		BOTTOM	4 213F 26, 4 213G 27, 4 213H 28, 4 213J 29, 4 213K 30, 4 213N 63, 4 213P 64	1 T26A	1 T26B
	CROSSBEAM AT PP-80	TOP	4 215A 21, 4 215B 22, 4 215C 23, 4 215D 24, 4 215E 27, 4 215L 61, 4 215M 62	1 T47A	1 T47B
		BOTTOM	4 215F 27, 4 215G 27, 4 215H 28, 4 215J 29, 4 215K 30, 4 215N 63, 4 215P 64	1 T27A	1 T27B
	CROSSBEAM AT PP-110	TOP	4 217A 21, 4 217B 22, 4 217C 23, 4 217D 24, 4 28, 4 217L 61, 4 217M 62	1 T48A	1 T48B
		BOTTOM	4 217F 28, 4 217G 28, 4 217H 28, 4 217J 29, 4 217K 30, 4 217N 63, 4 217P 64	1 T28A	1 T28B
EASTBOUND	CROSSBEAM AT PP-32	TOP	5 215A 51, 5 215B 52, 5 215C 53, 5 215D 54, 5 215E 55, 5 215L 71, 5 215M 72	2 T45A	2 T45B
		BOTTOM	5 215F 56, 5 215G 57, 5 215H 58, 5 215J 59, 5 215K 60, 5 215N 73, 5 215P 74	2 T25A	2 T25B
	CROSSBEAM AT PP-50	TOP	5 217A 51, 5 217B 52, 5 217C 53, 5 217D 54, 5 217E 55, 5 217L 71, 5 217M 72	2 T46A	2 T46B
		BOTTOM	5 217F 56, 5 217G 57, 5 217H 58, 5 217J 59, 5 217K 60, 5 217N 73, 5 217P 74	2 T26A	2 T26B
	CROSSBEAM AT PP-80	TOP	5 219A 51, 5 219B 52, 5 219C 53, 5 219D 54, 5 219E 55, 5 219L 71, 5 219M 72	2 T47A	2 T47B
		BOTTOM	5 219F 56, 5 219G 57, 5 219H 58, 5 219J 59, 5 219K 60, 5 219N 73, 5 219P 74	2 T27A	2 T27B
	CROSSBEAM AT PP-110	TOP	5 300A 51, 5 300B 52, 5 300C 53, 5 300D 54, 5 300E 55, 5 300L 71, 5 300M 72	2 T48A	2 T48B
		BOTTOM	5 300F 56, 5 300G 57, 5 300H 58, 5 300J 59, 5 300K 60, 5 300N 73, 5 300P 74	2 T28A	2 T28B

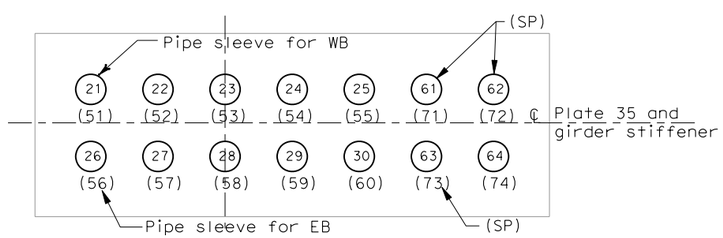

PIPE SLEEVE LOCATION

NO SCALE

NOTES:

1. Reference:
   - For circuit, conduit/cable tray schedules, see sheets starting at E-401.
2. For location of pipe sleeves at the Crossbeam/Service platform, see Typical crossbeam details sheets.
3. For cable tray support details, see AS sheets.
4. (SP) Denotes spare pipe sleeve with conduit. Contractor to provide plug at each ends.

SHEET NOTES:

1. For continuation inside WB girder, -at Crossbeam #4, see sheet E-96.
2. For continuation inside EB girder, -at Crossbeam #4, see sheet E-181.
3. For continuation inside Crossbeam,

REQUEST FOR INFORMATION NOT ADDRESSED IN THIS CCO REMAIN IN FORCE

MARK	DATE	DESCRIPTIONS	BY	CH'D	CCO#
0	03/30/09	SERVICE PLATFORM ELECTRICAL CHANGES	RR MP	RG FW	55

REVISIONS

CONTRACT CHANGE ORDER NO._____
SHEET _____ OF _____

DETAILS
SAS SUPERSTRUCTURE GIRDER WESTBOUND CONDUIT, GROUNDING AND CABLE TRAY PLAN

SCALE AS NOTED

E-114B

STATE OF CALIFORNIA - DEPARTMENT OF TRANSPORTATION
Caltrans

DESIGN OVERSIGHT
BEHZAD GOLEMOHAMMADI

CALCULATED/DESIGNED BY | CHECKED BY | DATE | REVISED BY | DATE REVISED

THIS PLAN IS ACCURATE FOR ELECTRICAL WORK ONLY.

ALL DIMENSIONS ARE IN MILLIMETERS UNLESS OTHERWISE SHOWN.

FOR REDUCED PLANS ORIGINAL SCALE IS IN MILLIMETERS 0 20 40 60 80

DGN FILE =>T:\13103\MS\pse\SAS Struc\CCO\SAS CC055\04-0120f1_0166S02.dgn
USERNAME =>garciar

CU 04251 | EA 0120F1

LAST REVISION 00-00-00 | DATE PLOTTED => 3/31/2009 TIME PLOTTED => 3:13:41 PM

DIST	COUNTY	ROUTE	KILOMETER POST TOTAL PROJECT	SHEET No	TOTAL SHEETS
04	SF	80	13.2/13.9	167 R1	1204

12/19/02
REGISTERED ELECTRICAL ENGINEER DATE

12-6-04
PLANS APPROVAL DATE

REGISTERED PROFESSIONAL ENGINEER
JENS ERLINGSSON
No. 8249
Exp. 9/30/06
ELECTRICAL
STATE OF CALIFORNIA

PB POWER, Inc.
A Parsons Brinckerhoff Company
303 Second St., Suite 700N
San Francisco, CA 94107-1317

The State of California or its officers or agents shall not be responsible for the accuracy or completeness of electronic copies of this plan sheet.

Caltrans now has a web site! To get to the web site, go to http://www.dot.ca.gov

Caltrans Metric

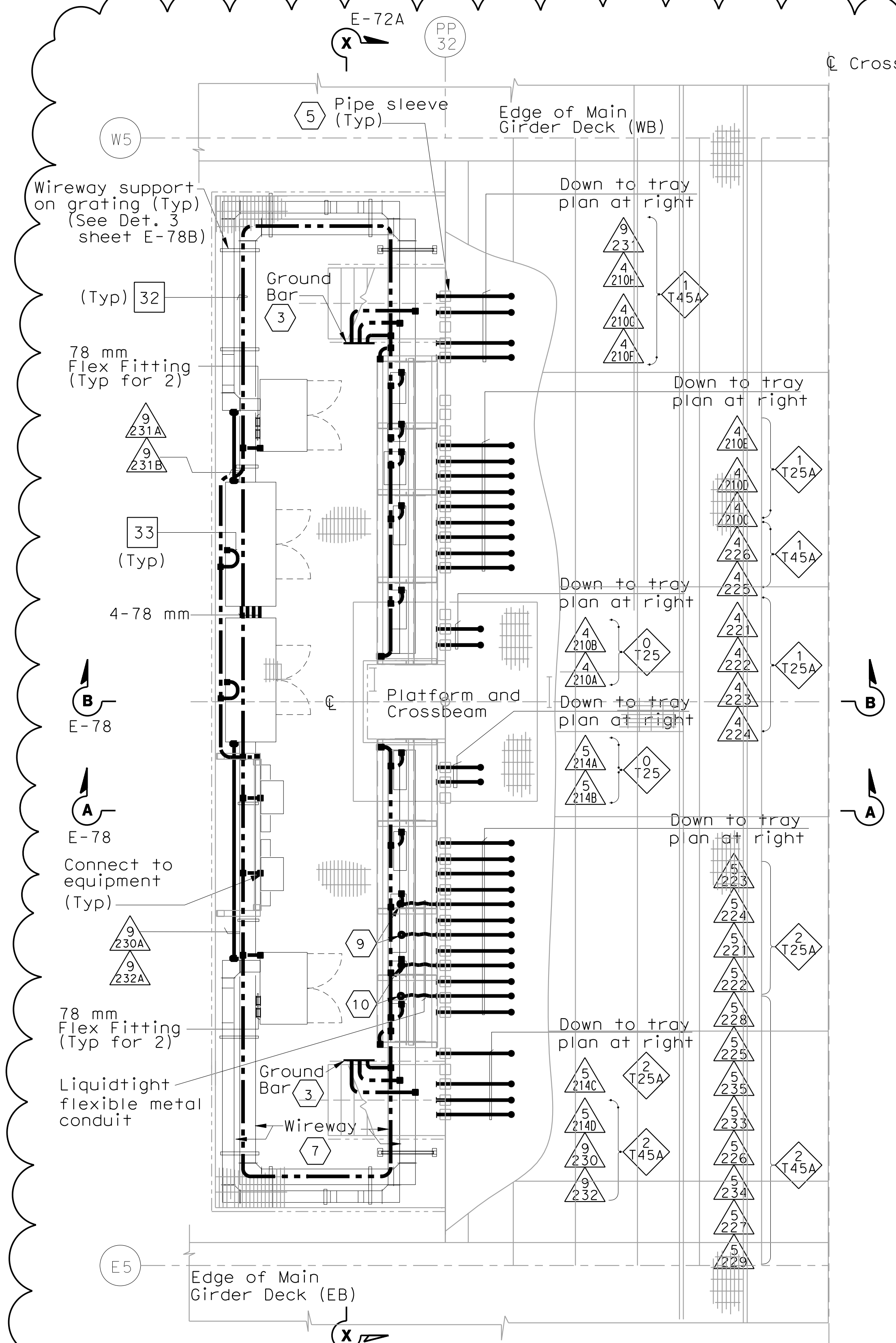

WIREWAY AND CONDUIT PLAN
AT SERVICE PLATFORM
SCALE 1:40

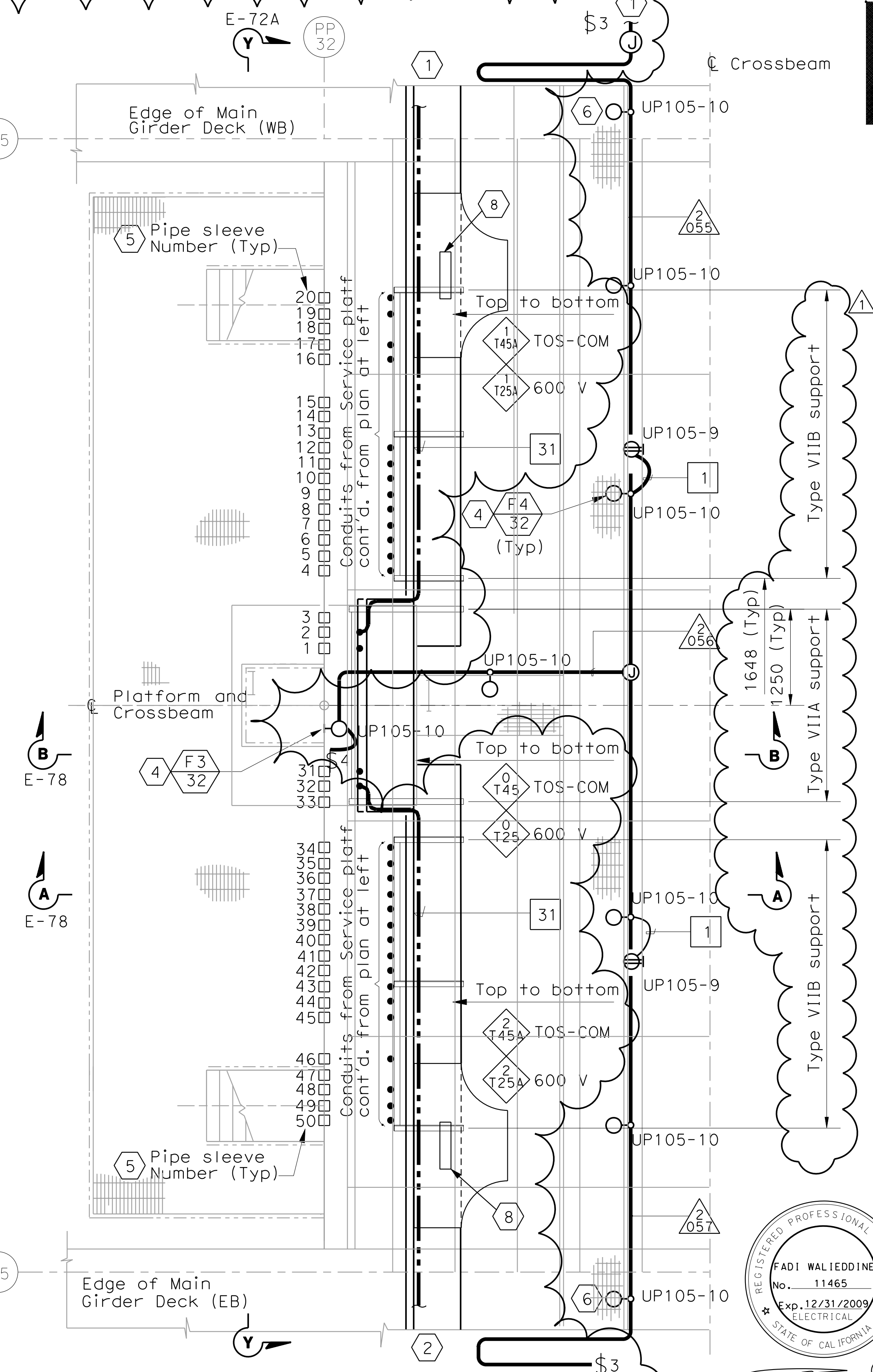

CABLE TRAY AND CONDUIT PLAN △1
INSIDE CROSSBEAM
SCALE 1:40

SHEET NOTES:

1. For continuation inside WB girder, see sheets E-97 and E-114B.
2. For continuation inside EB girder, see sheet E-182 and E-114B.
3. For typical ground bar installation, see Detail 5 sheet E-78.
4. For typical lighting fixture installation see Details 2 and 3, sheet E-123. △1
5. Pipe sleeve without conduit going through is spare. Contractor to provide plug or cap at both ends. For location see Section Y-Y on sheet E-72A.
6. Locate light fixture approximate half way between girder wall and girder walkway.
7. For wireway numbers, see sheet E-72.
8. Fiber Optic splice closure, see Typical Fiber Optic Tray Detail Sheet E-355.
9. Terminate conduits at Terminal Box #TEL-5.
10. Terminate conduits at Terminal Box #COM-5.

NOTES:

1. Reference:
   - For circuit, conduit/cable tray schedules, see sheets starting at E-401.
2. For wireway support details, see AS sheets.
3. △1 For location of pipe sleeves at the utility platform crossbeams, see Typical Crossbeam Details sheets.
4. For platform elevations, see sheet E-72A.

REGISTERED PROFESSIONAL ENGINEER
FADI WALIEDDINE
No. 11465
Exp. 12/31/2009
ELECTRICAL
STATE OF CALIFORNIA

FOR REVISION ONLY
△1

REQUEST FOR INFORMATION NOT ADDRESSED IN THIS CCO REMAIN IN FORCE

MARK	DATE	DESCRIPTIONS	BY	CH'D	CCO#
△1	03/30/09	SERVICE PLATFORM ELECTRICAL CHANGES	RR MP	RG FW	55

REVISIONS

CONTRACT CHANGE ORDER NO.______
SHEET ____ OF ____

DETAILS

SAS SUPERSTRUCTURE GIRDER WESTBOUND PLATFORM 5 CONDUIT, LIGHTING, AND GROUNDING PLAN

SCALE AS NOTED

E-115

STATE OF CALIFORNIA - DEPARTMENT OF TRANSPORTATION
Caltrans

DESIGN OVERSIGHT	BEHZAD GOLEMOHAMMADI

CALCULATED/DESIGNED BY	JP	DATE 7/01	REVISED BY
CHECKED BY	BL	12/01	DATE REVISED

THIS PLAN IS ACCURATE FOR ELECTRICAL WORK ONLY.

ALL DIMENSIONS ARE IN MILLIMETERS UNLESS OTHERWISE SHOWN.

FOR REDUCED PLANS ORIGINAL SCALE IS IN MILLIMETERS
0 20 40 60 80

DGN FILE =>T:\13103\MS\pse\SAS Struc\CCO\SAS CC055\04-0120f1_0167R01.dgn
USERNAME =>garciar

CU 04251
EA 0120F1

LAST REVISION 00-00-00
DATE PLOTTED => 3/31/2009
TIME PLOTTED => 3:14:16 PM

DIST	COUNTY	ROUTE	KILOMETER POST TOTAL PROJECT	SHEET No	TOTAL SHEETS
04	SF	80	13.2/13.9	168 R1	1204

12/19/02
REGISTERED ELECTRICAL ENGINEER DATE

12-6-04
PLANS APPROVAL DATE

REGISTERED PROFESSIONAL ENGINEER JENS ERLINGSSON No. 8249 Exp. 9/30/06 ELECTRICAL STATE OF CALIFORNIA

PB POWER, Inc.
A Parsons Brinckerhoff Company
303 Second St., Suite 700N
San Francisco, CA 94107-1317

The State of California or its officers or agents shall not be responsible for the accuracy or completeness of electronic copies of this plan sheet.

Caltrans now has a web site! To get to the web site, go to http://www.dot.ca.gov

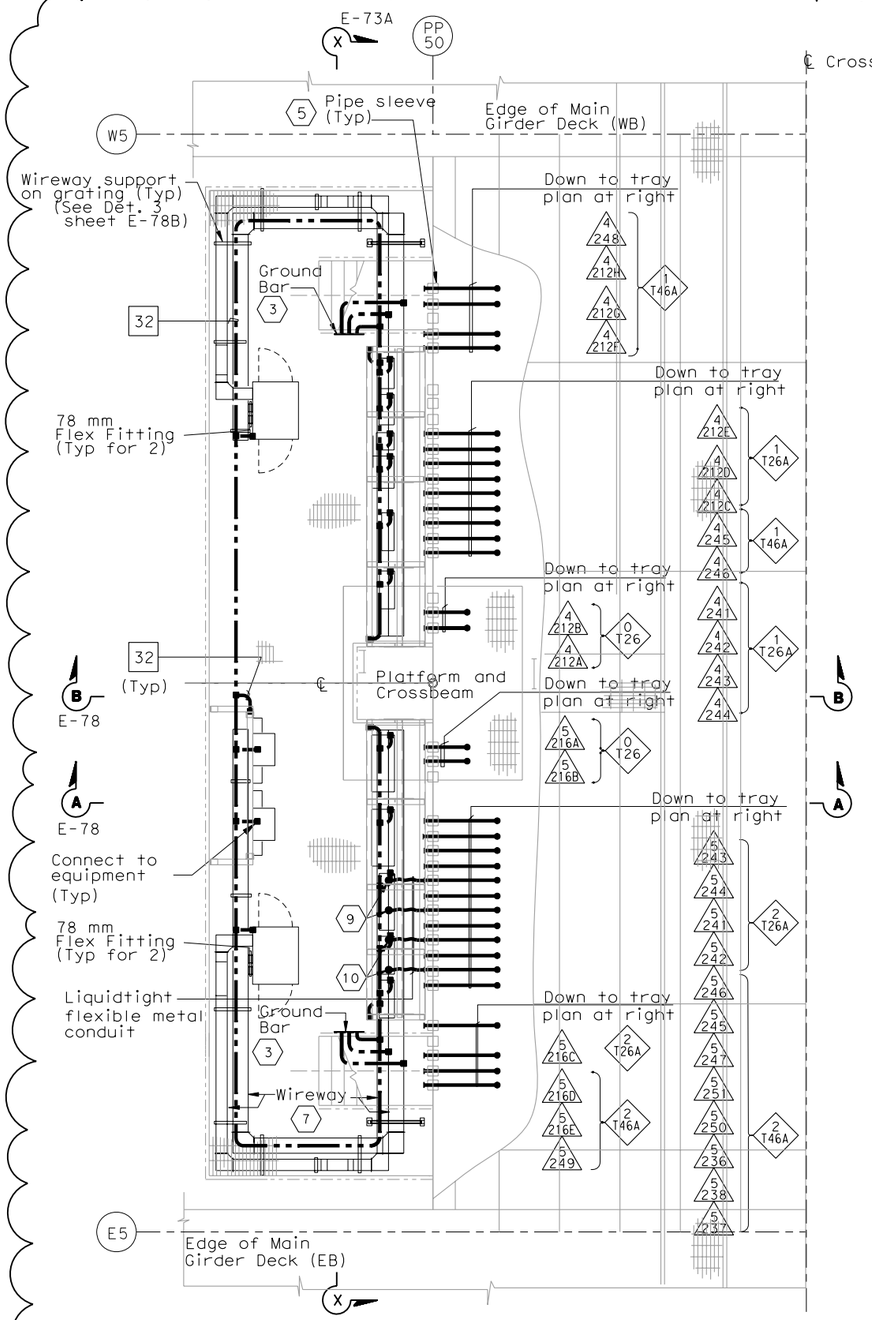

WIREWAY AND CONDUIT PLAN AT SERVICE PLATFORM

SCALE 1:40

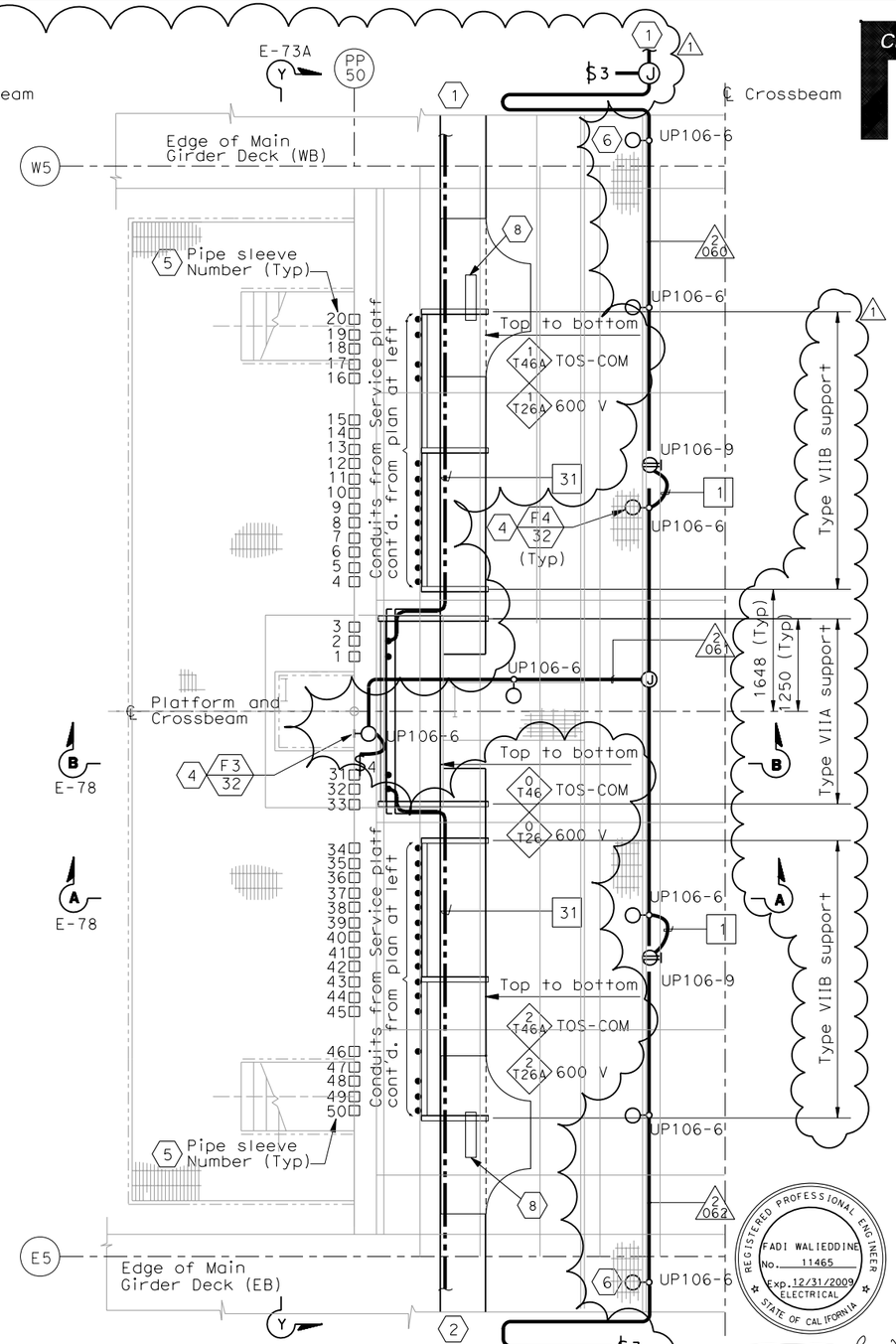

CABLE TRAY AND CONDUIT PLAN INSIDE CROSSBEAM

SCALE 1:40

SHEET NOTES:

1. For continuation inside WB girder, see sheets E-98 and E-114B.
2. For continuation inside EB girder, see sheet E-183 and E-114B.
3. For typical ground bar installation, see Detail 5 sheet E-78.
4. For typical lighting fixture installation see Details 2 and 3, sheet E-123.
5. Pipe sleeve without conduit going through is spare. Contractor to provide plug or cap at both ends. For location see Section Y-Y on sheet E-73A.
6. Locate light fixture approximate half way between girder wall and girder walkway.
7. For wireway numbers, see sheet E-73.
8. Fiber Optic splice closure, see Typical Fiber Optic Tray Detail Sheet E-355.
9. Terminate conduits at Terminal Box #TEL-6.
10. Terminate conduits at Terminal Box #COM-6.

NOTES:

1. Reference:
   - For circuit, conduit/cable tray schedules, see sheets starting at E-401.
2. For wireway support details, see AS sheets.
3. For location of pipe sleeves at the utility platform crossbeams, see Typical Crossbeam Details sheets.
4. For platform elevations, see sheet E-73A.

REGISTERED PROFESSIONAL ENGINEER FADI WALIEDDINE No. 11465 Exp. 12/31/2009 ELECTRICAL STATE OF CALIFORNIA

FOR REVISION ONLY

REQUEST FOR INFORMATION NOT ADDRESSED IN THIS CCO REMAIN IN FORCE					
1	03/30/09	SERVICE PLATFORM ELECTRICAL CHANGES	RR MP	RG FW	55
MARK	DATE	DESCRIPTIONS	BY	CH'D	CCO#
		REVISIONS			

CONTRACT CHANGE ORDER NO. _____
SHEET ____ OF ____

DETAILS
SAS SUPERSTRUCTURE GIRDER WESTBOUND PLATFORM 6 CONDUIT, LIGHTING, AND GROUNDING PLAN

SCALE AS NOTED

E-116

CALCULATED/ DESIGNED BY	JP	DATE 08/01	REVISED BY
CHECKED BY	BL	11/01	DATE REVISED

DESIGN OVERSIGHT
BEHZAD GOLEMOHAMMADI

STATE OF CALIFORNIA - DEPARTMENT OF TRANSPORTATION
Caltrans

THIS PLAN IS ACCURATE FOR ELECTRICAL WORK ONLY.

ALL DIMENSIONS ARE IN MILLIMETERS UNLESS OTHERWISE SHOWN.

FOR REDUCED PLANS ORIGINAL SCALE IS IN MILLIMETERS 0 20 40 60 80

DGN FILE =>T:\13103\MS\pse\SAS Struc\CCO\SAS CC055\04-0120f1_0168R01.dgn
USERNAME =>garciar

CU 04251

EA 0120F1

LAST REVISION 00-00-00
DATE PLOTTED => 3/31/2009
TIME PLOTTED => 3:15:38 PM

DIST	COUNTY	ROUTE	KILOMETER POST TOTAL PROJECT	SHEET No	TOTAL SHEETS
04	SF	80	13.2/13.9	169 R1	1204

REGISTERED ELECTRICAL ENGINEER 12/19/02 DATE

12-6-04
PLANS APPROVAL DATE

REGISTERED PROFESSIONAL ENGINEER JENS ERLINGSSON No. 8249 Exp. 9/30/06 ELECTRICAL STATE OF CALIFORNIA

PB POWER, Inc.
A Parsons Brinckerhoff Company
303 Second St., Suite 700N
San Francisco, CA 94107-1317

The State of California or its officers or agents shall not be responsible for the accuracy or completeness of electronic copies of this plan sheet.

Caltrans now has a web site! To get to the web site, go to http://www.dot.ca.gov

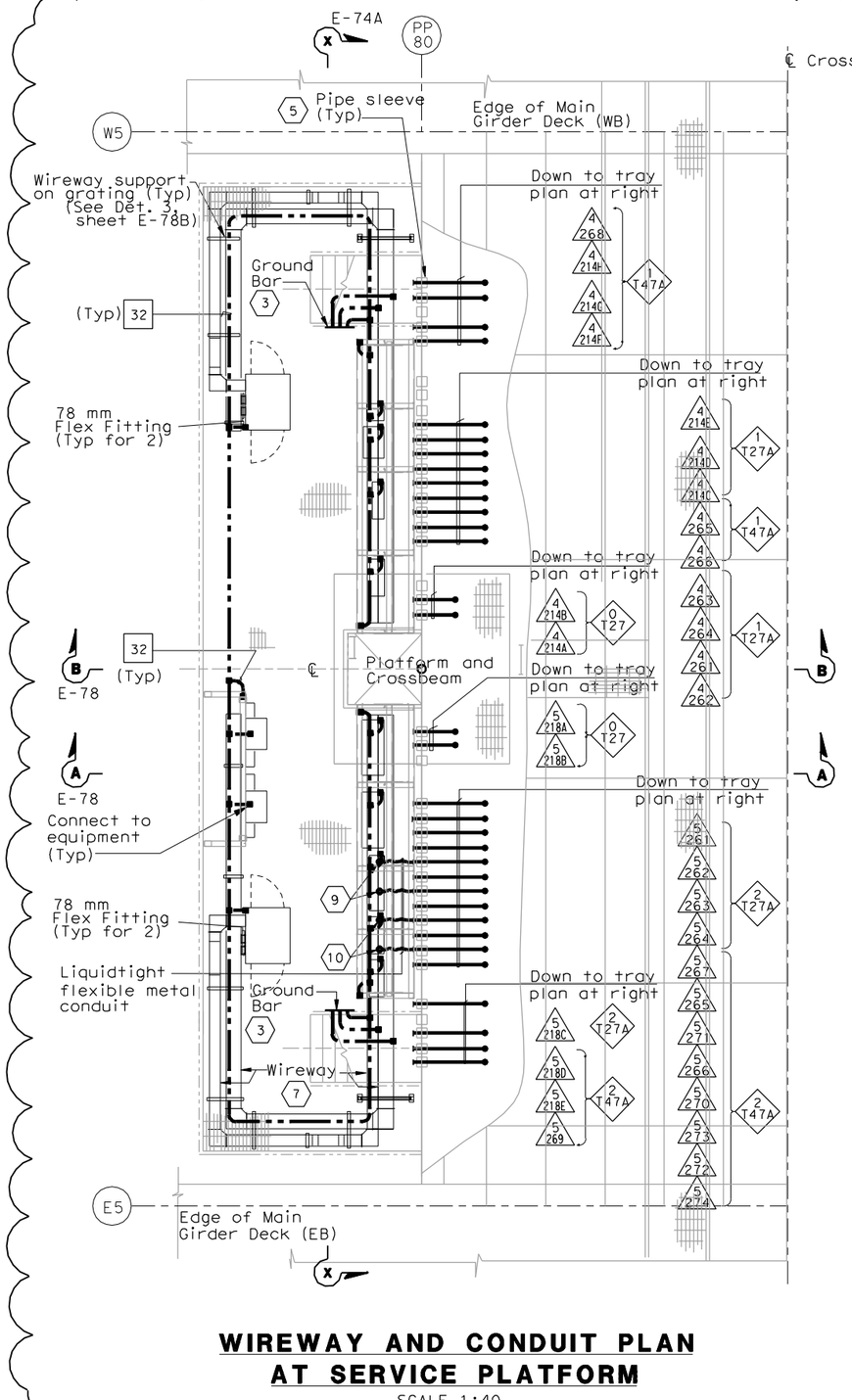

WIREWAY AND CONDUIT PLAN AT SERVICE PLATFORM

SCALE 1:40

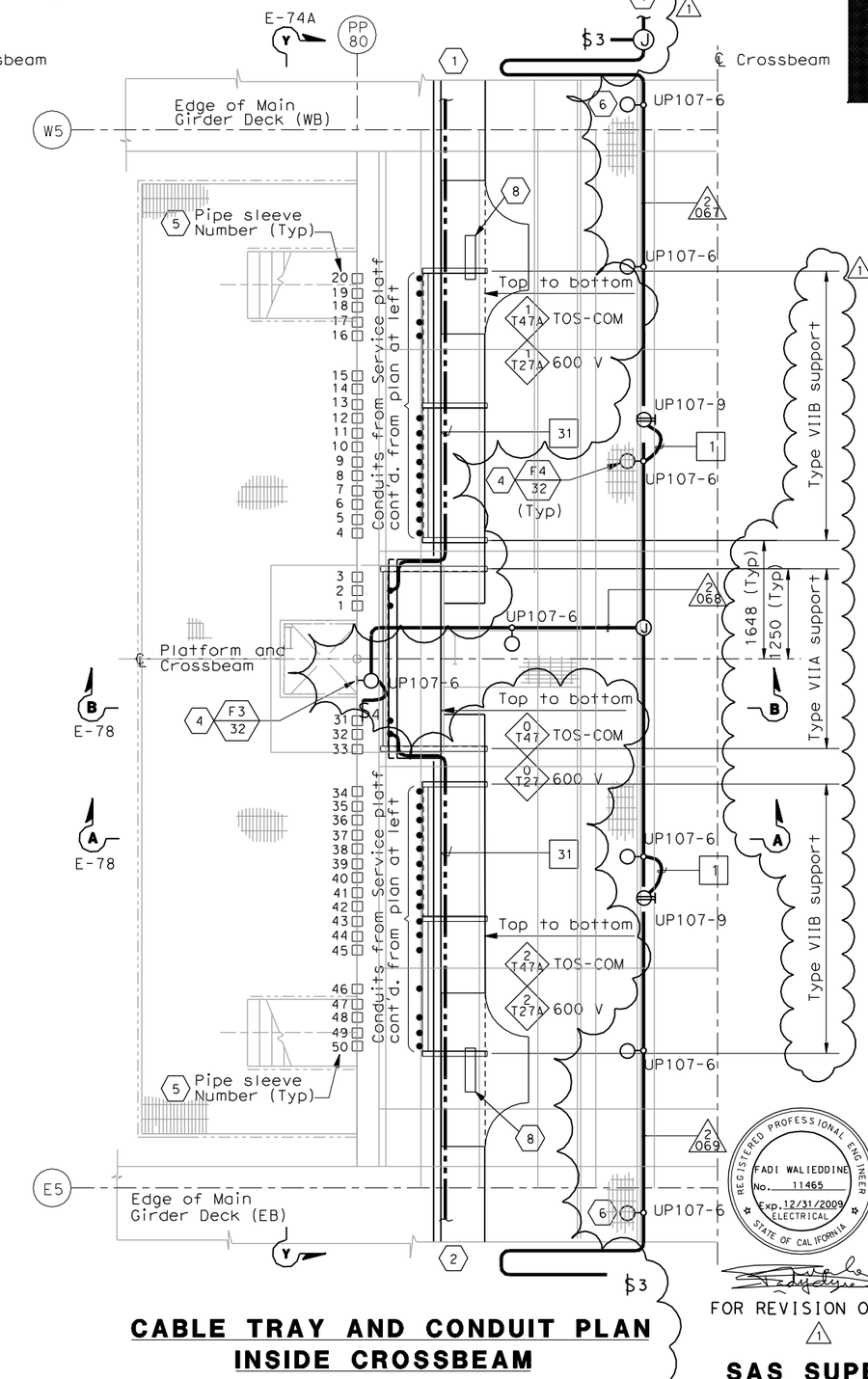

CABLE TRAY AND CONDUIT PLAN INSIDE CROSSBEAM

SCALE 1:40

SHEET NOTES:

1. For continuation inside WB girder, see sheets E-99 and E-114B.
2. For continuation inside EB girder, see sheet E-184 and E-114B.
3. For typical ground bar installation, see Detail 5 sheet E-78.
4. For typical lighting fixture installation see Details 2 and 3, sheet E-123.
5. Pipe sleeve without conduit going through is spare. Contractor to provide plug or cap at both ends. For location see Section Y-Y on sheet E-74A.
6. Locate light fixture approximate half way between girder wall and girder walkway.
7. For wireway numbers, see sheet E-74.
8. Fiber Optic splice closure, see Typical Fiber Optic Tray Detail Sheet E-355.
9. Terminate conduits at Terminal Box #TEL-7.
10. Terminate conduits at Terminal Box #COM-7.

NOTES:

1. Reference:
   - For circuit, conduit/cable tray schedules, see sheets starting at E-401.
2. For wireway support details, see AS sheets.
3. For location of pipe sleeves at the utility platform crossbeams, see Typical Crossbeam Details sheets.
4. For platform elevations, see sheet E-74A.

REGISTERED PROFESSIONAL ENGINEER FADI WALIEDDINE No. 11465 Exp. 12/31/2009 ELECTRICAL STATE OF CALIFORNIA

REQUEST FOR INFORMATION NOT ADDRESSED IN THIS CCO REMAIN IN FORCE

MARK	DATE	DESCRIPTIONS	BY	CH'D	CCO#
1	03/30/09	SERVICE PLATFORM ELECTRICAL CHANGES	RR MP	RG FW	55

REVISIONS

CONTRACT CHANGE ORDER NO._____

FOR REVISION ONLY SHEET _____ OF _____

1

DETAILS
SAS SUPERSTRUCTURE GIRDER WESTBOUND PLATFORM 7 CONDUIT, LIGHTING, AND GROUNDING PLAN

SCALE AS NOTED

E-117

THIS PLAN IS ACCURATE FOR ELECTRICAL WORK ONLY.

ALL DIMENSIONS ARE IN MILLIMETERS UNLESS OTHERWISE SHOWN.

FOR REDUCED PLANS ORIGINAL SCALE IS IN MILLIMETERS 0 20 40 60 80

DGN FILE =>T:\13103\MS\pse\SAS Struc\CCO\SAS CCO55\2009-03-30_Issued for Submittal\04-0120f1_0169R01.dgn
USERNAME =>llorico

CU 04251 | EA 0120F1

LAST REVISION 00-00-00
DATE PLOTTED => 4/1/2009
TIME PLOTTED => 8:58:17 AM

STATE OF CALIFORNIA - DEPARTMENT OF TRANSPORTATION
Caltrans

DESIGN OVERSIGHT BEHZAD GOLEMOHAMMADI
CALCULATED/DESIGNED BY
CHECKED BY
REVISED

DIST	COUNTY	ROUTE	KILOMETER POST TOTAL PROJECT	SHEET No	TOTAL SHEETS
04	SF	80	13.2/13.9	170 R1	1204

12/19/02
REGISTERED ELECTRICAL ENGINEER DATE

12-6-04
PLANS APPROVAL DATE

REGISTERED PROFESSIONAL ENGINEER JENS ERLINGSSON No. 8249 Exp. 9/30/06 ELECTRICAL STATE OF CALIFORNIA

PB POWER, Inc.
A Parsons Brinckerhoff Company
303 Second St., Suite 700N
San Francisco, CA 94107-1317

The State of California or its officers or agents shall not be responsible for the accuracy or completeness of electronic copies of this plan sheet.

Caltrans now has a web site! To get to the web site, go to http://www.dot.ca.gov

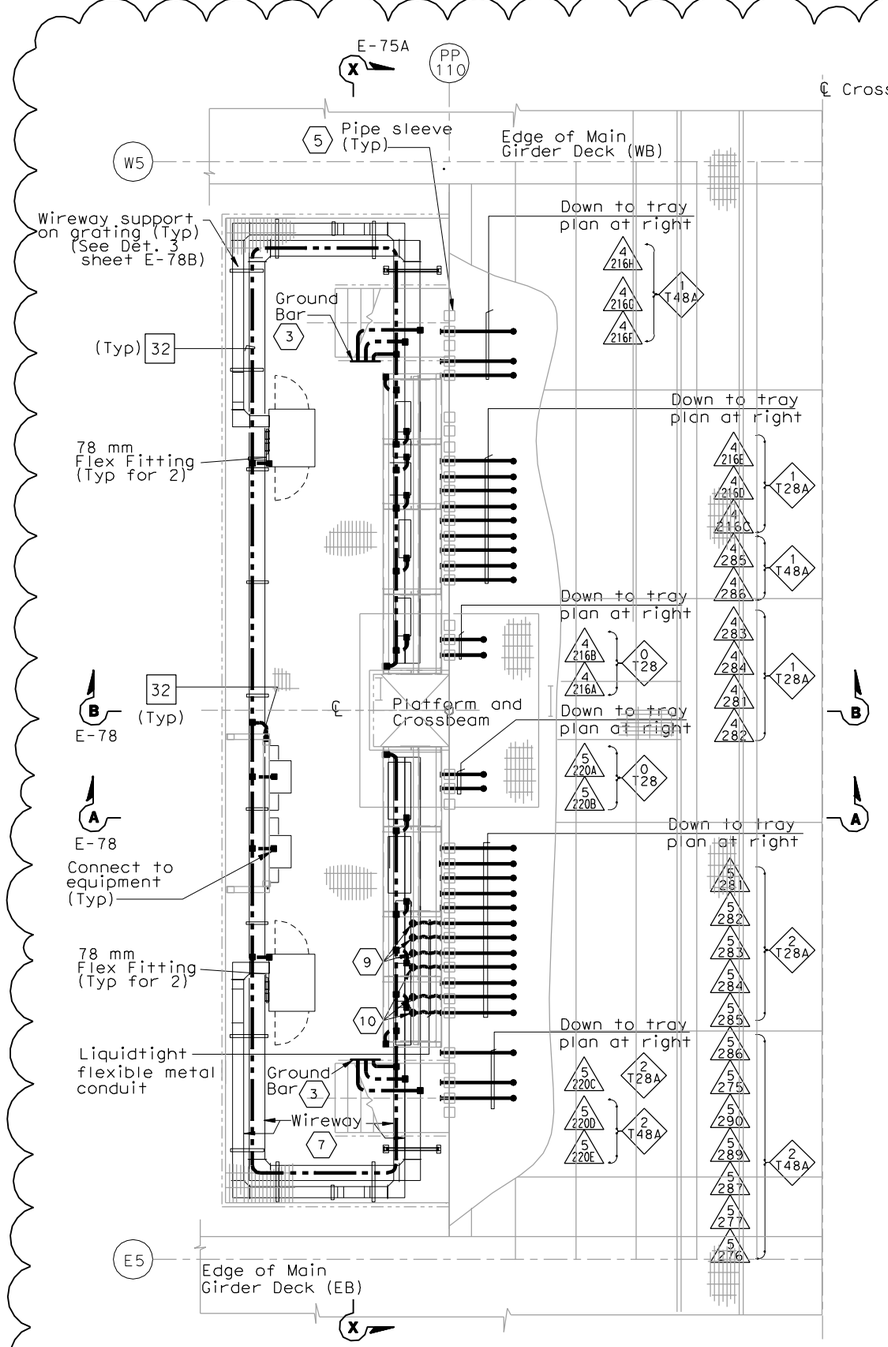

WIREWAY AND CONDUIT PLAN AT SERVICE PLATFORM

SCALE 1:40

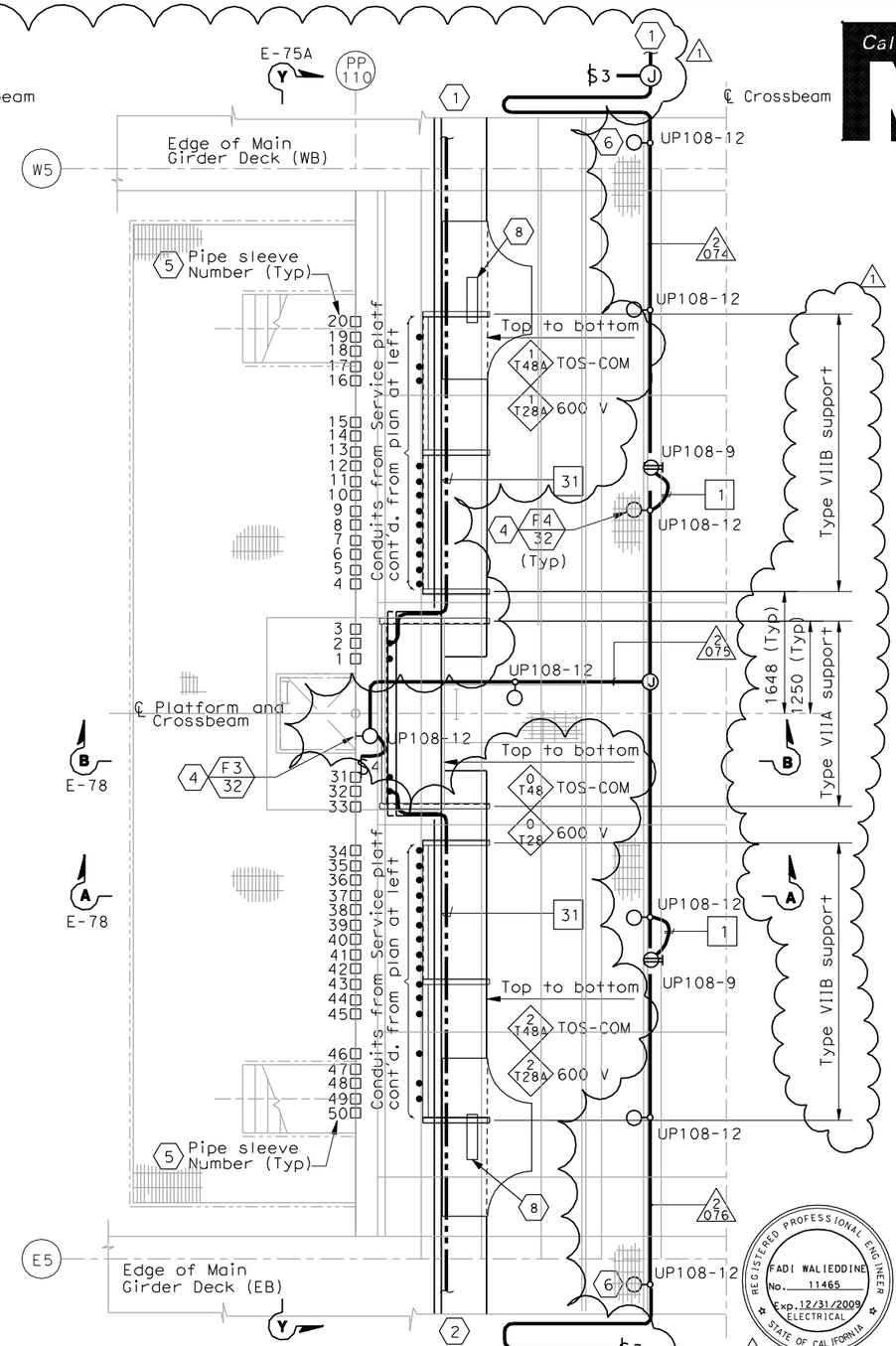

CABLE TRAY AND CONDUIT PLAN INSIDE CROSSBEAM

SCALE 1:40

SHEET NOTES:

1. For continuation inside WB girder, see sheets E-100 and E-114B.
2. For continuation inside EB girder, see sheet E-185 and E-114B.
3. For typical ground bar installation, see Detail 5 sheet E-78.
4. For typical lighting fixture installation see Details 2 and 3, sheet E-123.
5. Pipe sleeve without conduit going through is spare. Contractor to provide plug or cap at both ends. For location see Section Y-Y on sheet E-75A.
6. Locate light fixture approximate half way between girder wall and girder walkway.
7. For wireway numbers, see sheet E-75.
8. Fiber Optic splice closure, see Typical Fiber Optic Tray Detail Sheet E-355.
9. Terminate conduits at Terminal Box #TEL-8.
10. Terminate conduits at Terminal Box #COM-8.

NOTES:

1. Reference:
   - For circuit, conduit/cable tray schedules, see sheets starting at E-401.
2. For wireway support details, see AS sheets.
3. For location of pipe sleeves at the utility platform crossbeams, see Typical Crossbeam Details sheets.

REGISTERED PROFESSIONAL ENGINEER FADI WALIEDDINE No. 11465 Exp. 12/31/2009 ELECTRICAL STATE OF CALIFORNIA

REQUEST FOR INFORMATION NOT ADDRESSED IN THIS CCO REMAIN IN FORCE

MARK	DATE	DESCRIPTIONS	BY	CH'D	CCO#
1	03/30/09	SERVICE PLATFORM ELECTRICAL CHANGES	RR MP	RG FW	55

REVISIONS

1

FOR REVISION ONLY

CONTRACT CHANGE ORDER NO._____
SHEET ____ OF ____

DETAILS
SAS SUPERSTRUCTURE GIRDER WESTBOUND PLATFORM 8 CONDUIT, LIGHTING, AND GROUNDING PLAN

SCALE AS NOTED

E-118

CALCULATED/ DESIGNED BY	JP	DATE 7/01	REVISED BY
CHECKED BY	BL	12/01	DATE REVISED

DESIGN OVERSIGHT
BEHZAD GOLEMOHAMMADI

STATE OF CALIFORNIA - DEPARTMENT OF TRANSPORTATION
Caltrans

THIS PLAN IS ACCURATE FOR ELECTRICAL WORK ONLY.

ALL DIMENSIONS ARE IN MILLIMETERS UNLESS OTHERWISE SHOWN.

FOR REDUCED PLANS ORIGINAL SCALE IS IN MILLIMETERS 0 20 40 60 80

DGN FILE =>T:\13103\MS\pse\SAS Struc\CCO\SAS CCO55\2009-03-30_Issued for Submittal\04-0120f1_D170R01.dgn
USERNAME =>llorico

CU 04251 | EA 0120F1

LAST REVISION 00-00-00
DATE PLOTTED => 4/1/2009
TIME PLOTTED => 8:58:52 AM

DIST	COUNTY	ROUTE	KILOMETER POST TOTAL PROJECT	SHEET No	TOTAL SHEETS
04	SF	80	13.2/13.9	176 S1R1	1204

REGISTERED ELECTRICAL ENGINEER — DATE 2/22/08

REGISTERED PROFESSIONAL ENGINEER S. A. ESTOQUE, JR. No. E-10151 Exp. 12/31/2008 STATE OF CALIFORNIA

PLANS APPROVAL DATE

PB AMERICAS, Inc.
A Parsons Brinckerhoff Company
303 Second St., Suite 700N
San Francisco, CA 94107-1317

The State of California or its officers or agents shall not be responsible for the accuracy or completeness of electronic copies of this plan sheet.

Caltrans now has a web site! To get to the web site, go to http://www.dot.ca.gov

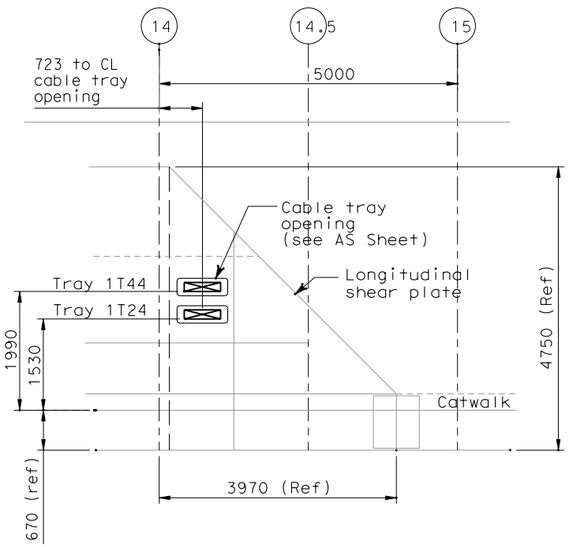

DETAIL 1

Cable penetration thru longitudinal shear plate
Scale 1:50

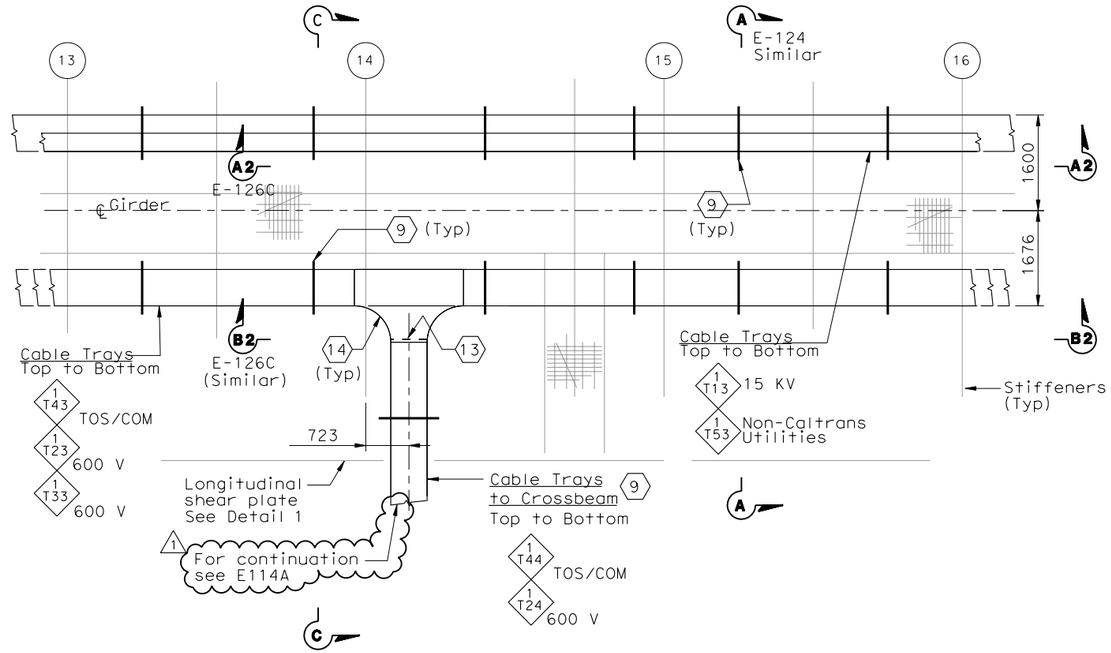

PLAN- CABLE TRAY AT PP-14

Scale 1:50

SHEET NOTES:

1. Type I, for cable tray supports details, see AS sheets.
2. Type II, for cable tray supports details, see AS sheets.
3. Type V, for cable tray supports details, see AS sheets.
4. Type VI, for cable tray supports details, see AS sheets.
5. Type VII, for cable tray supports details, see AS sheets.
6. Type VIIA, for cable tray supports details, see AS sheets.
7. Type VIIB, for cable tray supports details, see AS sheets.
8. The Contractor to provide cable tray support at each ends of cable tray fitting as required.
9. For cable tray support see AS-Sheets.
10. Pull Box PB-2A and PB-2L shall be located on top of stiffener. The Contractor shall provide strut channel for support installed in field.
11. The Contractor shall provide strut channel on top of stiffener for conduit support and installed in field.
12. The Contractor to provide grounding bushing at each end of the conduit.
13. The Contractor to provide secondary support installed in field. See Detail 2 on dwg E124C.
14. Cable tray tee fitting shall be 305 mm radius.

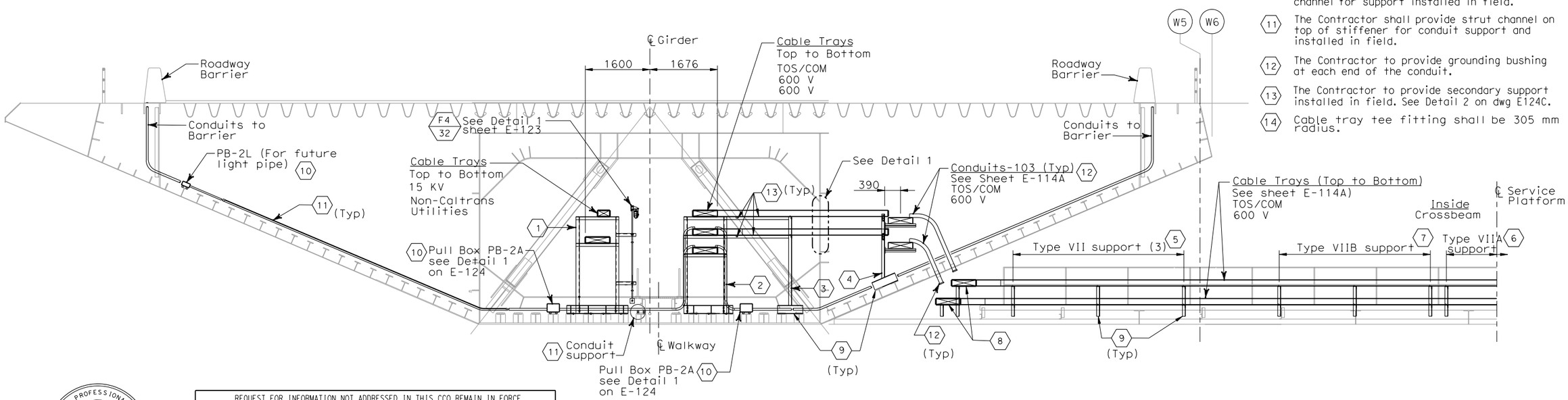

SECTION C - C

(Cable Tray and Support to Crossbeam Panel Point PP-14)
Scale 1:50

FADI WALIEDDINE REGISTERED PROFESSIONAL ENGINEER No. 11465 Exp. 12/31/2009 ELECTRICAL STATE OF CALIFORNIA

FOR REVISION ONLY 1

REQUEST FOR INFORMATION NOT ADDRESSED IN THIS CCO REMAIN IN FORCE					
1	03/30/09	SERVICE PLATFORM ELECTRICAL CHANGES	RG	FW	55
0	02/25/08	CABLE TRAY CHANGES	TW	RG SE	42S1
MARK	DATE	DESCRIPTIONS	BY	CH'D	CCO#
REVISIONS					

CONTRACT CHANGE ORDER NO._____
SHEET _____ OF _____

DETAILS
SAS SUPERSTRUCTURE GIRDER WESTBOUND
TYPICAL TRAY AND CONDUIT INSTALLATION

SCALE AS NOTED

E-124A

THIS PLAN IS ACCURATE FOR ELECTRICAL WORK ONLY.

ALL DIMENSIONS ARE IN MILLIMETERS UNLESS OTHERWISE SHOWN

FOR REDUCED PLANS ORIGINAL SCALE IS IN MILLIMETERS 0 20 40 60 80

DGN FILE =>T:\13103\MS\pse\SAS Struc\CCO\SAS CC055\04-0120f1_0176S01R01.dgn
USERNAME =>garciar

CU 04251 | EA 0120F1

LAST REVISION 00-00-00 | DATE PLOTTED => 3/31/2009 TIME PLOTTED => 2:47:57 PM

STATE OF CALIFORNIA - DEPARTMENT OF TRANSPORTATION
Caltrans

DESIGN OVERSIGHT
BEHZAD GOLEMOHAMMADI

CALCULATED/DESIGNED BY | CHECKED BY | DATE REVISED BY | DATE REVISED

DIST	COUNTY	ROUTE	KILOMETER POST TOTAL PROJECT	SHEET No	TOTAL SHEETS
04	SF	80	13.2/13.9	176 S2R1	1204

REGISTERED ELECTRICAL ENGINEER — DATE 2/22/08

PLANS APPROVAL DATE

REGISTERED PROFESSIONAL ENGINEER S. A. ESTOQUE, JR. No. E-10151 Exp. 12/31/2008 ELECTRICAL STATE OF CALIFORNIA

PB AMERICAS, Inc.
A Parsons Brinckerhoff Company
303 Second St., Suite 700N
San Francisco, CA 94107-1317

The State of California or its officers or agents shall not be responsible for the accuracy or completeness of electronic copies of this plan sheet.

Caltrans now has a web site! To get to the web site, go to http://www.dot.ca.gov

Caltrans Metric

SHEET NOTES:

1. Type I, for cable tray supports details, see AS sheets.
2. Type II, for cable tray supports details, see AS sheets.
3. Type V, for cable tray supports details, see AS sheets.
4. Type VI, for cable tray supports details, see AS sheets.
5. Type VII, for cable tray supports details, see AS sheets.
6. Type VIIA, for cable tray supports details, see AS sheets.
7. Type VIIB, for cable tray supports details, see AS sheets.
8. The Contractor to provide cable tray support at each ends of cable tray fitting as required.
9. Pull Box PB-2A and PB-2L shall be located on top of stiffener. The Contractor shall provide strut channel for support installed in field.
10. The Contractor shall provide strut channel on top of stiffener for conduit support and installed in field.
11. The Contractor to provide grounding bushing at each end of the conduit.
12. The Contractor to provide suitable secondary tray support installed in field. See Detail 3 on drawing E-124C.
13. For cable tray support see AS-Sheets.
14. Cable tray tee fitting shall have 305mm radius.
15. For tray numbers to PP 50, PP-80 and PP-110, see sheet E-114B.

REGISTERED PROFESSIONAL ENGINEER FADI WALIEDDINE No. 11465 Exp. 12/31/2009 ELECTRICAL STATE OF CALIFORNIA

FOR REVISION ONLY
1

REQUEST FOR INFORMATION NOT ADDRESSED IN THIS CCO REMAIN IN FORCE

MARK	DATE	DESCRIPTIONS	BY	CH'D	CCO#
1	03/30/09	SERVICE PLATFORM ELECTRICAL CHANGES	RG	FW	55
0	02/25/08	CABLE TRAY CHANGES	TW	RG SE	42S1

REVISIONS

CONTRACT CHANGE ORDER NO. _____
SHEET _____ OF _____

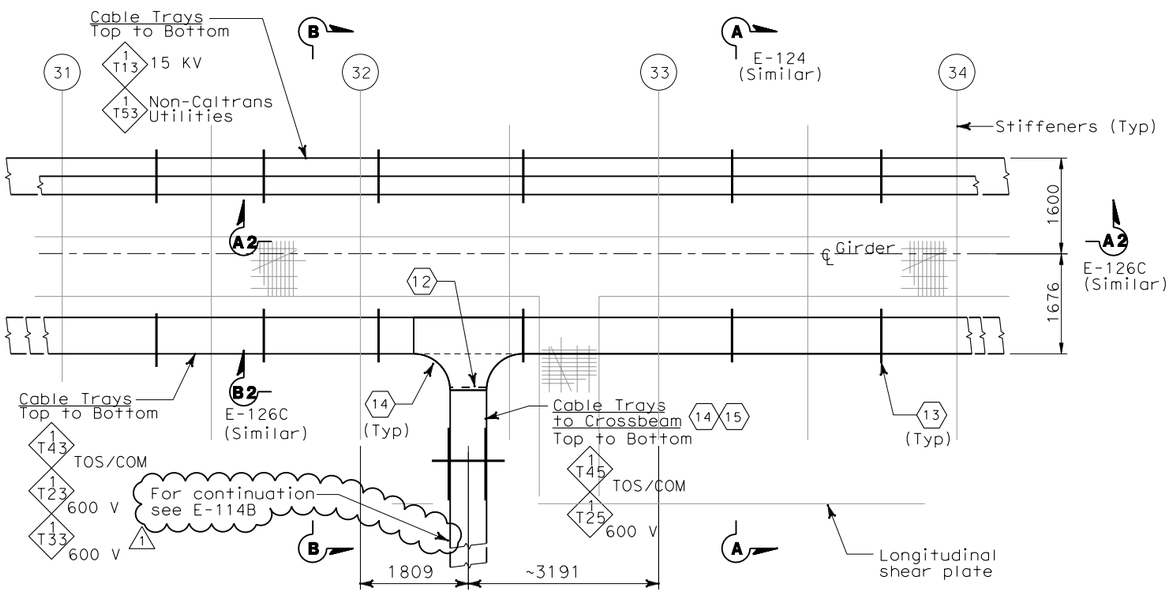

PLAN- CABLE TRAY AT PP 32

(SIMILAR FOR LOCATION AT PP 50, PP80 and PP-110)
SCALE 1:50

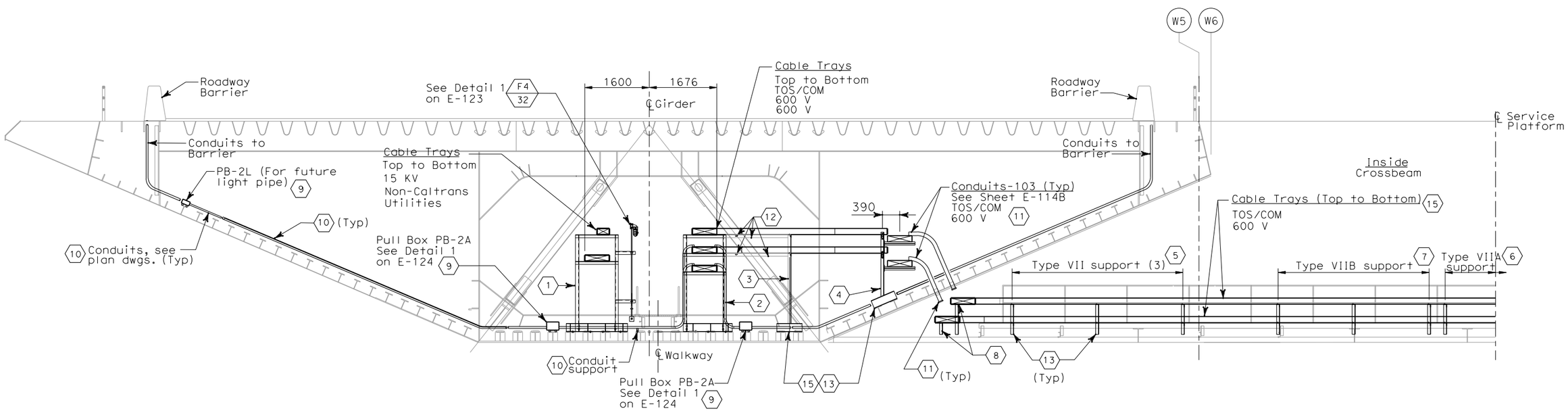

SECTION B-B

(TYPICAL CABLE TRAY AND SUPPORT TO CROSSBEAM
PP-32, PP-50, PP-80 AND PP-110)
SCALE 1:50

DETAILS
SAS SUPERSTRUCTURE GIRDER WESTBOUND
TYPICAL TRAY AND CONDUIT INSTALLATION

SCALE AS NOTED

E-124B

THIS PLAN IS ACCURATE FOR ELECTRICAL WORK ONLY.

ALL DIMENSIONS ARE IN MILLIMETERS UNLESS OTHERWISE SHOWN

CALCULATED/DESIGNED BY	FK	DATE 08/02	REVISED BY	IAH 3/04
CHECKED BY	IAH	08/02	DATE REVISED	

DESIGN OVERSIGHT — BEHZAD GOLEMOHAMMADI

STATE OF CALIFORNIA - DEPARTMENT OF TRANSPORTATION — Caltrans

LAST REVISION 00-00-00 — DATE PLOTTED => 3/31/2009 TIME PLOTTED => 2:47:06 PM

FOR REDUCED PLANS ORIGINAL SCALE IS IN MILLIMETERS 0 20 40 60 80

DGN FILE =>T:\13103\MS\pse\SAS Struc\CCO\SAS CC055\04-0120f1_0176S02R01.dgn
USERNAME =>garciar

CU 04251

EA 0120F1

DIST	COUNTY	ROUTE	KILOMETER POST TOTAL PROJECT	SHEET No	TOTAL SHEETS
04	SF	80	13.2/13.9	199 R1	1204

REGISTERED ELECTRICAL ENGINEER 12/19/02 DATE

12-6-04
PLANS APPROVAL DATE

REGISTERED PROFESSIONAL ENGINEER JENS ERLINGSSON No. 8249 Exp. 9/30/06 ELECTRICAL STATE OF CALIFORNIA

PB POWER, Inc.
A Parsons Brinckerhoff Company
303 Second St., Suite 700N
San Francisco, CA 94107-1317

The State of California or its officers or agents shall not be responsible for the accuracy or completeness of electronic copies of this plan sheet.

Caltrans now has a web site! To get to the web site, go to http://www.dot.ca.gov

Caltrans Metric

UTILITY PANEL UP-204 (CKT #2095)

Location: SAS SUPERSTRUCTURE SERVICE PLATFORM #4

LOAD DESCRIPTION	LTG	REC	OTH.	CB		CB	LTG	REC	OTH.	LOAD DESCRIPTION
Recept (2) Eastbound North Barrier		360		20/1	1 A 2	20/1				Spare
Spare				20/1	3 B 4	20/1				↓
Recept (2) Service Platform #4		360		20/1	5 C 6	20/1				Spare
Recept (2) Girder		360		20/1	7 A 8	20/1	574			Girder Lighting (14)
Spare				20/1	9 B 10	(1) 30/1			2000	Controller Cabinet #TOS-4EA
Spare				20/1	11 C 12	20/1				Spare
TOTAL VA		1080					574		2000	TOTAL VA

LOAD SUMMARY (INCLUDES .90 PF) (VA)

Lighting (At 100%): 574
Gen Use (1st 10 kVA at 100% Plus 50% of remainder): 3080

TOTAL kVA: 3.654

BALANCE (kVA)

Phase A - 1.294
Phase B - 2.000
Phase C - 0.360

VOLTAGE: 208/120 V
PHASE/WIRES: 3-phase, 4-wire
BUS RATING: 100 A
MAINS: MAIN LUGS ONLY (1)
MOUNTING: Surface
K.A.I.C.: 10

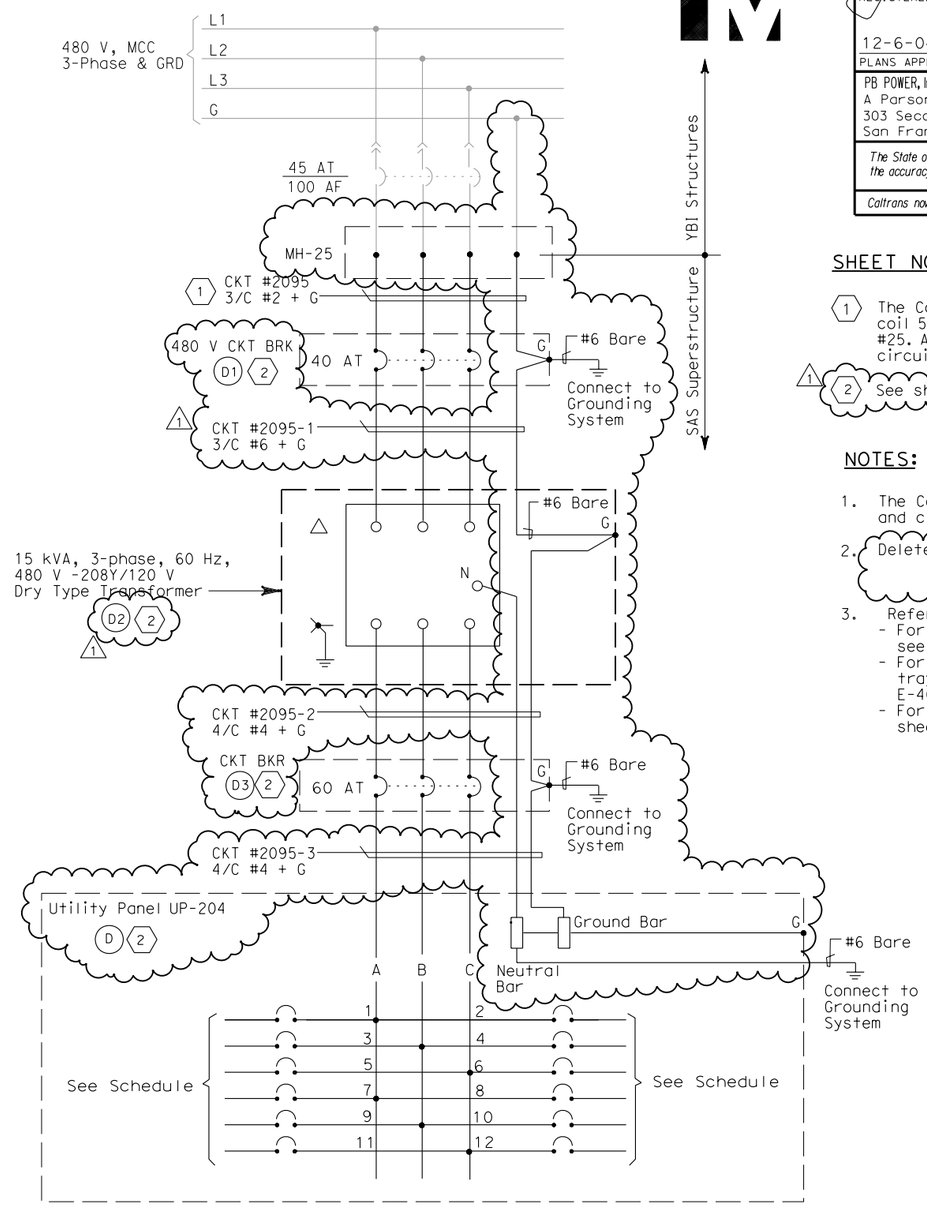

SHEET NOTES:

(1) The Contractor shall extend and coil 5.0 meters of cable in manhole #25. All cables shall be tagged with circuit numbers as shown.

(1) (2) See sheet E-71 for Equipment Schedule.

NOTES:

1. The Contractor shall provide nameplates and circuit schedules as shown.
2. Deleted. (1)
3. References:
   - For LVCC-B single line diagram, see sheets E-32 thru E-34.
   - For circuit and conduit/cable tray schedules, see sheets starting at E-401.
   - For pull box schedule, see sheet E-169.

REGISTERED PROFESSIONAL ENGINEER FADI WALIEDDINE No. 11465 Exp. 12/31/2009 ELECTRICAL STATE OF CALIFORNIA

FOR REVISION ONLY (1)

REQUEST FOR INFORMATION NOT ADDRESSED IN THIS CCO REMAIN IN FORCE

MARK	DATE	DESCRIPTIONS	BY	CH'D	CCO#
(1)	03/30/09	SERVICE PLATFORM ELECTRICAL CHANGES	RR MP	RG FW	55

REVISIONS

CONTRACT CHANGE ORDER NO._____
SHEET _____ OF _____

DETAILS
SAS SUPERSTRUCTURE ROADWAY EASTBOUND PANEL UP-204 SCHEDULE
NO SCALE

E-150

STATE OF CALIFORNIA - DEPARTMENT OF TRANSPORTATION
Caltrans

DESIGN OVERSIGHT
BEHZAD GOLEMOHAMMADI

CALCULATED/DESIGNED BY JP
CHECKED BY BL
DATE REVISED 09/01
DATE REVISED 11/01
REVISED BY

LAST REVISION 00-00-00
DATE PLOTTED => 3/31/2009
TIME PLOTTED => 2:46:24 PM

FOR REDUCED PLANS ORIGINAL SCALE IS IN MILLIMETERS 0 20 40 60 80

DGN FILE =>T:\13103\MS\pse\SAS Struc\CCO\SAS CCO55\04-0120f1_0199R01.dgn
USERNAME =>garciar

CU 04251

EA 0120F1

DIST	COUNTY	ROUTE	KILOMETER POST TOTAL PROJECT	SHEET No	TOTAL SHEETS
04	SF	80	13.2/13.9	200 R3	1204

REGISTERED ELECTRICAL ENGINEER 12/19/02 DATE

12-6-04
PLANS APPROVAL DATE

REGISTERED PROFESSIONAL ENGINEER JENS ERLINGSSON No. 8249 Exp. 9/30/06 ELECTRICAL STATE OF CALIFORNIA

PB POWER, Inc.
A Parsons Brinckerhoff Company
303 Second St., Suite 700N
San Francisco, CA 94107-1317

The State of California or its officers or agents shall not be responsible for the accuracy or completeness of electronic copies of this plan sheet.

Caltrans now has a web site! To get to the web site, go to http://www.dot.ca.gov

Caltrans Metric

UTILITY PANEL UP-205 (CKT #2096)

Location: SAS SUPERSTRUCTURE SERVICE PLATFORM #5

LOAD DESCRIPTION	LTG	REC	OTH.	CB		CB	LTG	REC	OTH.	LOAD DESCRIPTION
Recept (2) Eastbound North Barrier		360		20/1	1 A 2	20/1				Spare
Spare				20/1	3 B 4	20/1				Spare
Recept (2) Service Platform #5		360		20/1	5 C 6	20/1				Spare
Recept (2) Girder		360		20/1	7 A 8	20/1	738			Girder Lighting (18)
RTU #10E (PLC Power Supply)			100	20/1	9 B 10	20/1				Spare
RTU-#10E (Lighting & Receptacle)	105	180	150	20/1	11 C 12	20/1				Spare
TOTAL WATTS	105	1260	250				738			TOTAL VA

LOAD SUMMARY (INCLUDES .90 PF) (VA)

Lighting (At 100%): 843
Gen Use (1st 10 kVA at 100% Plus 50% of remainder): 1540

TOTAL kVA: 2.353 (3)

BALANCE (kVA)

Phase A - 1.458 (3)
Phase B - 0.100
Phase C - 0.795

VOLTAGE: 208Y/120 V
PHASE/WIRES: 3-phase, 4-wire
BUS RATING: 100 A
MAIN: MAIN LUGS ONLY (3)
MOUNTING: Surface
K.A.I.C.: 10

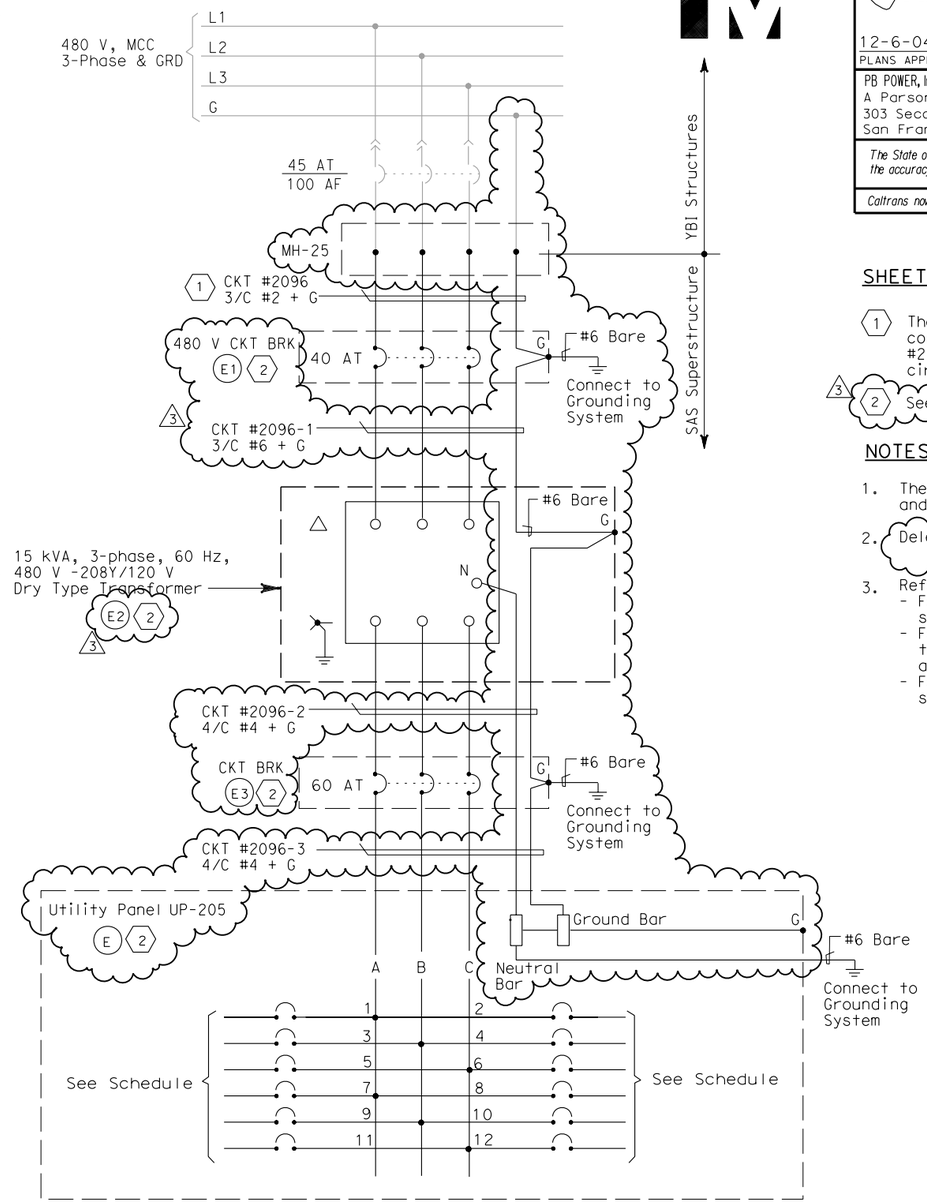

SHEET NOTES:

(1) The Contractor shall extend and coil 5.0 meters of cable in manhole #25. All cables shall be tagged with circuit numbers as shown.

(3) (2) See sheet E-72 for Equipment Schedule.

NOTES:

1. The Contractor shall provide nameplates and circuit schedules as shown.
2. Deleted (3)
3. References:
   - For LVCC-B single line diagram, see sheets E-32 thru E-34.
   - For circuit and conduit/cable tray schedules, see sheets starting at E-401.
   - For pull box schedule, see sheet E-169.

REGISTERED PROFESSIONAL ENGINEER MARRELL FUMIO TAKAHASHI No. E 8651 Exp. 9/30/2008 ELECTRICAL STATE OF CALIFORNIA
FOR REVISION ONLY (1)

REGISTERED PROFESSIONAL ENGINEER S. A. ESTOQUE, JR No. E-10151 Exp. 12/31/2008 ELECTRICAL STATE OF CALIFORNIA
FOR REVISION ONLY (2)

REGISTERED PROFESSIONAL ENGINEER FADI WALIEDDINE No. 11465 Exp. 12/31/2009 ELECTRICAL STATE OF CALIFORNIA
FOR REVISION ONLY (3)

REQUEST FOR INFORMATION NOT ADDRESSED IN THIS CCO REMAIN IN FORCE

MARK	DATE	DESCRIPTIONS	BY	CH'D	CCO#
(3)	03/30/09	SERVICE PLATFORM ELECTRICAL CHANGES	RR MP	RG FW	55
(2)	03/04/08	BARRIER MODIFICATIONS	JS BM	RG SE	44
(1)	02/19/08	ELECTRICAL MODIFICATIONS	MP EL	RR	42

REVISIONS

CONTRACT CHANGE ORDER NO._____
SHEET _____ OF _____

THIS PLAN ACCURATE FOR ELECTRICAL WORK ONLY.

DETAILS
SAS SUPERSTRUCTURE ROADWAY EASTBOUND PANEL UP-205 SCHEDULE
NO SCALE

E-151

		REVISED BY	DATE REVISED
DATE 7/01	JP	12/01	BL
CALCULATED/ DESIGNED BY		CHECKED BY	

DESIGN OVERSIGHT
BEHZAD GOLEMOHAMMADI

STATE OF CALIFORNIA - DEPARTMENT OF TRANSPORTATION
Caltrans

LAST REVISION 00-00-00
DATE PLOTTED => 3/31/2009
TIME PLOTTED => 2:45:57 PM

FOR REDUCED PLANS ORIGINAL SCALE IS IN MILLIMETERS 0 20 40 60 80

DGN FILE =>T:\13103\MS\pse\SAS Struc\CCO\SAS CC055\04-0120f1_0200R03.dgn
USERNAME =>garciar

CU 04251 EA 0120F1

DIST	COUNTY	ROUTE	KILOMETER POST TOTAL PROJECT	SHEET No	TOTAL SHEETS
04	SF	80	13.2/13.9	201 R1	1204

12/19/02
REGISTERED ELECTRICAL ENGINEER DATE

12-6-04
PLANS APPROVAL DATE

REGISTERED PROFESSIONAL ENGINEER JENS ERLINGSSON No. 8249 Exp. 9/30/06 ELECTRICAL STATE OF CALIFORNIA

PB POWER, Inc.
A Parsons Brinckerhoff Company
303 Second St., Suite 700N
San Francisco, CA 94107-1317

The State of California or its officers or agents shall not be responsible for the accuracy or completeness of electronic copies of this plan sheet.

Caltrans now has a web site! To get to the web site, go to http://www.dot.ca.gov

Caltrans Metric

UTILITY PANEL UP-206 (CKT #2097)

Location: SAS SUPERSTRUCTURE SERVICE PLATFORM #6

LOAD DESCRIPTION	LTG	REC	OTH.	CB		CB	LTG	REC	OTH.	LOAD DESCRIPTION
Recept (2) Eastbound North Barrier		360		20/1	1 A 2	20/1				Spare
Spare				20/1	3 B 4	20/1				Spare
Recept (2) Service Platform #6		360		20/1	5 C 6	20/1	738			Girder Lighting (18)
Recept (2) Girder		360		20/1	7 A 8	20/1	738			Girder Lighting (18)
Navigation Relay Cabinet #NAP-6E			600	20/1	9 B 10	30/1 (1)			2000	Controller Cabinet #TOS-6EA
Spare				20/1	11 C 12	20/1				Spare
TOTAL VA		1080	600				1476		2000	TOTAL VA

LOAD SUMMARY (INCLUDES .90 PF) (VA)

Lighting (At 100%): 1476
Gen Use (1st 10 kVA at 100% Plus 50% of remainder): 3680

TOTAL kVA: 5.156

BALANCE (kVA)

Phase A - 1.458
Phase B - 2.600
Phase C - 1.098

VOLTAGE: 208/120 V
PHASE/WIRES: 3-phase, 4-wire
BUS ~~RATING: 100 A~~
MAIN: MAIN LUGS ONLY (1)
MOUNTING: ~~Surface~~
K.A.I.C.: 10

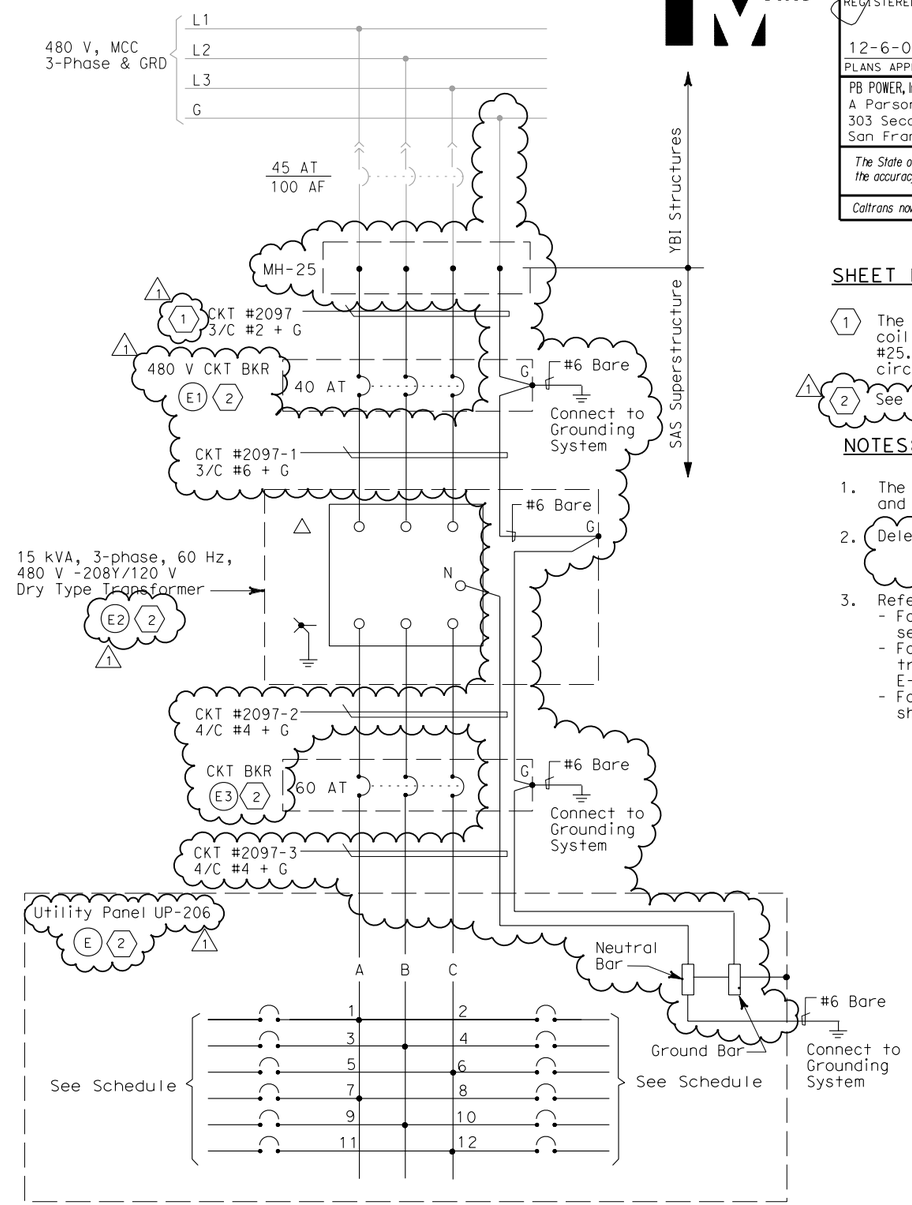

SHEET NOTES:

(1) The Contractor shall extend and coil 5.0 meters of cable in manhole #25. All cables shall be tagged with circuit numbers as shown.

(1) (2) See sheet E-73 for Equipment Schedule.

NOTES:

1. The Contractor shall provide nameplates and circuit schedules as shown. (1)
2. Deleted.
3. References:
   - For LVCC-B single line diagram, see sheets E-32 thru E-34.
   - For circuit and conduit/cable tray schedules, see sheets starting at E-401.
   - For pull box schedule, see sheet E-169.

REGISTERED PROFESSIONAL ENGINEER FADI WALIEDDINE No. 11465 Exp. 12/31/2009 ELECTRICAL STATE OF CALIFORNIA

FOR REVISION ONLY (1)

REQUEST FOR INFORMATION NOT ADDRESSED IN THIS CCO REMAIN IN FORCE					
(1)	03/30/09	SERVICE PLATFORM ELECTRICAL CHANGES	RR MP	RG FW	55
MARK	DATE	DESCRIPTIONS	BY	CH'D	CCO#
REVISIONS					

CONTRACT CHANGE ORDER NO._____
SHEET _____ OF _____

DETAILS
SAS SUPERSTRUCTURE ROADWAY EASTBOUND PANEL UP-206 SCHEDULE
NO SCALE

E-152

DATE	REVISED BY	DATE	REVISED
09/01	JP	11/01	BL

CALCULATED/DESIGNED BY JP
CHECKED BY BL

DESIGN OVERSIGHT
BEHZAD GOLEMOHAMMADI

STATE OF CALIFORNIA - DEPARTMENT OF TRANSPORTATION
Caltrans

LAST REVISION 00-00-00
DATE PLOTTED => 3/31/2009
TIME PLOTTED => 2:45:04 PM

FOR REDUCED PLANS ORIGINAL SCALE IS IN MILLIMETERS 0 20 40 60 80

DGN FILE =>T:\13103\MS\pse\SAS Struc\CCO\SAS CC055\04-0120f1_0201R01.dgn
USERNAME =>garciar

CU 04251

EA 0120F1

DIST	COUNTY	ROUTE	KILOMETER POST TOTAL PROJECT	SHEET No.	TOTAL SHEETS
04	SF	80	13.2/13.9	202 R1	1204

REGISTERED ELECTRICAL ENGINEER 12/19/02 DATE

12-6-04
PLANS APPROVAL DATE

REGISTERED PROFESSIONAL ENGINEER JENS ERLINGSSON No. 8249 Exp. 9/30/06 ELECTRICAL STATE OF CALIFORNIA

PB POWER, Inc.
A Parsons Brinckerhoff Company
303 Second St., Suite 700N
San Francisco, CA 94107-1317

The State of California or its officers or agents shall not be responsible for the accuracy or completeness of electronic copies of this plan sheet.

Caltrans now has a web site! To get to the web site, go to http://www.dot.ca.gov

Caltrans Metric

UTILITY PANEL UP-207 (CKT #2098)

Location: SAS SUPERSTRUCTURE SERVICE PLATFORM #7

LOAD DESCRIPTION	LTG	REC	OTH.	CB		CB	LTG	REC	OTH.	LOAD DESCRIPTION
Recept (1) Eastbound North Barrier		180		20/1	1 A 2	20/1				Spare
Spare				20/1	3 B 4	20/1				Spare
Recept (2) Service Platform #7		360		20/1	5 C 6	20/1				Spare
Recept (2) Girder		360		20/1	7 A 8	20/1	738			Girder Lighting (18)
Spare				20/1	9 B 10	30/1 (1)			2000	Controller Cabinet #TOS-7EA
↓				20/1	11 C 12	20/1				Spare
TOTAL WATTS		900					738		2000	TOTAL VA

LOAD SUMMARY (INCLUDES .90 PF) (VA)

Lighting (At 100%): 738
Gen Use (1st 10 kVA at 100% Plus 50% of remainder): 2900

TOTAL kVA: 3.638

BALANCE (kVA)

Phase A - 1.278
Phase B - 2.000
Phase C - 0.360

VOLTAGE: 208/120 V
PHASE/WIRES: 3-phase, 4-wire
BUS RATING: 100 A
MAIN: MAIN LUGS ONLY (1)
MOUNTING: Surface
K.A.I.C.: 10

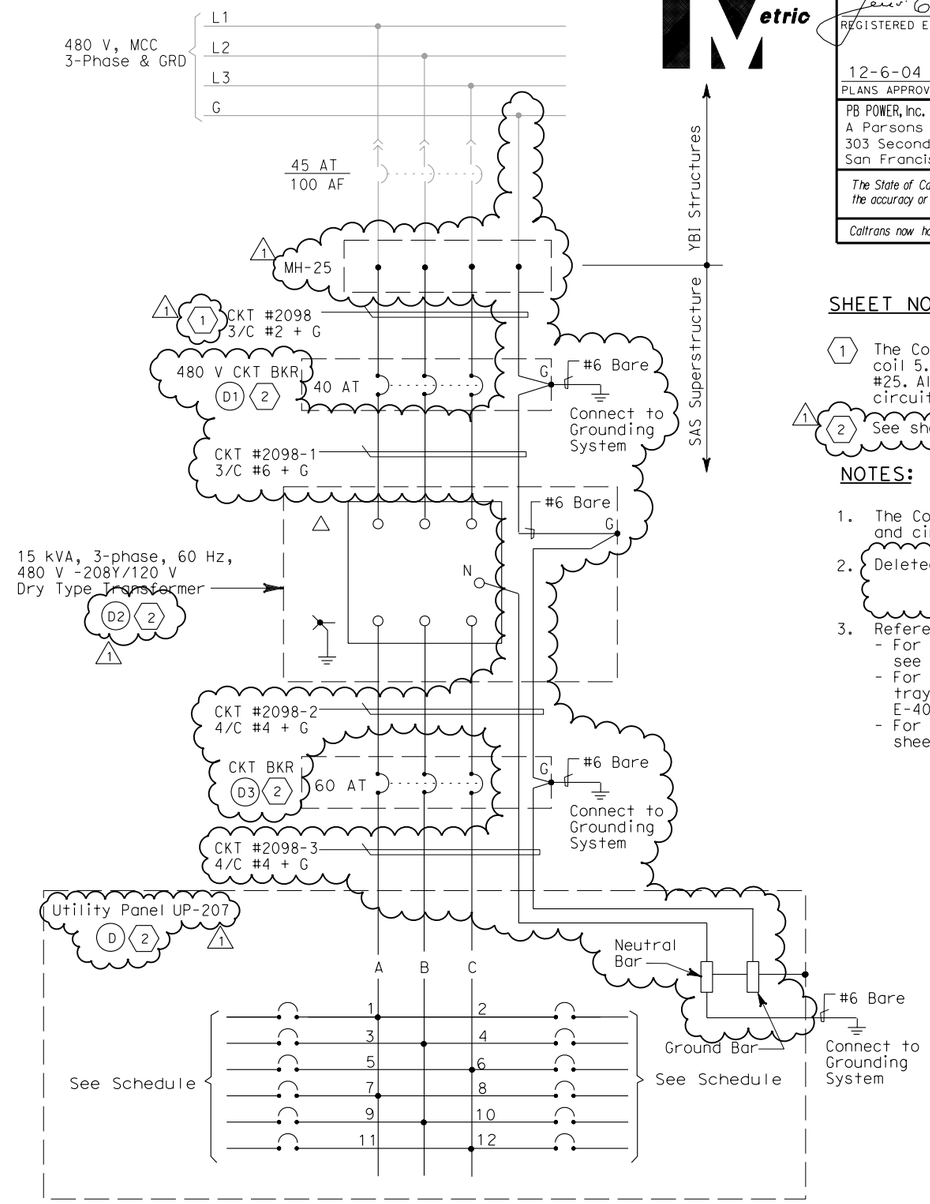

SHEET NOTES:

(1) The Contractor shall extend and coil 5.0 meters of cable in manhole #25. All cables shall be tagged shall be tagged with circuit numbers as shown.

(1) (2) See sheet E-74 for Equipment Schedule.

NOTES:

1. The Contractor shall provide nameplates and circuit schedules as shown.
2. Deleted. (1)
3. References:
   - For LVCC-B single line diagram, see sheets E-32 thru E-34.
   - For circuit and conduit/cable tray schedules, see sheets starting at E-401.
   - For pull box schedule, see sheet E-169.

REGISTERED PROFESSIONAL ENGINEER FADI WALIEDDINE No. 11465 Exp. 12/31/2009 ELECTRICAL STATE OF CALIFORNIA

FOR REVISION ONLY (1)

REQUEST FOR INFORMATION NOT ADDRESSED IN THIS CCO REMAIN IN FORCE

MARK	DATE	DESCRIPTIONS	BY	CH'D	CCO#
(1)	03/30/09	SERVICE PLATFORM ELECTRICAL CHANGES	RR MP	RG FW	55

REVISIONS

CONTRACT CHANGE ORDER NO._____
SHEET _____ OF _____

DETAILS
SAS SUPERSTRUCTURE ROADWAY EASTBOUND PANEL UP-207 SCHEDULE
NO SCALE

E-153

STATE OF CALIFORNIA - DEPARTMENT OF TRANSPORTATION
Caltrans

DESIGN OVERSIGHT
BEHZAD GOLEMOHAMMADI

CALCULATED/DESIGNED BY JP
CHECKED BY BL
DATE 7/01 12/01
REVISED BY
DATE REVISED

LAST REVISION 00-00-00
DATE PLOTTED => 4/3/2009
TIME PLOTTED => 9:09:23 AM

FOR REDUCED PLANS ORIGINAL SCALE IS IN MILLIMETERS 0 20 40 60 80

DGN FILE =>T:\13103\MS\pse\SAS Struc\CCO\SAS CCO55\2009-03-30_Issued for Submittal\04-0120f1_0202R01.dgn
USERNAME =>garciar

CU 04251 EA 0120F1

DIST	COUNTY	ROUTE	KILOMETER POST TOTAL PROJECT	SHEET No	TOTAL SHEETS
04	SF	80	13.2/13.9	203 R2	1204

REGISTERED ELECTRICAL ENGINEER 12/19/02 DATE

12-6-04
PLANS APPROVAL DATE

REGISTERED PROFESSIONAL ENGINEER JENS ERLINGSSON No. 8249 Exp. 9/30/06 ELECTRICAL STATE OF CALIFORNIA

PB POWER, Inc.
A Parsons Brinckerhoff Company
303 Second St., Suite 700N
San Francisco, CA 94107-1317

The State of California or its officers or agents shall not be responsible for the accuracy or completeness of electronic copies of this plan sheet.

Caltrans now has a web site! To get to the web site, go to http://www.dot.ca.gov

Caltrans Metric

UTILITY PANEL UP-208 (CKT #2099)

Location: SAS SUPERSTRUCTURE SERVICE PLATFORM #8

LOAD DESCRIPTION	LTG	REC	OTH.	CB		CB	LTG	REC	OTH.	LOAD DESCRIPTION
Recept (3) Eastbound North Barrier		540		20/1	1 A 2	20/1			10	CB-243A
Spare				20/1	3 B 4	20/1			10	CB-243B
Recept (2) Service Platform #8		360		20/1	5 C 6	20/1			20	CB-243C,CB-244C
Recept (3) Girder		540		20/1	7 A 8	20/1	984			Girder Lighting (24)
RTU-#11E (PLC Power Supply)			100	20/1	9 B 10	20/1	697			Girder Lighting (17)
RTU-#11E (Lighting & Receptacle)	105	180	150	20/1	11 C 12	20/1				Spare
Spare				20/1	13 A 14	20/1				Spare
Navigation Relay Cabinet # NAP-8			600	20/1	15 B 16	20/1				Spare
Spare				20/1	17 C 18	20/1				
				20/1	19 A 20	20/1				
				20/1	21 B 22	20/1				
				20/1	23 C 24	20/1				
TOTAL VA	105	1620	850				1681		40	TOTAL VA

LOAD SUMMARY (INCLUDES .90 PF) (VA)

Lighting (At 100%): 1786
Gen Use (1st 10 kVA at 100% Plus 50% of remainder): 2,530

TOTAL kVA: 4.296

BALANCE (kVA)

Phase A - 2.074
Phase B - 1.407
Phase C - 0.815

VOLTAGE: 208Y/120 V
PHASE/WIRES: 3-phase, 4-wire
BUS RATING: 100 A
MAIN: MAIN LUGS ONLY 2
MOUNTING: Surface
K.A.I.C.: 10

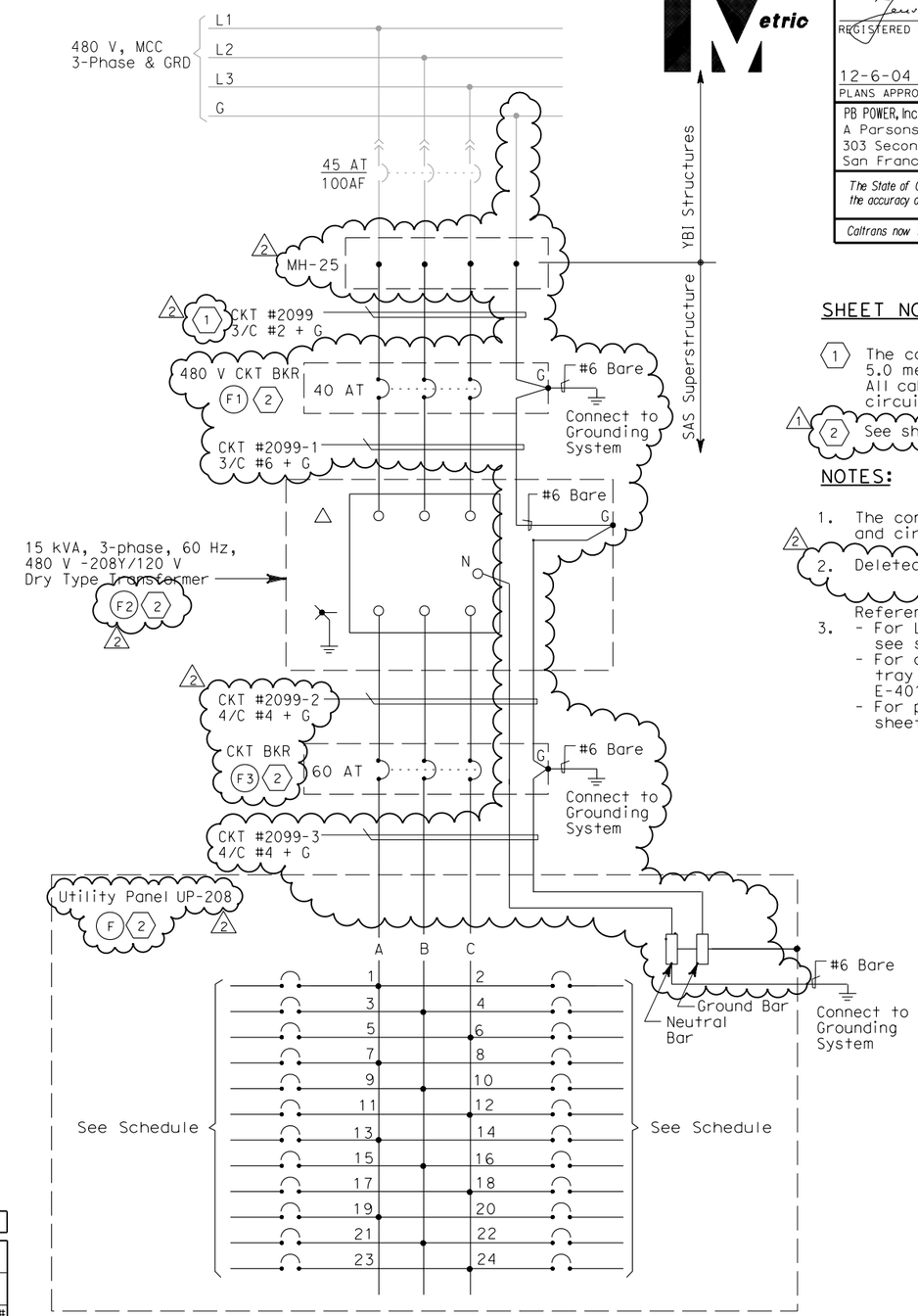

SHEET NOTES:

1. The contractor shall extend and coil 5.0 meters of cable in manhole 25 All cables shall be tagged with circuit numbers as shown.
2. See sheet E-75 for Equipment Schedule.

NOTES:

1. The contractor shall provide nameplates and circuit schedules as shown.
2. Deleted.

References:
3. - For LVCC-B single line diagram, see sheets E-32 thru E-34.
   - For circuit and conduit/cable tray schedules, see sheets starting at E-401.
   - For pull box schedule, see sheet E-169.

REGISTERED PROFESSIONAL ENGINEER S. A. ESTOQUE, JR. No. E-10151 Exp. 12/31/2008 ELECTRICAL STATE OF CALIFORNIA

FOR REVISION ONLY 1

REGISTERED PROFESSIONAL ENGINEER FADI WALIEDDINE No. 11465 Exp. 12/31/2009 ELECTRICAL STATE OF CALIFORNIA

FOR REVISION ONLY 2

REQUEST FOR INFORMATION NOT ADDRESSED IN THIS CCO REMAIN IN FORCE

MARK	DATE	DESCRIPTIONS	BY	CH'D	CCO#
2	03/30/09	SERVICE PLATFORM ELECTRICAL CHANGES	RR MP	RG FW	55
1	03/04/08	BARRIER MODIFICATIONS	JS BM	RG SE	44

REVISIONS

CONTRACT CHANGE ORDER NO._____
SHEET _____ OF _____

THIS PLAN IS ACCURATE FOR ELECTRICAL WORK ONLY.

DETAILS
SAS SUPERSTRUCTURE ROADWAY EASTBOUND PANEL UP-208 SCHEDULE
NO SCALE

E-154

EJL	2/04	REVISED BY	DATE REVISED
JP	BL	DATE 8/01	12/01
CALCULATED/DESIGNED BY	CHECKED BY		

DESIGN OVERSIGHT
BEHZAD GOLEMOHAMMADI

STATE OF CALIFORNIA - DEPARTMENT OF TRANSPORTATION
Caltrans

LAST REVISION 00-00-00
DATE PLOTTED => 4/3/2009
TIME PLOTTED => 9:05:21 AM

FOR REDUCED PLANS ORIGINAL SCALE IS IN MILLIMETERS 0 20 40 60 80

DGN FILE =>T:\13103\MS\pse\SAS Struc\CCO\SAS CC055\2009-03-30_Issued for Submittal\04-0120f1_0203R02.dgn
USERNAME =>garciar
CU 04251
EA 0120F1

DIST	COUNTY	ROUTE	KILOMETER POST TOTAL PROJECT	SHEET No	TOTAL SHEETS
04	SF	80	13.2/13.9	204 R1	1204

REGISTERED ELECTRICAL ENGINEER 12/19/02 DATE

12-6-04
PLANS APPROVAL DATE

REGISTERED PROFESSIONAL ENGINEER JENS ERLINGSSON No. 8249 Exp. 9/30/06 ELECTRICAL STATE OF CALIFORNIA

PB POWER, Inc.
A Parsons Brinckerhoff Company
303 Second St., Suite 700N
San Francisco, CA 94107-1317

The State of California or its officers or agents shall not be responsible for the accuracy or completeness of electronic copies of this plan sheet.

Caltrans now has a web site! To get to the web site, go to http://www.dot.ca.gov

Caltrans Metric

LIGHTING PANEL LP-219 (CKT #2103)

LOCATION: SAS SUPERSTRUCTURE SERVICE PLATFORM #4

LOAD DESCRIPTION	LTG	CB		CB	LTG	LOAD DESCRIPTION
Spare		20/1	1 A 2	20/1	298	Bike Path LTG (4) Belvedere (2)
		20/1	3 B 4	20/1	298	Bike Path LTG (4) Belvedere (2)
		20/1	5 C 6	20/1	216	Bike Path LTG (4)
		20/1	7 A 8	20/1	216	Bike Path LTG (4)
		20/1	9 B 10	20/1		Spare
		20/1	11 C 12	20/1		
TOTAL VA					1,028	TOTAL VA

LOAD SUMMARY (INCLUDES .90 PF) (VA)
LIGHTING (AT 100%): 1,028

TOTAL kVA: 1.028

BALANCE (kVA)
Phase A 0.514
Phase B 0.298
Phase C 0.216 (1)

VOLTAGE: 208/120 V
PHASE/WIRES: 3-phase, 4-wire
BUS ~~RATING: 100 A~~
MAIN: MAIN LUGS ONLY (1)
MOUNTING: ~~Surface~~
K.A.I.C.: 10

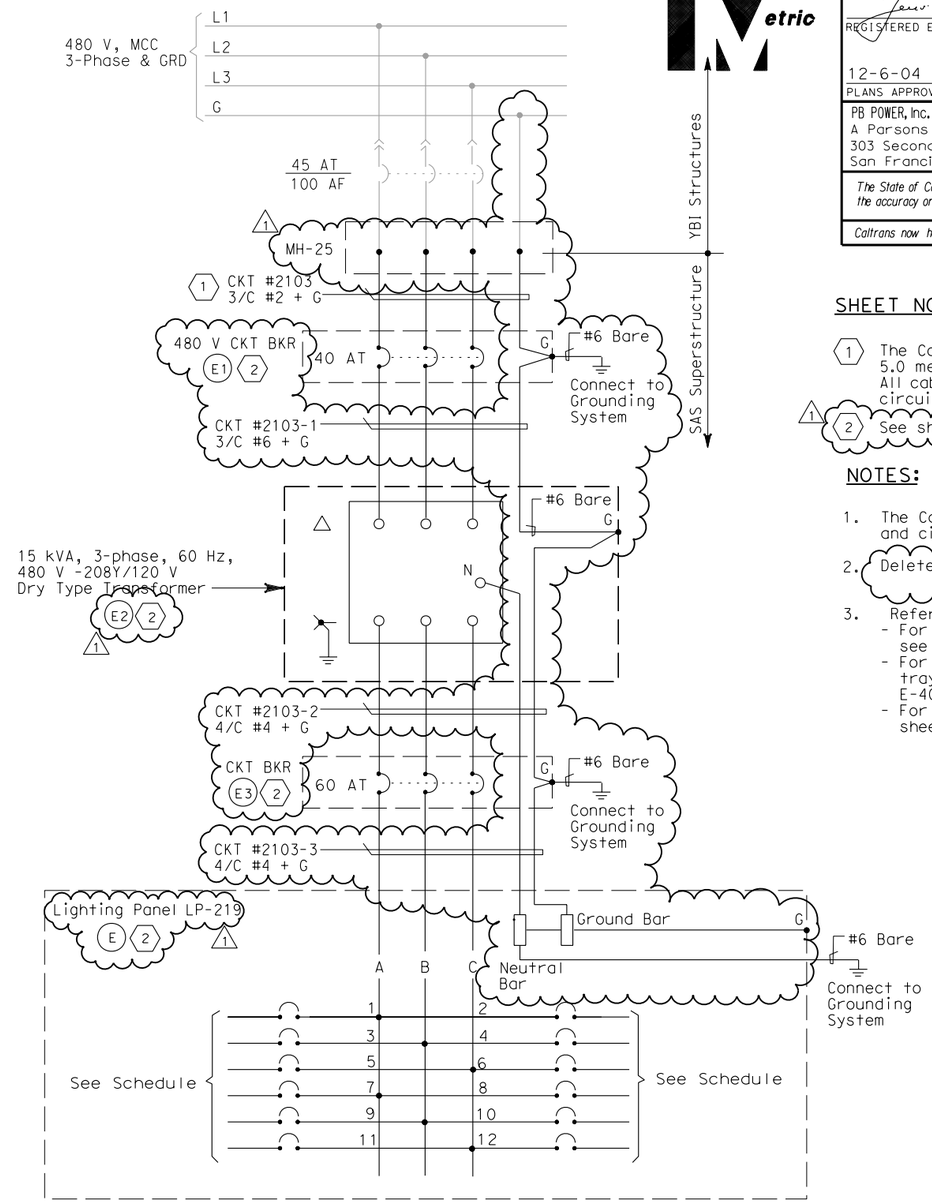

SHEET NOTES:

(1) The Contractor shall extend and coil 5.0 meters of cable in M.H.#25 All cables shall be tagged with circuit numbers as shown.

(1) (2) See sheet E-71 for Equipment Schedule.

NOTES:

1. The Contractor shall provide nameplates and circuit schedules as shown.
2. Deleted (1)
3. References:
   - For LVCC-A single line diagram, see sheets E-29 thru E-31.
   - For circuit and conduit/cable tray schedules, see sheets starting at E-401.
   - For pull box schedule, see sheet E-169.

REGISTERED PROFESSIONAL ENGINEER FADI WALIEDDINE No. 11465 Exp. 12/31/2009 ELECTRICAL STATE OF CALIFORNIA

FOR REVISION ONLY (1)

REQUEST FOR INFORMATION NOT ADDRESSED IN THIS CCO REMAIN IN FORCE

MARK	DATE	DESCRIPTIONS	BY	CH'D	CCO#
(1)	03/30/09	SERVICE PLATFORM ELECTRICAL CHANGES	RR MP	RG FW	55

REVISIONS

CONTRACT CHANGE ORDER NO._____
SHEET _____ OF _____

DETAILS
SAS SUPERSTRUCTURE ROADWAY EASTBOUND PANEL LP-219 SCHEDULE
NO SCALE

E-155

STATE OF CALIFORNIA - DEPARTMENT OF TRANSPORTATION
Caltrans

DESIGN OVERSIGHT: BEHZAD GOLEMOHAMMADI

CALCULATED/DESIGNED BY: JP — CHECKED BY: BL

DATE 09/01 — REVISED BY — DATE 11/01 — REVISED

LAST REVISION 00-00-00

DATE PLOTTED => 3/31/2009
TIME PLOTTED => 2:43:10 PM

FOR REDUCED PLANS ORIGINAL SCALE IS IN MILLIMETERS 0 20 40 60 80

DGN FILE =>T:\13103\MS\pse\SAS Struc\CCO\SAS CCO55\04-0120f1_0204R01.dgn
USERNAME =>garciar

CU 04251

EA 0120F1

DIST	COUNTY	ROUTE	KILOMETER POST TOTAL PROJECT	SHEET No	TOTAL SHEETS
04	SF	80	13.2/13.9	205 R1	1204

REGISTERED ELECTRICAL ENGINEER — 12/19/02 DATE

12-6-04
PLANS APPROVAL DATE

REGISTERED PROFESSIONAL ENGINEER — JENS ERLINGSSON No. 8249 Exp. 9/30/06 ELECTRICAL — STATE OF CALIFORNIA

PB POWER, Inc.
A Parsons Brinckerhoff Company
303 Second St., Suite 700N
San Francisco, CA 94107-1317

The State of California or its officers or agents shall not be responsible for the accuracy or completeness of electronic copies of this plan sheet.

Caltrans now has a web site! To get to the web site, go to http://www.dot.ca.gov

LIGHTING PANEL LP-220 (CKT #2104)

LOCATION: SAS SUPERSTRUCTURE SERVICE PLATFORM #5

LOAD DESCRIPTION	LTG	CB		CB	LTG	LOAD DESCRIPTION
Spare		20/1	1 A 2	20/1	270	Bike Path LTG (5)
		20/1	3 B 4	20/1	270	Bike Path LTG (5)
		20/1	5 C 6	20/1	270	Bike Path LTG (5)
		20/1	7 A 8	20/1	270	Bike Path LTG (5)
		20/1	9 B 10	20/1		Spare
		20/1	11 C 12	20/1		
TOTAL VA					1,080	TOTAL VA

LOAD SUMMARY (INCLUDES .90 PF) (VA)
LIGHTING (AT 100%): 1,080

BALANCE (kVA)
Phase A - 0.540
Phase B - 0.270
Phase C - 0.270

VOLTAGE: 208/120 V
PHASE/WIRES: 3-phase, 4-wire
BUS ~~RATING: 100 A~~
MAINS: Main Lugs Only
MOUNTING: ~~Surface~~ 1
K.A.I.C.: 10

TOTAL kVA: 1.080

LIGHTING PANEL LP-221 (CKT #2105)

LOCATION: SAS SUPERSTRUCTURE SERVICE PLATFORM #6

LOAD DESCRIPTION	LTG	CB		CB	LTG	LOAD DESCRIPTION
Spare		20/1	1 A 2	20/1	216	Bike Path LTG (4)
		20/1	3 B 4	20/1	216	Bike Path LTG (4)
		20/1	5 C 6	20/1	378	Bike Path LTG (7)
		20/1	7 A 8	20/1	378	Bike Path LTG (7)
		20/1	9 B 10	20/1		Spare
		20/1	11 C 12	20/1		
TOTAL VA					1188	TOTAL VA

LOAD SUMMARY (INCLUDES .90 PF) (VA)
LIGHTING (AT 100%): 1188

BALANCE (kVA)
Phase A - 0.594
Phase B - 0.216
Phase C - 0.378

VOLTAGE: 208/120 V
PHASE/WIRES: 3-phase, 4-wire
BUS ~~RATING: 100 A~~
MAINS: Main Lugs Only
MOUNTING: ~~Surface~~ 1
K.A.I.C.: 10

TOTAL kVA: 1.188

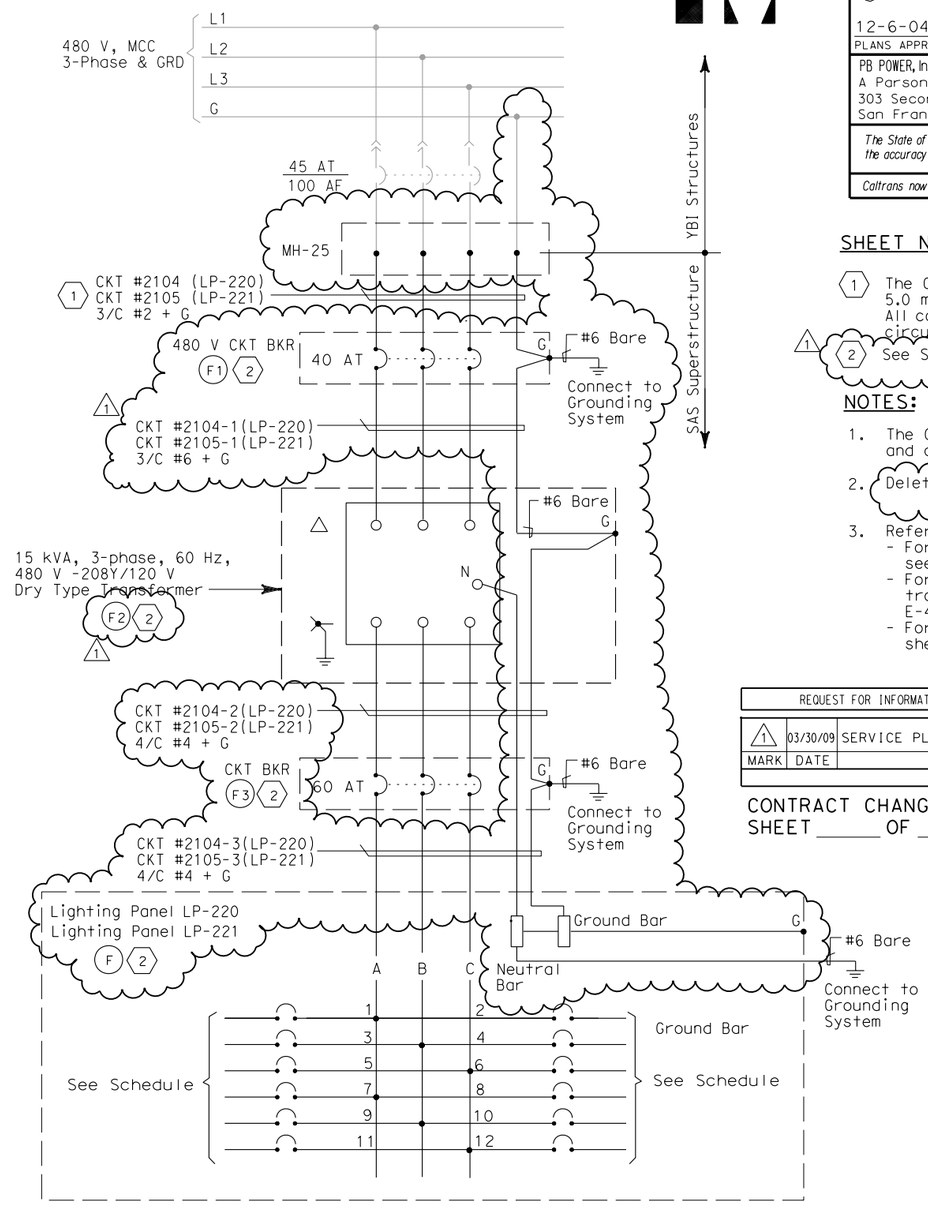

SHEET NOTES:

1. The Contractor shall extend and coil 5.0 meters of cable in M.H.#25 All cables shall be tagged with circuit numbers as shown.
2. See Sheets E-72 for Equipment Schedule. 1

NOTES:

1. The Contractor shall provide nameplates and circuit schedules as shown.
2. Deleted 1
3. References:
   - For LVCC-B single line diagram, see sheets E-32 thru E-34.
   - For circuit and conduit/cable tray schedules, see sheets starting at E-401.
   - For pull box schedule, see sheet E-169.

REQUEST FOR INFORMATION NOT ADDRESSED IN THIS CCO REMAIN IN FORCE

MARK	DATE	DESCRIPTIONS	BY	CH'D	CCO#
1	03/30/09	SERVICE PLATFORM ELECTRICAL CHANGES	RR	RG FW	55

REVISIONS

CONTRACT CHANGE ORDER NO. _____
SHEET _____ OF _____

REGISTERED PROFESSIONAL ENGINEER — FADI WALIEDDINE No. 11465 Exp. 12/31/2009 ELECTRICAL — STATE OF CALIFORNIA

FOR REVISION ONLY 1

DETAILS
SAS SUPERSTRUCTURE ROADWAY EASTBOUND PANEL LP-220 AND LP-221 SCHEDULES
NO SCALE

E-156

DATE	REVISED BY	DATE	REVISED BY
09/01	JP	11/01	BL

CALCULATED/DESIGNED BY — CHECKED BY

DESIGN OVERSIGHT — BEHZAD GOLEMOHAMMADI

STATE OF CALIFORNIA - DEPARTMENT OF TRANSPORTATION — Caltrans

LAST REVISION 00-00-00 — DATE PLOTTED => 3/31/2009 TIME PLOTTED => 2:42:39 PM

FOR REDUCED PLANS ORIGINAL SCALE IS IN MILLIMETERS 0 20 40 60 80

DGN FILE =>T:\13103\MS\pse\SAS Struc\CCO\SAS CCO55\04-0120f1_0205R01.dgn
USERNAME =>garciar

CU 04251 — EA 0120F1

DIST	COUNTY	ROUTE	KILOMETER POST TOTAL PROJECT	SHEET No	TOTAL SHEETS
04	SF	80	13.2/13.9	206 R1	1204

REGISTERED ELECTRICAL ENGINEER 12/19/02 DATE

12-6-04
PLANS APPROVAL DATE

REGISTERED PROFESSIONAL ENGINEER JENS ERLINGSSON No. 8249 Exp. 9/30/06 ELECTRICAL STATE OF CALIFORNIA

PB POWER, Inc.
A Parsons Brinckerhoff Company
303 Second St., Suite 700N
San Francisco, CA 94107-1317

The State of California or its officers or agents shall not be responsible for the accuracy or completeness of electronic copies of this plan sheet.

Caltrans now has a web site! To get to the web site, go to http://www.dot.ca.gov

Caltrans Metric

LIGHTING PANEL LP-222 (CKT #2106)

LOCATION: SAS SUPERSTRUCTURE SERVICE PLATFORM #7

LOAD DESCRIPTION	LTG	CB		CB	LTG	LOAD DESCRIPTION
Spare		20/1	1 A 2	20/1	432	Bike Path LTG (8)
		20/1	3 B 4	20/1	432	Bike Path LTG (8)
		20/1	5 C 6	20/1	378	Bike Path LTG (7)
		20/1	7 A 8	20/1	378	Bike Path LTG (7)
		20/1	9 B 10	20/1		Spare
		20/1	11 C 12	20/1		
TOTAL VA					1620	TOTAL VA

LOAD SUMMARY (INCLUDES .90 PF) (VA)
LIGHTING (AT 100%): 1620

TOTAL kVA: 1.620

BALANCE (kVA)
Phase A - 0.810
Phase B - 0.432
Phase C - 0.378

VOLTAGE: 208/120 V
PHASE/WIRES: 3-phase, 4-wire
BUS ~~RATING: 100 A~~
MAIN: MAIN LUGS ONLY 1
MOUNTING: Surface
K.A.I.C.: 10

LIGHTING PANEL LP-223 (CKT #2107)

LOCATION: SAS SUPERSTRUCTURE SERVICE PLATFORM #8

LOAD DESCRIPTION	LTG	CB		CB	LTG	LOAD DESCRIPTION
Spare		20/1	1 A 2	20/1	432	Bike Path LTG (8)
		20/1	3 B 4	20/1	432	Bike Path LTG (8)
		20/1	5 C 6	20/1	460	Bike Path LTG (7) Belvedere (2)
		20/1	7 A 8	20/1	460	Bike Path LTG (7) Belvedere (2)
		20/1	9 B 10	20/1		Spare
		20/1	11 C 12	20/1		
TOTAL VA					1,784	TOTAL VA

LOAD SUMMARY (INCLUDES .90 PF) (VA)
LIGHTING (AT 100%): 1,784

TOTAL kVA: 1.784

BALANCE (kVA)
Phase A - 0.892
Phase B - 0.432
Phase C - 0.460

VOLTAGE: 208/120 V
PHASE/WIRES: 3-phase, 4-wire
BUS ~~RATING: 100 A~~
MAIN: Main Lugs Only 1
MOUNTING: Surface
K.A.I.C.: 10

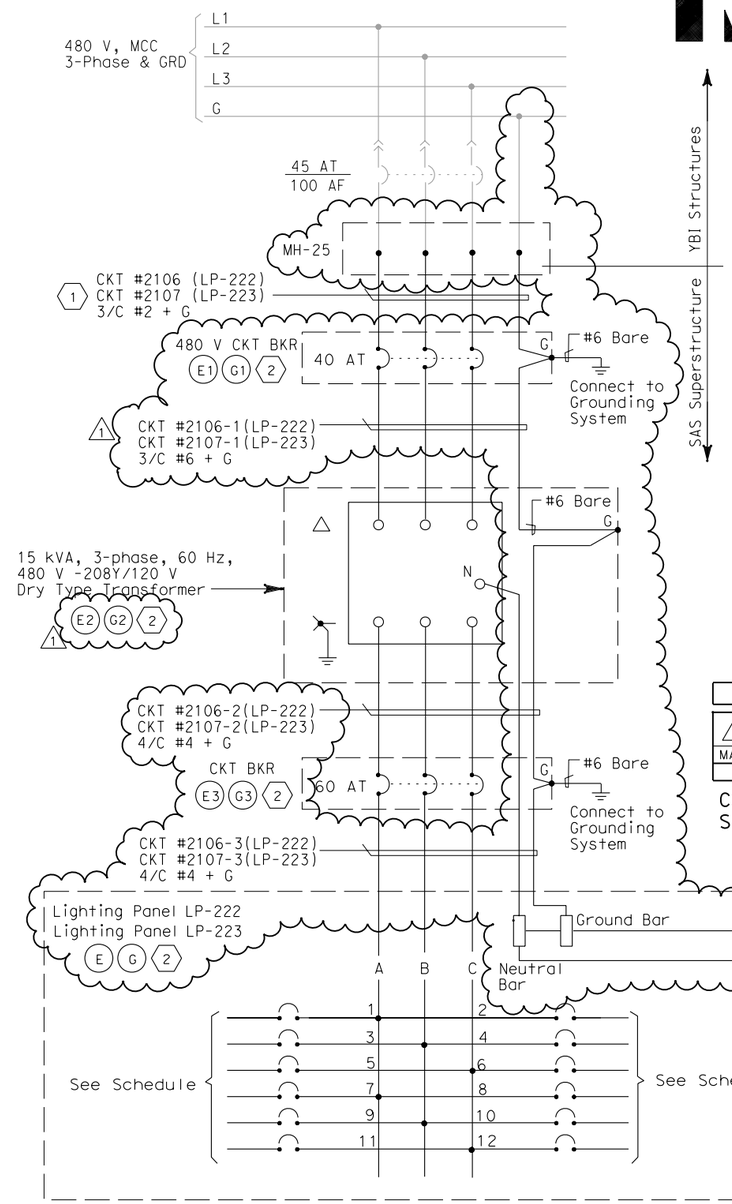

SHEET NOTES:

1. The Contractor shall extend and coil 5.0 meters of cable in manhole 25 All cables shall be tagged with circuit numbers as shown.
2. See Sheets E-74 & E-75 for Equipment Schedule. 1

NOTES:

1. The Contractor shall provide nameplates and circuit schedules as shown.
2. Deleted 1
3. References:
   - For LVCC-B single line diagram, see sheets E-32 thru E-34.
   - For circuit and conduit/cable tray schedules, see sheets starting at E-401.
   - For pull box schedule, see sheet E-169.

REQUEST FOR INFORMATION NOT ADDRESSED IN THIS CCO REMAIN IN FORCE

MARK	DATE	DESCRIPTIONS	BY	CH'D	CCO#
1	03/30/09	SERVICE PLATFORM ELECTRICAL CHANGES	RR	RG FW	55

REVISIONS

CONTRACT CHANGE ORDER NO._____
SHEET _____ OF _____

REGISTERED PROFESSIONAL ENGINEER FADI WALIEDDINE No. 11465 Exp. 12/31/2009 ELECTRICAL STATE OF CALIFORNIA

FOR REVISION ONLY 1

DETAILS
SAS SUPERSTRUCTURE ROADWAY EASTBOUND PANEL LP-222 AND LP-223 SCHEDULES
NO SCALE

E-157

REVISED BY	DATE REVISED
JP	BL

DATE 09/01 11/01

CALCULATED/DESIGNED BY
CHECKED BY

DESIGN OVERSIGHT
BEHZAD GOLEMOHAMMADI

STATE OF CALIFORNIA - DEPARTMENT OF TRANSPORTATION
Caltrans

LAST REVISION 00-00-00
DATE PLOTTED => 4/3/2009
TIME PLOTTED => 7:35:02 AM

DIST	COUNTY	ROUTE	KILOMETER POST TOTAL PROJECT	SHEET No	TOTAL SHEETS
04	SF	80	13.2/13.9	212 R3	1204

REGISTERED ELECTRICAL ENGINEER 12/19/02 DATE

12-6-04
PLANS APPROVAL DATE

REGISTERED PROFESSIONAL ENGINEER JENS ERLINGSSON No. 8249 Exp. 9/30/06 ELECTRICAL STATE OF CALIFORNIA

PB POWER, Inc.
A Parsons Brinckerhoff Company
303 Second St., Suite 700N
San Francisco, CA 94107-1317

The State of California or its officers or agents shall not be responsible for the accuracy or completeness of electronic copies of this plan sheet.

Caltrans now has a web site! To get to the web site, go to http://www.dot.ca.gov

PULL BOXES

Location	Type	Pull Box Size	Enclosure Type	Nameplate Pull Box Cover	Remarks
Roadway Barrier	PB-Com			Low Voltage - Call Box	Caltrans standard ES-9C (PB-9A)
Roadway Barrier	PB-Ltg			600 V - Electrical	Caltrans standard ES-9C (PB-9)
Roadway and miscellaneous	PB-1B	304 L x 254 W x 127 D	NEMA 4X	600 V - Electrical	Located at main suspender cable
Roadway and miscellaneous	PB-1C	152 L x 152 W x 102 D	NEMA 4X	600 V - Electrical	Located at suspender brackets
Bike Path	PB-1D	152 L x 203 W x 102 D	NEMA 4X	600 V - Electrical	
Bike Path	PB-1E	305 L x 254 W x 152 D	NEMA 4X	600 V - Electrical	
Roadway	PB-1F	304 L x 304 W x 152 D	NEMA 4X	600 V - Electrical	
Inside Girder Box	PB-2A	406 L x 254 W x 152 D	NEMA 12	600 V - Electrical	
Service Platform	PB-2B	762 L x 508 W x 203 D	NEMA 4X	600 V - Electrical	
Inside Girder Box	PB-2C	915 L x 610 W x 610 D	NEMA 12	600 V - Electrical	Electrical vault-embedded in conc. deck
Inside Girder Box	3 PB-2P	1067 L x 915 W x 305 D	NEMA 12	600 V - Electrical	Electrical vault-surface/pendant mounted
Inside Girder Box	PB-2L	152 L x 152 W x 102 D	NEMA 12	600 V - Electrical	For future light pipe
		3			

SPLICE BOXES

Location	Type	Splice Box Size	Enclosure Type	Nameplate Splice Box Cover	Remarks
Inside Girder Box	PB-3A	1830 L x 915 W x 305 D	NEMA 12	Danger - High Voltage - Keep Out	
Inside Girder Box	PB-3B	813 L x 203 diameter	Cylindrical Housing	Fiber Optic	72 fibers to 12 fibers
Inside Girder Box	PB-3C	813 L x 203 diameter	Cylindrical Housing	Fiber Optic	72 fibers to 72 fibers

PANEL ENCLOSURES (1)

Location	Type	Cabinet/Terminal Box Size	Enclosure Type	Nameplate Cabinet/Terminal Cover	Remarks
Service Platform	PB-6C	See Panel Layout	NEMA 4X	See Panel Layout on E-305	For Navigation Relay Cabinet
			3		
3 Service Platform	PB-7B	3 See Panel Layout	NEMA 4X	See Panel Layout on E-321	For Scada Communication Terminal Box
Service Platform	PB-7C	762 H x 508 W x 203 D	NEMA 4X	Caltrans Telephone	Enclosure only - For Telephone Terminal Box
3 Inside Girder Box	PB-7D		NEMA 12	Caltrans Telephone	Enclosure only - For Telephone Terminal Box
		DELETED			DELETED

SAS SUPERSTRUCTURE EB

Location	Type	Pull Box Size	Enclosure Type	Nameplate Pull Box Cover	Remarks
Inside Light Pole	PB-2N	152 L x 152 W x 102 D	NEMA 12	TOS-MVDS	Cable Termination
Tower Platform	PB-2M	305 L x 305 W x 152 D	NEMA 12	TOS-MVDS	Cable Termination

REGISTERED PROFESSIONAL ENGINEER MANNELL FUMIO TAKAKI No. E 8651 Exp. 9/30/2008 ELECTRICAL STATE OF CALIFORNIA

FOR REVISION ONLY
1

REGISTERED PROFESSIONAL ENGINEER FADI WALIEDDINE No. 11465 Exp. 12/31/2009 ELECTRICAL STATE OF CALIFORNIA

FOR REVISION ONLY
2 3

REQUEST FOR INFORMATION NOT ADDRESSED IN THIS CCO REMAIN IN FORCE

MARK	DATE	DESCRIPTIONS	BY	CH'D	CCO#
3	03/30/09	SERVICE PLATFORM ELECTRICAL CHANGES	RR	RG FW	55
2	09/24/08	CABLE ELECTRICAL	RY AG	RG FW	72
1	02/19/08	ELECTRICAL MODIFICATIONS	MP EL	RR	42

REVISIONS

CONTRACT CHANGE ORDER NO._____
SHEET _____ OF _____

SHEET NOTE:

(1) Panel enclosures shall be provided with padlock provisions.

DETAILS
SAS SUPERSTRUCTURE ROADWAY EASTBOUND PULLBOX SCHEDULES
NO SCALE

E-169

CALCULATED/DESIGNED BY	JP	DATE 9/01	REVISED BY	DATE REVISED
CHECKED BY	BL	11/01		

DESIGN OVERSIGHT
BEHZAD GOLEMOHAMMADI

STATE OF CALIFORNIA - DEPARTMENT OF TRANSPORTATION
Caltrans

LAST REVISION 00-00-00
DATE PLOTTED => 3/31/2009
TIME PLOTTED => 2:41:02 PM

FOR REDUCED PLANS ORIGINAL SCALE IS IN MILLIMETERS 0 20 40 60 80

DGN FILE =>T:\13103\MS\pse\SAS Struc\CCO\SAS CC055\04-0120f1_0212R03.dgn
USERNAME =>garciar

CU 04251

EA 0120F1

DIST	COUNTY	ROUTE	KILOMETER POST TOTAL PROJECT	SHEET No	TOTAL SHEETS
04	SF	80	13.2/13.9	232 S1R1	1204

REGISTERED ELECTRICAL ENGINEER — DATE 2/22/08

PLANS APPROVAL DATE

REGISTERED PROFESSIONAL ENGINEER S. A. ESTOQUE, JR. No. E-10151 Exp. 12/31/2008 ELECTRICAL STATE OF CALIFORNIA

PB AMERICAS, Inc.
A Parsons Brinckerhoff Company
303 Second St., Suite 700N
San Francisco, CA 94107-1317

The State of California or its officers or agents shall not be responsible for the accuracy or completeness of electronic copies of this plan sheet.

Caltrans now has a web site! To get to the web site, go to http://www.dot.ca.gov

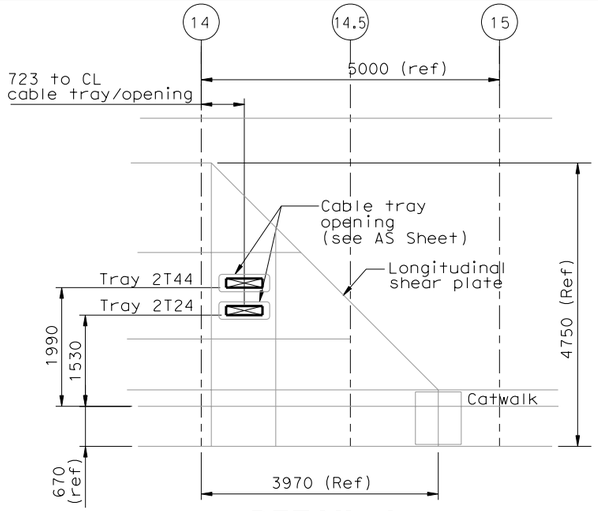

DETAIL 1
Cable pentration thru longitudinal shear plate
Scale 1:50

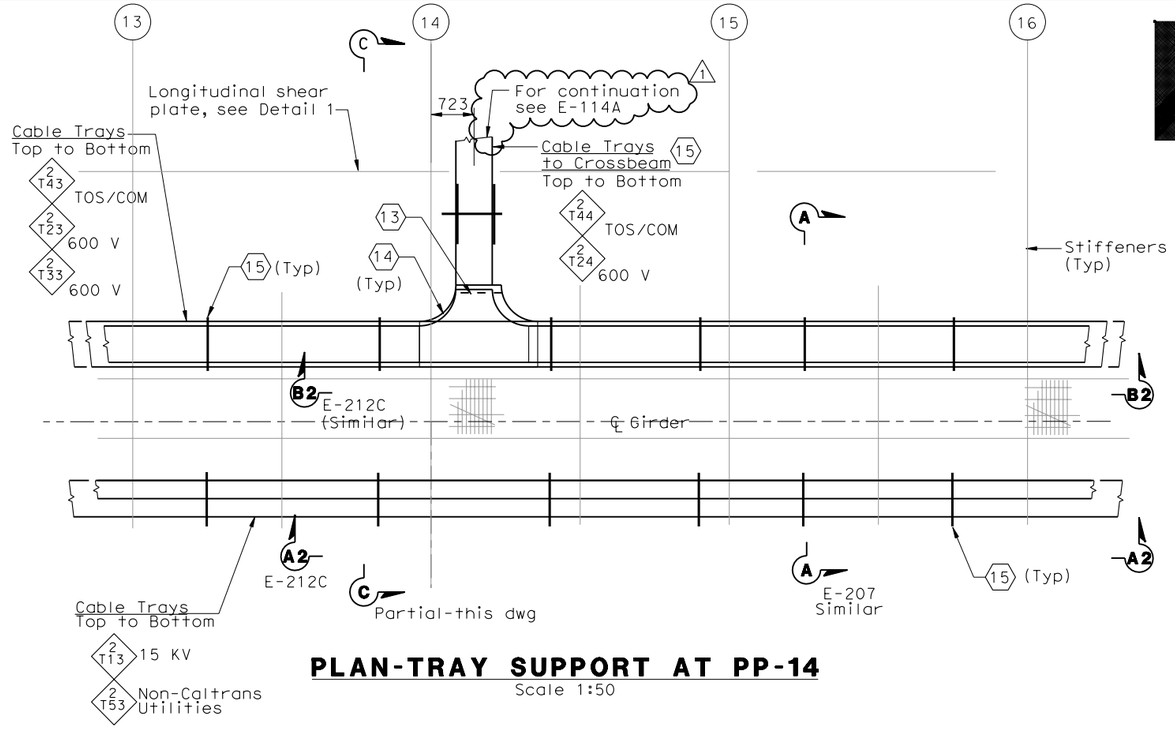

PLAN-TRAY SUPPORT AT PP-14
Scale 1:50

SHEET NOTES:

1. Type I, for cable tray supports details, see AS sheets.
2. Type II, for cable tray supports details, see AS sheets.
3. Type V, for cable tray supports details, see AS sheets.
4. Type VI, for cable tray supports details, see AS sheets.
5. The Contractor to provide cable tray support at each ends of cable tray fitting as required.
6. Type VII, for cable tray supports details, see AS sheets.
7. Type VIIA, for cable tray supports details, see AS sheets.
8. Type VIIB, for cable tray supports details, see AS sheets.
9. Deleted. (1)
10. Pull Box PB-2A shall be located on top of stiffener. The Contractor shall provide strut channel for support installed in field.
11. The Contractor shall provide strut channel on top of stiffener for conduit support and installed in field.
12. The Contractor to provide insulated grounding bushing at each end of the conduit.
13. The Contractor to provide secondary support installed in field, see detail 2 on dwg E-207D.
14. Cable tray tee fitting shall have 305 mm radius.
15. For cable tray support see AS-Sheets.

REQUEST FOR INFORMATION NOT ADDRESSED IN THIS CCO REMAIN IN FORCE					
1	03/30/09	SERVICE PLATFORM ELECTRICAL CHANGES	RG	FW	55
0	02/25/08	CABLE TRAY CHANGES	TW	RG SE	42S1
MARK	DATE	DESCRIPTIONS	BY	CH'D	CCO#
REVISIONS					

CONTRACT CHANGE ORDER NO._____
SHEET _____ OF _____

REGISTERED PROFESSIONAL ENGINEER FADI WALIEDDINE No. 11465 Exp. 12/31/2009 ELECTRICAL STATE OF CALIFORNIA

FOR REVISION ONLY (1)

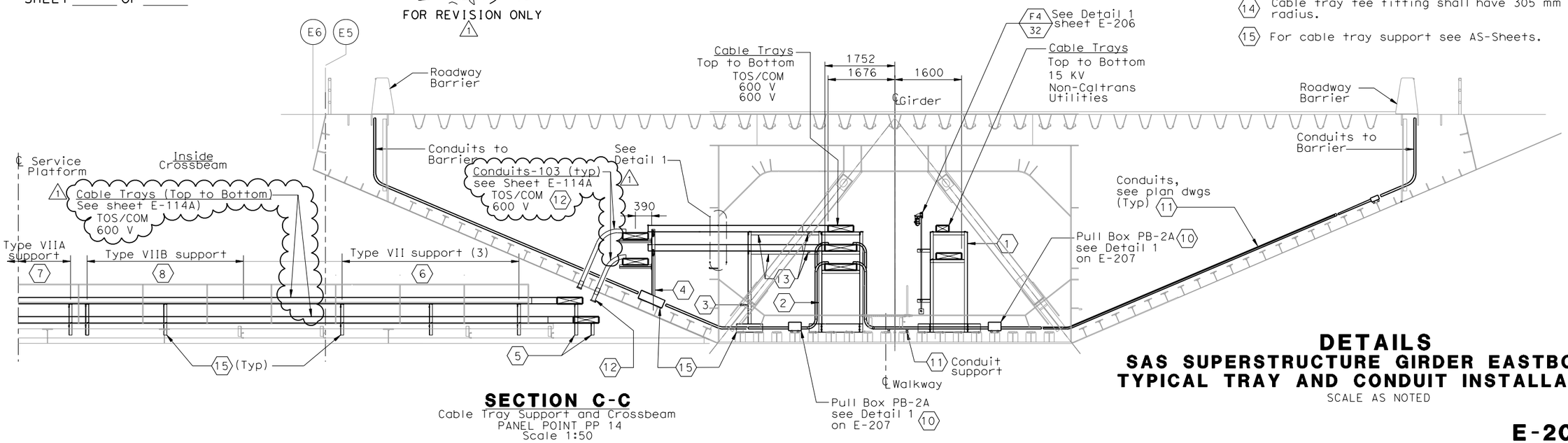

SECTION C-C
Cable Tray Support and Crossbeam
PANEL POINT PP 14
Scale 1:50

DETAILS
SAS SUPERSTRUCTURE GIRDER EASTBOUND TYPICAL TRAY AND CONDUIT INSTALLATION
SCALE AS NOTED

E-207A

THIS PLAN ACCURATE FOR ELECTRICAL WORK ONLY.

ALL DIMENSIONS ARE IN MILLIMETERS UNLESS OTHERWISE SHOWN.

FOR REDUCED PLANS ORIGINAL SCALE IS IN MILLIMETERS 0 20 40 60 80

DGN FILE =>T:\13103\MS\pse\SAS Struc\CCO\SAS CC055\04-0120f1_0232S01R01.dgn
USERNAME =>garciar

CU 04251 EA 0120F1

LAST REVISION 00-00-00 DATE PLOTTED => 3/31/2009 TIME PLOTTED => 2:40:27 PM

DESIGN OVERSIGHT BEHZAD GOLEMOHAMMADI

CALCULATED/DESIGNED BY CHECKED BY

DATE REVISED BY DATE REVISED

STATE OF CALIFORNIA - DEPARTMENT OF TRANSPORTATION

DIST	COUNTY	ROUTE	KILOMETER POST TOTAL PROJECT	SHEET No	TOTAL SHEETS
04	SF	80	13.2/13.9	232 S2R1	1204

REGISTERED ELECTRICAL ENGINEER — DATE 2/22/08

PLANS APPROVAL DATE

REGISTERED PROFESSIONAL ENGINEER S. A. ESTOQUE, JR. No. E-10151 Exp. 12/31/2008 ELECTRICAL STATE OF CALIFORNIA

PB AMERICAS, Inc.
A Parsons Brinckerhoff Company
303 Second St., Suite 700N
San Francisco, CA 94107-1317

The State of California or its officers or agents shall not be responsible for the accuracy or completeness of electronic copies of this plan sheet.

Caltrans now has a web site! To get to the web site, go to http://www.dot.ca.gov

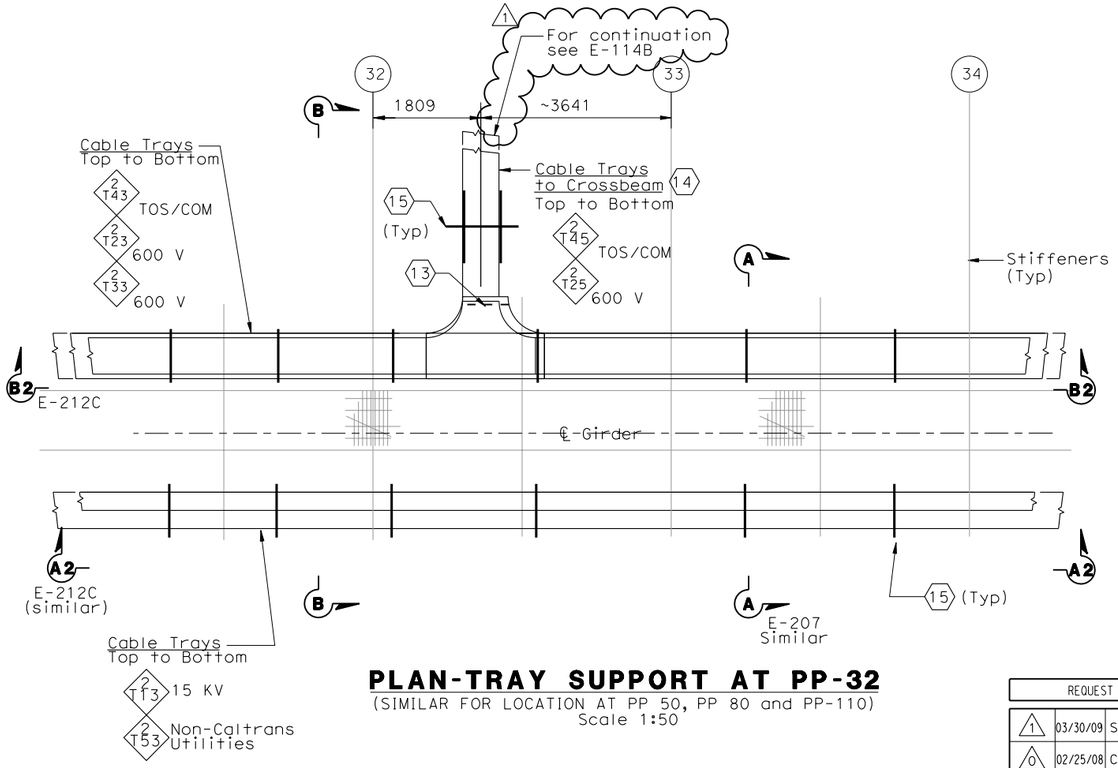

PLAN-TRAY SUPPORT AT PP-32

(SIMILAR FOR LOCATION AT PP 50, PP 80 and PP-110)
Scale 1:50

REGISTERED PROFESSIONAL ENGINEER FADI WALIEDDINE No. 11465 Exp. 12/31/2009 ELECTRICAL STATE OF CALIFORNIA

FOR REVISION ONLY

REQUEST FOR INFORMATION NOT ADDRESSED IN THIS CCO REMAIN IN FORCE

MARK	DATE	DESCRIPTIONS	BY	CH'D	CCO#
1	03/30/09	SERVICE PLATFORM ELECTRICAL CHANGES	RG	FW	55
0	02/25/08	CABLE TRAY CHANGES	TW	RG SE	42S1

REVISIONS

CONTRACT CHANGE ORDER NO. _____
SHEET _____ OF _____

SHEET NOTES:

1. Type I, for cable tray supports details, see AS sheets.
2. Type II, for cable tray supports details, see AS sheets.
3. Type V, for cable tray supports details, see AS sheets.
4. Type VI, for cable tray supports details, see AS sheets.
5. The Contractor to provide cable tray support at each ends of cable tray fitting as required.
6. Type VII, for cable tray supports details, see AS sheets.
7. Type VIIA, for cable tray supports details, see AS sheets.
8. Type VIIB, for cable tray supports details, see AS sheets.
9. Deleted.
10. Pull Box PB-2A shall be located on top of stiffener. The Contractor shall provide strut channel for support installed in field.
11. The Contractor shall provide strut channel on top of stiffener for conduit support and installed in field.
12. The Contractor to provide insulated grounding bushing at each end of the conduit.
13. The Contractor to provide secondary support installed in field, see Detail 3 on dwg. E-207D.
14. For cable tray numbers to PP 50, PP 80 and PP 110, see sheet E-114B.
15. For cable tray support see AS-Sheets.

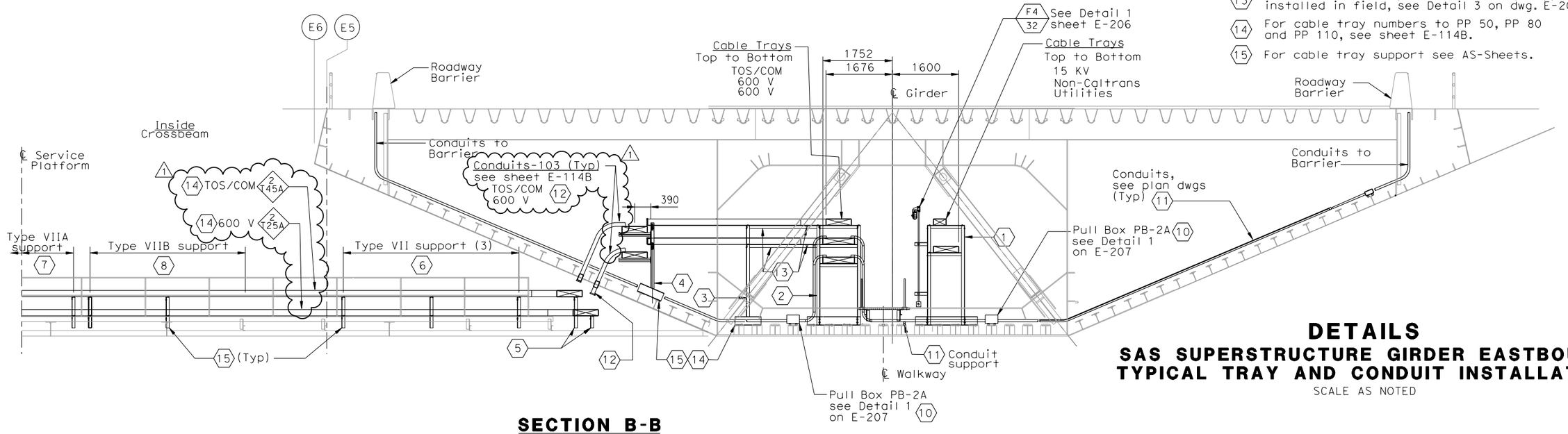

SECTION B-B

(Typical Cable Tray Support and Crossbeam)
PP 32, PP 50, PP 80 and PP-110
Scale 1:50

DETAILS

SAS SUPERSTRUCTURE GIRDER EASTBOUND TYPICAL TRAY AND CONDUIT INSTALLATION

SCALE AS NOTED

THIS PLAN ACCURATE FOR ELECTRICAL WORK ONLY.

ALL DIMENSIONS ARE IN MILLIMETERS UNLESS OTHERWISE SHOWN.

E-207B

DESIGN OVERSIGHT: BEHZAD GOLEMOHAMMADI

CALCULATED/DESIGNED BY | CHECKED BY | DATE | REVISED BY | DATE REVISED

STATE OF CALIFORNIA - DEPARTMENT OF TRANSPORTATION

Caltrans

FOR REDUCED PLANS ORIGINAL SCALE IS IN MILLIMETERS 0 20 40 60 80

DGN FILE =>T:\13103\MS\pse\SAS Struc\CCO\SAS CC055\04-0120f1_0232S02R01.dgn
USERNAME =>garciar

CU 04251 | EA 0120F1

LAST REVISION 00-00-00 | DATE PLOTTED => 3/31/2009 TIME PLOTTED => 2:39:56 PM

DIST	COUNTY	ROUTE	KILOMETER POST TOTAL PROJECT	SHEET No	TOTAL SHEETS
04	SF	80	13.2/13.9	271 S5	1204

REGISTERED ELECTRICAL ENGINEER DATE

PLANS APPROVAL DATE

REGISTERED PROFESSIONAL ENGINEER FADI WALIEDDINE No. 11465 Exp. 12/31/2009 ELECTRICAL STATE OF CALIFORNIA

PB AMERICAS, Inc.
A Parsons Brinckerhoff Company
303 Second St., Suite 700N
San Francisco, CA 94107-1317

The State of California or its officers or agents shall not be responsible for the accuracy or completeness of electronic copies of this plan sheet.

Caltrans now has a web site! To get to the web site, go to http://www.dot.ca.gov

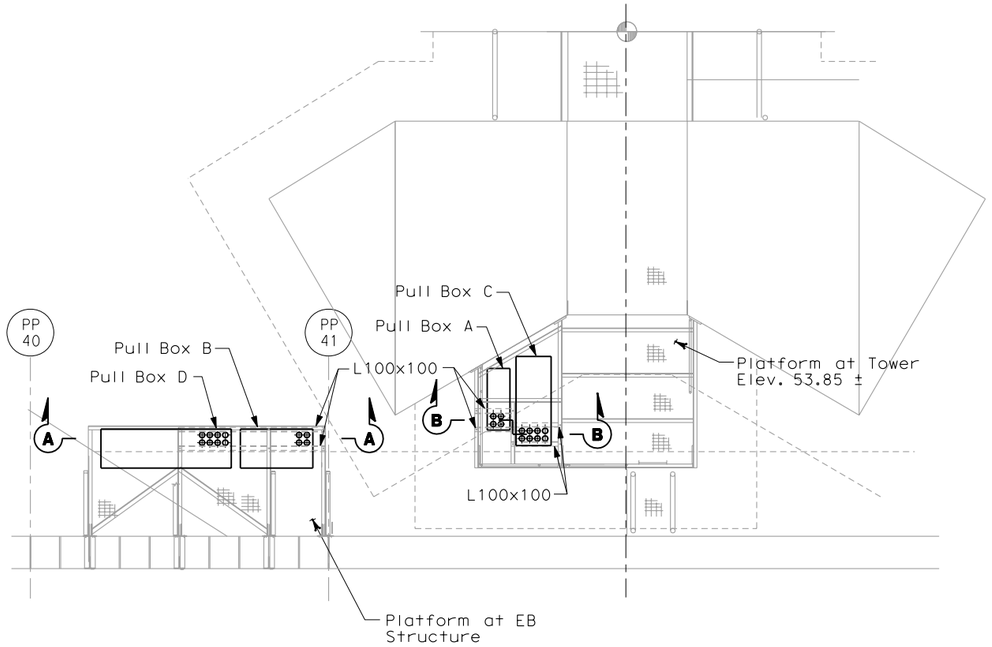

PLAN-PLATFORM AT ELEV 53.85

NO SCALE

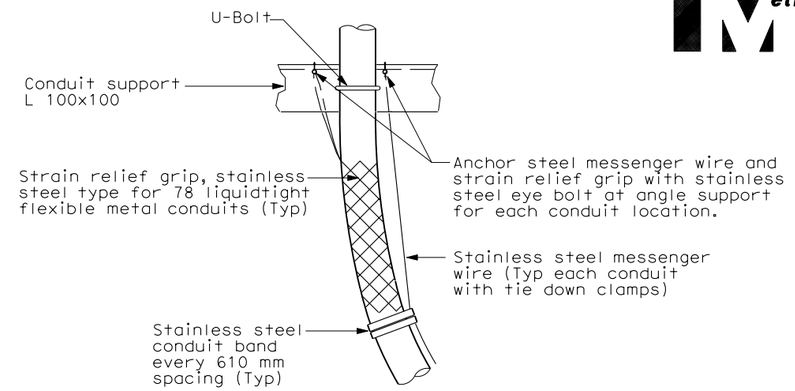

DETAIL 1

(TYPICAL)

NOTE:

1. For reference drawing see Sheet E-264A.

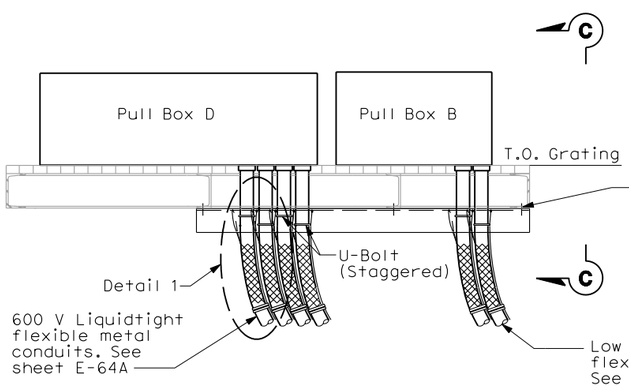

SECTION A-A

NO SCALE

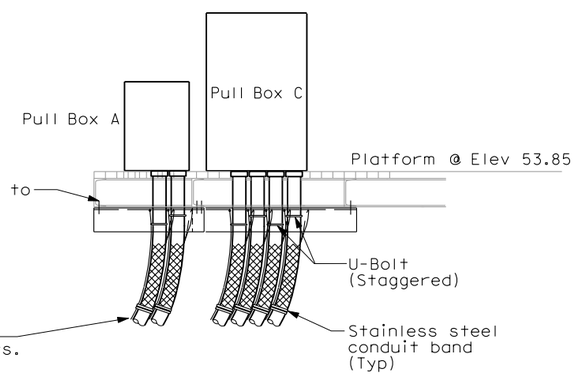

SECTION B-B

NO SCALE

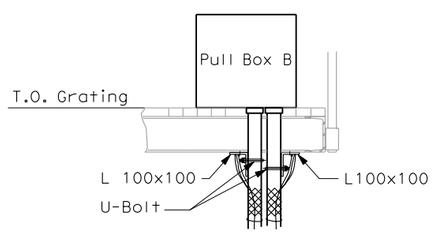

SECTION C-C

NO SCALE

REQUEST FOR INFORMATION NOT ADDRESSED IN THIS CCO REMAIN IN FORCE					
0	03/30/09	SERVICE PLATFORM ELECTRICAL CHANGES	RR RY	RG FW	55
MARK	DATE	DESCRIPTIONS	BY	CH'D	CCO#
REVISIONS					

CONTRACT CHANGE ORDER NO._____

SHEET_____ OF _____

DETAILS
TOWER AND SUSPENSION CABLE

NO SCALE

E-264F

THIS PLAN ACCURATE FOR ELECTRICAL WORK ONLY.

ALL DIMENSIONS ARE IN MILLIMETERS UNLESS OTHERWISE SHOWN.

DESIGN OVERSIGHT BEHZAD GOLEMOHAMMADI

STATE OF CALIFORNIA - DEPARTMENT OF TRANSPORTATION

Caltrans

DATE	REVISED BY	DATE	REVISED

CALCULATED/DESIGNED BY

CHECKED BY

LAST REVISION 00-00-00

DATE PLOTTED => 3/31/2009
TIME PLOTTED => 2:35:15 PM

FOR REDUCED PLANS ORIGINAL SCALE IS IN MILLIMETERS 0 20 40 60 80

DGN FILE =>T:\13103\MS\pse\SAS Struc\CCO\SAS CC055\04-0120f1_0271S05.dgn
USERNAME =>garciar

CU 04251

EA 0120F1

DIST	COUNTY	ROUTE	KILOMETER POST TOTAL PROJECT	SHEET No	TOTAL SHEETS
04	SF	80	13.2/13.9	308 R1	1204

Jens Erlingsson 12/19/02
REGISTERED ELECTRICAL ENGINEER DATE

12-6-04
PLANS APPROVAL DATE

REGISTERED PROFESSIONAL ENGINEER JENS ERLINGSSON No. 8249 Exp. 9/30/06 ELECTRICAL STATE OF CALIFORNIA

PB POWER, Inc.
A Parsons Brinckerhoff Company
303 Second St., Suite 700N
San Francisco, CA 94107-1317

The State of California or its officers or agents shall not be responsible for the accuracy or completeness of electronic copies of this plan sheet.

Caltrans now has a web site! To get to the web site, go to http://www.dot.ca.gov

REGISTERED PROFESSIONAL ENGINEER FADI WALIEDDINE No. 11465 Exp. 12/31/2009 ELECTRICAL STATE OF CALIFORNIA

FOR REVISION ONLY
1

REQUEST FOR INFORMATION NOT ADDRESSED IN THIS CCO REMAIN IN FORCE

MARK	DATE	DESCRIPTIONS	BY	CH'D	CCO#
1	03/30/09	SERVICE PLATFORM ELECTRICAL CHANGES	RR MP	RG FW	55

REVISIONS

CONTRACT CHANGE ORDER NO._____
SHEET_____ OF _____

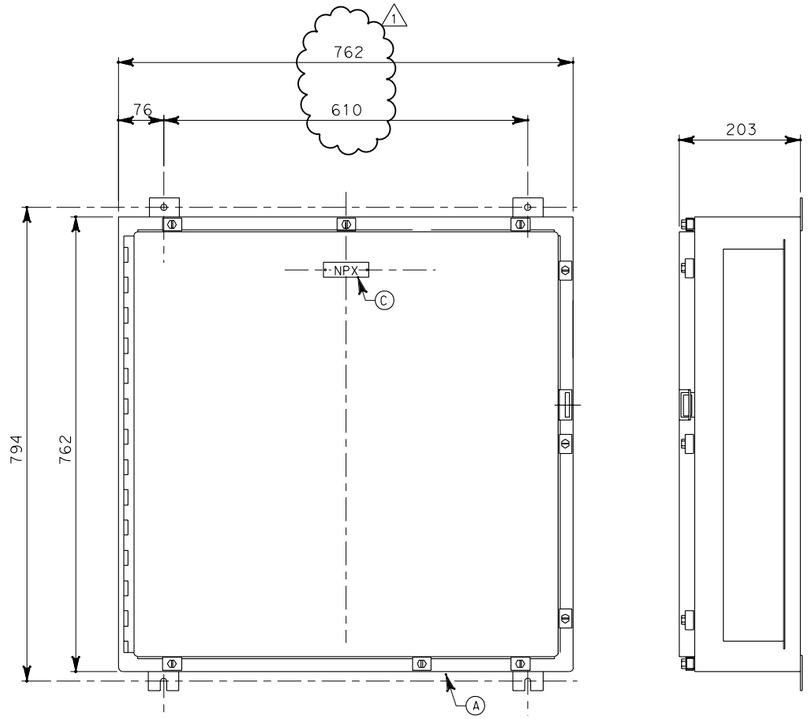

SCADA COMMUNICATION TERMINAL BOX
(5 REQUIRED)

MATERIAL LIST		DET.1
ITEM	DESCRIPTION	QTY (x5)
A	Enclosure, Stainless ~~Steel~~ NEMA type 4X, with interior panel (PB-7B) 1	1
B	Terminal blocks, rated 300 V, barrier type with stop screw terminals	(4) 66 pt
C	Nameplate to be white lamicoid with black core, size 20 mm x 75 mm, lettering to be 3 mm condensed gothic.	as req'd
D	Noise suppressor	100
E	Terminal blocks, rated 300 V, barrier type with stop screw terminals	(2) 60 pt

NAMEPLATE SCHEDULE				WIRING DIAGRAM
ITEM	QTY	LINE No 1	LINE No 2	
NP1	1	SCADA Communication	Term. Box #Com-4	E-325
NP2	1	SCADA Communication	Term. Box #Com-5	E-324
NP3	1	SCADA Communication	Term. Box #Com-6	E-325
NP4	1	SCADA Communication	Term. Box #Com-7	E-325
NP5	1	SCADA Communication	Term. Box #Com-8	E-324

NOTE: Nameplates shall be mounted to the control panel with 4-40 stainless steel machine screws. The control panel to be drilled and tapped. (no self-tapping screws)

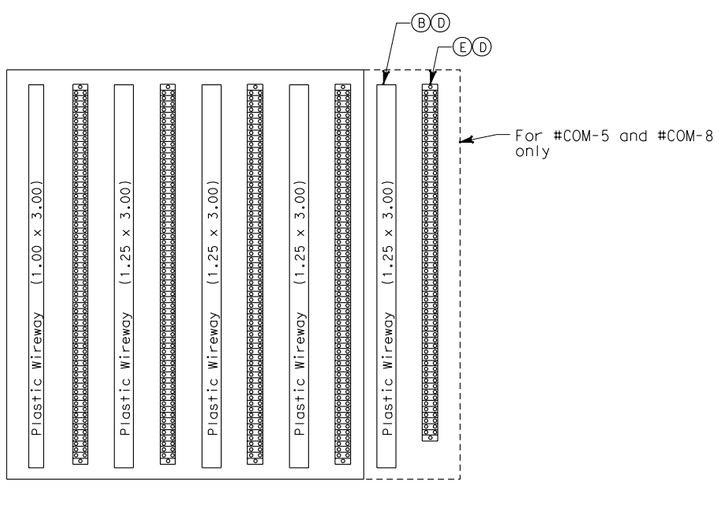

INSIDE PANEL LAYOUT

DETAILS
SCADA REMOTE TERMINAL UNIT SYSTEM
SCADA COMMUNICATION TERMINAL BOX LAYOUT
NO SCALE

E-321

ALL DIMENSIONS ARE IN MILLIMETERS UNLESS OTHERWISE SHOWN

FOR REDUCED PLANS ORIGINAL SCALE IS IN MILLIMETERS 0 20 40 60 80

DGN FILE =>T:\13103\MS\pse\SAS Struc\CCO\SAS CC055\04-0120f1_0308R01.dgn
USERNAME =>garciar

CU 04251 EA 0120F1

STATE OF CALIFORNIA - DEPARTMENT OF TRANSPORTATION
Caltrans

DESIGN OVERSIGHT
BEHZAD GOLEMOHAMMADI

CALCULATED/DESIGNED BY EDC
CHECKED BY JL

DATE 10/01 REVISED BY
11/01 DATE REVISED

LAST REVISION 00-00-00
DATE PLOTTED => 3/31/2009
TIME PLOTTED => 2:34:36 PM

DIST	COUNTY	ROUTE	KILOMETER POST TOTAL PROJECT	SHEET No	TOTAL SHEETS
04	SF	80	13.2/13.9	361 R4	1204

REGISTERED ELECTRICAL ENGINEER 12/19/02 DATE

12-6-04
PLANS APPROVAL DATE

PB POWER, Inc.
A Parsons Brinckerhoff Company
303 Second St., Suite 700N
San Francisco, CA 94107-1317

REGISTERED PROFESSIONAL ENGINEER JENS ERLINGSSON No. 8249 Exp. 9/30/06 ELECTRICAL STATE OF CALIFORNIA

The State of California or its officers or agents shall not be responsible for the accuracy or completeness of electronic copies of this plan sheet.

Caltrans now has a web site! To get to the web site, go to http://www.dot.ca.gov

Caltrans Metric

REQUEST FOR INFORMATION NOT ADDRESSED IN THIS CCO REMAIN IN FORCE

MARK	DATE	DESCRIPTIONS	BY	CH'D	CCO#
4	03/30/09	SERVICE PLATFORM ELECTRICAL CHANGES	RY RR	RG MP	55
3	02/25/08	CABLE TRAY CHANGES	RR TW	RG	42S1
2	03/04/08	BARRIER MODIFICATIONS	JS BM	RG SE	44
1	02/19/08	ELECTRICAL MODIFICATIONS	MP EL	RR	42

REVISIONS

CONTRACT CHANGE ORDER NO._____
SHEET_____ OF_____

REGISTERED PROFESSIONAL ENGINEER MAXWELL FUMIO TAKAKI No. E 8651 Exp. 9/30/2008 ELECTRICAL STATE OF CALIFORNIA
FOR REVISION ONLY 1

REGISTERED PROFESSIONAL ENGINEER S. A. ESTOQUE, JR No. E-10151 Exp. 12/31/2008 ELECTRICAL STATE OF CALIFORNIA
FOR REVISION ONLY 2 3

REGISTERED PROFESSIONAL ENGINEER FADI WALIEDDINE No. 11465 Exp. 12/31/2009 ELECTRICAL STATE OF CALIFORNIA
FOR REVISION ONLY 4

CONDUIT DATA

Conduit No	Reference	Size	Type	Total Fill (mm²)	Allowable Fill (mm²)	Included Cable No.	Conductor Type
1843	E-47	41	RGS conduit	0.00	534.55	Pull rope	Soft-Fiber Polyester
1844	E-47	41	RGS conduit	0.00	534.55	Pull rope	Soft-Fiber Polyester
1845	E-47	41	RGS conduit	0.00	534.55	Pull rope	Soft-Fiber Polyester
1846	E-48	41	RGS conduit	0.00	534.55	Pull rope	Soft-Fiber Polyester
1847	E-48	41	RGS conduit	0.00	534.55	Pull rope	Soft-Fiber Polyester
1848	E-48	41	RGS conduit	0.00	534.55	Pull rope	Soft-Fiber Polyester
1849	E-48	41	RGS conduit	0.00	534.55	Pull rope	Soft-Fiber Polyester
1850	E-48	41	RGS conduit	0.00	534.55	Pull rope	Soft-Fiber Polyester
1851	E-49	41	RGS conduit	0.00	534.55	Pull rope	Soft-Fiber Polyester
1852	E-49	41	RGS conduit	0.00	534.55	Pull rope	Soft-Fiber Polyester
1853	E-49	41	RGS conduit	0.00	534.55	Pull rope	Soft-Fiber Polyester
1854	E-49	41	RGS conduit	262.06	534.55		
						UP107-3A	2 + 1 gnd #12,#12, 600 V, RHH/RHW insulation
						Pull rope	Soft-Fiber Polyester
1855	E-49	41	RGS conduit	262.06	534.55		
						UP107-3A	2 + 1 gnd #12,#12, 600 V, RHH/RHW insulation
						Pull rope	Soft-Fiber Polyester
1856	E-50	41	RGS conduit	262.06	534.55		
						UP107-3A	2 + 1 gnd #12,#12, 600 V, RHH/RHW insulation
						Pull rope	Soft-Fiber Polyester
1857	E-50	41	RGS conduit	162.40	534.55	UP107-3A	2 + 1 gnd #12,#12, 600 V, RHH/RHW insulation
						Pull rope	Soft-Fiber Polyester
1858	E-50	41	RGS conduit	0.00	534.55		
						Pull rope	Soft-Fiber Polyester
1859	E-50	41	RGS conduit	0.00	534.55	Pull rope	Soft-Fiber Polyester
1860	E-50	41	RGS conduit	0.00	534.55		
						Pull rope	Soft-Fiber Polyester
1861	E-50	41	RGS conduit	265.64	534.55	Pull rope	Soft-Fiber Polyester
						S-1032-2	3 + 1 gnd #6, #8, 600 V, RHH/RHW insulation
1862	E-50, E-51	41	RGS conduit	265.64	534.55	Pull rope	Soft-Fiber Polyester
						S-1032-2	3 + 1 gnd #6, #8, 600 V, RHH/RHW insulation
1863	E-51	41	RGS conduit	265.64	534.55	Pull rope	Soft-Fiber Polyester
						S-1032-S	3 + 1 gnd #6, #8, 600 V, RHH/RHW insulation
1864	E-51	41	RGS conduit	0.00	534.55	Pull rope	Soft-Fiber Polyester
1865	E-51	41	RGS conduit	0.00	534.55	Pull rope	Soft-Fiber Polyester
1900	E-50	41	RGS conduit	0.00	534.55	Pull rope	Soft-Fiber Polyester
1901	E-50	41	RGS conduit	0.00	534.55	Pull rope	Soft-Fiber Polyester
1902	E-50	41	RGS conduit	0.00	534.55	Pull rope	Soft-Fiber Polyester
1903	E-51	41	RGS conduit	0.00	534.55	Pull rope	Soft-Fiber Polyester
1904	E-51	41	RGS conduit	0.00	534.55	Pull rope	Soft-Fiber Polyester
1905	E-51	41	RGS conduit	0.00	534.55	Pull rope	Soft-Fiber Polyester
1906	E-51	41	RGS conduit	0.00	534.55	Pull rope	Soft-Fiber Polyester

CONDUIT DATA

Conduit No	Reference	Size	Type	Total Fill (mm²)	Allowable Fill (mm²)	Included Cable No.	Conductor Type
1907	E-51	41	RGS conduit	0.00	534.55	Pull rope	Soft-Fiber Polyester
1908	E-51	41	RGS conduit	0.00	534.55	Pull rope	Soft-Fiber Polyester
1950	E-50	41	RGS conduit	0.00	534.55	Pull rope	Soft-Fiber Polyester
1951	E-50	41	RGS conduit	0.00	534.55	Pull rope	Soft-Fiber Polyester
1952	E-50	41	RGS conduit	0.00	534.55	Pull rope	Soft-Fiber Polyester
1953	E-51	41	RGS conduit	0.00	534.55	Pull rope	Soft-Fiber Polyester
1954	E-51	41	RGS conduit	0.00	534.55	Pull rope	Soft-Fiber Polyester
1955	E-51	41	RGS conduit	0.00	534.55	Pull rope	Soft-Fiber Polyester
1956	E-51	41	RGS conduit	0.00	534.55	Pull rope	Soft-Fiber Polyester
1957	E-51	41	RGS conduit	0.00	534.55	Pull rope	Soft-Fiber Polyester
1958	E-51	41	RGS conduit	0.00	534.55	Pull rope	Soft-Fiber Polyester
1T13	E-96, E-101 E-126A	305	152.4 mm siderail ladder tray	2780.99	19354.80	1391	3-1/C #4/0 + 1/C #1/0 gnd, 15 kV, EPR insulation
						Pull rope	Soft-Fiber Polyester
1T14	E-20B, E-126	305	152.4 mm siderail ladder tray	2780.99	8387.08	1391	3-1/C #4/0 + 1/C #1/0 gnd, 15 kV, EPR insulation
						Pull rope	Soft-Fiber Polyester
1T23	E-114B (4)	610	152.4 mm siderail ladder tray	14012.37	18064.48		
						A-3010-1	1-3/C + gnd #2, 600 V, EPR insulation
						1115-2	1-3/C #16, 600 V, EPR insulation
						S-1031-1	1-3/C + gnd #2, 600 V, EPR insulation
						1115-1	1-3/C #14, 600 V, EPR insulation
						2201-1	1-2/C + gnd #8, 600 V, EPR insulation
						A-3009-3	1-3/C + gnd #6, 600 V, EPR insulation
						1106	1-3/C + gnd #6, 600 V, EPR insulation
						S-3056-5	1-4/C #14, 600 V, EPR insulation
						S-3056-7	1-2/C #14, 600 V, EPR insulation
						S-3056-8	1-4/C #14, 600 V, EPR insulation
						Pull rope	Soft-Fiber Polyester
						A-3010-3	1-3/C #6 + gnd 600 V, RHH/RHW insulation
						S-3051-1	1-3/C + gnd #4, 600 V, EPR insulation
						UP108-3	1-2/C + gnd #8, 600 V, EPR insulation
						1255-1	1-3/C #16 ,600V, EPR insulation
						A-3001-1	1-3/C + gnd #4, 600 V, EPR insulation
						A-3012-1	1-3/C + gnd #2, 600 V, EPR insulation
						A-3013-1	1-3/C + gnd #2, 600 V, EPR insulation
						S-3022-1	1-3/C + gnd #2, 600 V, EPR insulation
						A-3002-1	1-3/C + gnd #4, 600 V, EPR insulation
						UP107-6	1-2/C + gnd #8, 600 V, EPR insulation

For continuation, see next sheet.

CONDUIT AND TRAY SCHEDULE

E-406

DESIGN OVERSIGHT	CALCULATED/ DESIGNED BY	CHECKED BY	REVISED BY	DATE REVISED
BEHZAD GOLEMOHAMMADI	PBP	AB	DATE 8/02	8/02

STATE OF CALIFORNIA - DEPARTMENT OF TRANSPORTATION
Caltrans

LAST REVISION 00-00-00
DATE PLOTTED => 3/31/2009
TIME PLOTTED => 2:33:55 PM

DIST	COUNTY	ROUTE	KILOMETER POST TOTAL PROJECT	SHEET No	TOTAL SHEETS
04	SF	80	13.2/13.9	362 R3	1204

REGISTERED ELECTRICAL ENGINEER 12/19/02 DATE

12-6-04
PLANS APPROVAL DATE

REGISTERED PROFESSIONAL ENGINEER JENS ERLINGSSON No. 8249 Exp. 9/30/06 ELECTRICAL STATE OF CALIFORNIA

PB POWER, Inc.
A Parsons Brinckerhoff Company
303 Second St., Suite 700N
San Francisco, CA 94107-1317

The State of California or its officers or agents shall not be responsible for the accuracy or completeness of electronic copies of this plan sheet.

Caltrans now has a web site! To get to the web site, go to http://www.dot.ca.gov

Caltrans Metric

REQUEST FOR INFORMATION NOT ADDRESSED IN THIS CCO REMAIN IN FORCE

MARK	DATE	DESCRIPTIONS	BY	CH'D	CCO#
3	03/30/09	SERVICE PLATFORM ELECTRICAL CHANGES	RY RR	RG MP	55
2	02/25/08	CABLE TRAY CHANGES	RR TW	RG	42S1
1	03/04/08	BARRIER MODIFICATIONS	JS BM	RG	44

REVISIONS

CONTRACT CHANGE ORDER NO._____
SHEET_____ OF_____

REGISTERED PROFESSIONAL ENGINEER S. A. ESTOQUE, JR No. E-10151 Exp. 12/31/2008 ELECTRICAL STATE OF CALIFORNIA
FOR REVISION ONLY 1 2

REGISTERED PROFESSIONAL ENGINEER FADI WALIEDDINE No. 11465 Exp. 12/31/2009 ELECTRICAL STATE OF CALIFORNIA
FOR REVISION ONLY 3

CONDUIT DATA

Conduit No.	Reference	Size	Type	Total Fill (mm²)	Allowable Fill (mm²)	Included Cable No.	Conductor Type
						1117-1	1-3/C #14, 600 V, EPR insulation
						A-3009-1	1-3/C + gnd #2, 600 V, EPR insulation
						1202-4	1-3/C #14, 600 V, EPR insulation
						1117-2	1-3/C #16, 600 V, EPR insulation
						S-3021-1	1-3/C + gnd #4, 600 V, EPR insulation
						S-3023-1	1-3/C + gnd #4, 600 V, EPR insulation
						S-3056-1	1-3/C + gnd #6, 600 V, EPR insulation
						S-1031-3	1-3/C + gnd #4, 600 V, EPR insulation
						S-1032-1	1-3/C + gnd #4, 600 V, EPR insulation
						A-1035-1	1-3/C + gnd #6, 600 V, EPR insulation
						1202-3	1-7/C #16, 600 V, EPR insulation
						1099	1-3/C + gnd #2, 600 V, EPR insulation
						1098	1-3/C + gnd #2, 600 V, EPR insulation
						1097	1-3/C + gnd #2, 600 V, EPR insulation
						1096	1-3/C + gnd #2, 600 V, EPR insulation
						1095	1-3/C + gnd #2, 600 V, EPR insulation
						1117	1-3/C + gnd #2/0, 600 V, EPR insulation
						1256-1	1-3/C #16, 600 V, EPR insulation
						1202-1	1-2/C + gnd #8 ,600 V, EPR insulation
						1255-2	1-3/C #16, 600 V, EPR insulation
						A-3008-1	1-2/C + gnd #8, 600 V, EPR insulation
						1202-2	1-3/C #14, 600 V, EPR insulation
						A-3011-1	1-3/C + gnd #2, 600 V, EPR insulation
1T24	E-114	610	152.4 mm siderail ladder tray	1652.27	18064.48	UP104-7	1-2/C + gnd #8, 600 V, EPR insulation
						1095	1-3/C + gnd #2, 600 V, EPR insulation
						Pull rope	Soft-Fiber Polyester
						UP104-9	1-2/C + gnd #10, 600 V, EPR insulation
						UP104-8	1-2/C + gnd #8, 600 V, EPR insulation
						1255-1	1-3/C #16, 600 V, EPR insulation
						UP104-3	1-2/C + gnd #10, 600 V, EPR insulation
						UP204-1	1-2/C + gnd #10, 600 V, EPR insulation
						UP104-6	1-2/C + gnd #8 ,600 V, EPR insulation
1T25	E-114B 3	610	152.4 mm siderail ladder tray	3092.69	18064.48	UP105-10	1-2/C + gnd #8, 600 V, EPR insulation
						1201-1	1-2/C + gnd #8, 600 V, EPR insulation
						1201-2	1-2/C + gnd #8, 600 V, EPR insulation
						1201-6	1-2/C + gnd #8, 600 V, EPR insulation
						1096	1-3/C + gnd #2, 600 V, EPR insulation
						1255-1	1-3/C #16, 600 V, EPR insulation
						1202-4	1-3/C #14, 600 V, EPR insulation
						UP105-8	1-2/C + gnd #8, 600 V, EPR insulation
						UP205-1	1-2/C + gnd #10, 600 V, EPR insulation
						1115-1	1-3/C #14, 600 V, EPR insulation
						1202-3	1-7/C #16, 600 V, EPR insulation
						1202-2	1-3/C #14, 600 V, EPR insulation
						1115-2	1-3/C #16, 600 V, EPR insulation
						1255-2	1-3/C #16, 600 V, EPR insulation
						Pull rope	Soft-Fiber Polyester
						UP105-3	1-2/C + gnd #10, 600 V, EPR insulation
						UP105-9	1-2/C + gnd #8, 600 V, EPR insulation
						UP105-7	1-2/C + gnd #8, 600 V, EPR insulation
						S-3056-5	1-4/C #14, 600 V, EPR insulation
						S-3056-7	1-2/C #14, 600 V, EPR insulation
1T26	E-116	610	152.4 mm siderail ladder tray	2773.72	18064.48	UP106-1	1-2/C + gnd #8, 600 V, EPR insulation
						UP106-8	1-2/C + gnd #8, 600 V, EPR insulation
						UP106-3	1-2/C + gnd #8, 600 V, EPR insulation
						1255-2	1-3/C #16, 600 V, EPR insulation
						UP206-1	1-2/C + gnd #10, 600 V, EPR insulation
						Pull rope	Soft-Fiber Polyester
						1202-2	1-3/C #14, 600 V, EPR insulation
						1202-3	1-7/C #16, 600 V, EPR insulation
						UP106-6	1-2/C + gnd #8, 600 V, EPR insulation
						UP106-7	1-2/C + gnd #8, 600 V, EPR insulation
						CCTVE01BA	TVP
						CCTVE01BB	TVCP
						UP106-9	1-2/C + gnd #8, 600 V, EPR insulation
						1097	1-3/C + gnd #2, 600 V, EPR insulation
						1202-4	1-3/C #14, 600 V, EPR insulation
						1202-1	1-2/C + gnd #8, 600 V, EPR insulation
1T27	E-117	610	152.4 mm siderail ladder tray	1726.55	18064.48	UP107-6	1-2/C + gnd #8, 600 V, EPR insulation
						Pull rope	Soft-Fiber Polyester
						UP107-7	1-2/C + gnd #8, 600 V, EPR insulation
						UP107-9	1-2/C + gnd #8, 600 V, EPR insulation
						1256-1	1-3/C #16 ,600V, EPR insulation
						UP107-8	1-2/C + gnd #8, 600 V, EPR insulation

CONDUIT DATA

Conduit No.	Reference	Size	Type	Total Fill (mm²)	Allowable Fill (mm²)	Included Cable No.	Conductor Type
						1098	1-3/C + gnd #2, 600 V, EPR insulation
						UP107-3	1-2/C + gnd #8, 600 V, EPR insulation
1T28	E-118	610	152.4 mm siderail ladder tray	3336.36	18064.48	UP108-8	1-2/C + gnd #8, 600 V, EPR insulation
						UP108-3	1-2/C + gnd #8, 600 V, EPR insulation
						UP108-10	1-2/C + gnd #8, 600 V, EPR insulation
						S-3056-8	1-4/C #14, 600 V, EPR insulation 3
						Pull rope	Soft-Fiber Polyester
						UP108-7	1-2/C + gnd #8, 600 V, EPR insulation
						1117-2	1-3/C #16 ,600V, EPR insulation
						2201-5	1-3/C #14, 600 V, EPR insulation
						2201-3	1-3/C #14, 600 V, EPR insulation
						2201-1	1-2/C + gnd #8, 600 V, EPR insulation
						2201-4	1-9/C #16, 600 V, EPR insulation
						1118-2	1-3/C #16, 600 V, EPR insulation
						UP108-9	1-2/C + gnd #8, 600 V, EPR insulation
						UP108-12	1-2/C + gnd #8, 600 V, EPR insulation
						1117-1	1-3/C #14, 600 V, EPR insulation
						1118-1	1-3/C #14, 600 V, EPR insulation 3
						1099	1-3/C + gnd #2, 600 V, EPR insulation
						1256-1	1-3/C #16, 600 V, EPR insulation
1T29	E-20B, E-126	610	152.4 mm siderail ladder tray	11507.41	18064.48	1106	1-3/C + gnd #6, 600 V, EPR insulation
						S-1032-1	1-3/C + gnd #4, 600 V, EPR insulation
						A-3002-1	1-3/C + gnd #4, 600 V, EPR insulation
						A-3001-1	1-3/C + gnd #4, 600 V, EPR insulation
						A-3013-1	1-3/C + gnd #2, 600 V, EPR insulation
						A-3012-1	1-3/C + gnd #2, 600 V, EPR insulation
						S-3023-1	1-3/C + gnd #4, 600 V, EPR insulation
						1097	1-3/C + gnd #2, 600 V, EPR insulation
						S-3051-1	1-3/C + gnd #4, 600 V, EPR insulation
						A-1035-1	1-3/C + gnd #6, 600 V, EPR insulation
						A-3011-1	1-3/C + gnd #2, 600 V, EPR insulation
						S-3021-1	1-3/C + gnd #4, 600 V, EPR insulation
						S-3022-1	1-3/C + gnd #2, 600 V, EPR insulation
						S-3056-1	1-3/C + gnd #6, 600 V, EPR insulation
						1098	1-3/C + gnd #2, 600 V, EPR insulation
						1096	1-3/C + gnd #2, 600 V, EPR insulation
						1095	1-3/C + gnd #2, 600 V, EPR insulation
						S-1031-1	1-3/C + gnd #2, 600 V, EPR insulation
						Pull rope	Soft-Fiber Polyester
						1099	1-3/C + gnd #2, 600 V, EPR insulation
						A-3008-1	1-2/C + gnd #8, 600 V, EPR insulation
						1117	1-3/C + gnd #2/0, 600 V, EPR insulation
						A-3010-1	1-3/C + gnd #2, 600 V, EPR insulation
						1115	1-3/C + gnd #1/0, 600 V, EPR insulation
						1115-1	1-3/C #14, 600 V, EPR insulation
						1115-2	1-3/C #16, 600 V, EPR insulation
						A-3009-1	1-3/C + gnd #2, 600 V, EPR insulation

For continuation, see next sheet.

CONDUIT AND TRAY SCHEDULE

E-407

REVISED BY	DATE REVISED

CALCULATED/DESIGNED BY	DATE 8/02
PBP	8/02
CHECKED BY	AB

DESIGN OVERSIGHT
BEHZAD GOLEMOHAMMADI

STATE OF CALIFORNIA - DEPARTMENT OF TRANSPORTATION
Caltrans

LAST REVISION 00-00-00
DATE PLOTTED => 3/31/2009
TIME PLOTTED => 2:33:15 PM

FOR REDUCED PLANS ORIGINAL SCALE IS IN MILLIMETERS 0 20 40 60 80

DGN FILE =>T:\13103\MS\pse\SAS Struc\CCO\SAS CC055\04-0120f1_0362R03.dgn
USERNAME =>garciar

CU 04251

EA 0120F1

DIST	COUNTY	ROUTE	KILOMETER POST TOTAL PROJECT	SHEET No	TOTAL SHEETS
04	SF	80	13.2/13.9	363 R3	1204

REGISTERED ELECTRICAL ENGINEER 12/19/02 DATE

12-6-04
PLANS APPROVAL DATE

REGISTERED PROFESSIONAL ENGINEER JENS ERLINGSSON No. 8249 Exp. 9/30/06 ELECTRICAL STATE OF CALIFORNIA

PB POWER, Inc.
A Parsons Brinckerhoff Company
303 Second St., Suite 700N
San Francisco, CA 94107-1317

The State of California or its officers or agents shall not be responsible for the accuracy or completeness of electronic copies of this plan sheet.

Caltrans now has a web site! To get to the web site, go to http://www.dot.ca.gov

Caltrans Metric

REQUEST FOR INFORMATION NOT ADDRESSED IN THIS CCO REMAIN IN FORCE

MARK	DATE	DESCRIPTIONS	BY	CH'D	CCO#
3	03/30/09	SERVICE PLATFORM ELECTRICAL CHANGES	RY RR	RG MP	55
2	02/25/08	CABLE TRAY CHANGES	RR TW	RG	42S1
1	03/04/08	BARRIER MODIFICATIONS	JS BM	RG	44

REVISIONS

CONTRACT CHANGE ORDER NO._____
SHEET_____ OF_____

REGISTERED PROFESSIONAL ENGINEER S. A. ESTOQUE, JR. No. E-10151 Exp. 12/31/2008 ELECTRICAL STATE OF CALIFORNIA

FOR REVISION ONLY 1 2

REGISTERED PROFESSIONAL ENGINEER FADI WALIEDDINE No. 11465 Exp. 12/31/2009 ELECTRICAL STATE OF CALIFORNIA

FOR REVISION ONLY 3

CONDUIT DATA

Conduit No	Reference	Size	Type	Total Fill (mm²)	Allowable Fill (mm²)	Included Cable No.	Conductor Type
1T33	E-114B 3	610	152.4 mm siderail ladder tray	7720.94	18064.48	UP104-8	1-2/C + gnd #8, 600 V, EPR insulation
						UP108-12	1-2/C + gnd #8, 600 V, EPR insulation
						UP108-9	1-2/C + gnd #8, 600 V, EPR insulation
						A-1011-1	1-3/C + gnd #2, 600 V, EPR insulation
						A-1012-1	1-3/C + gnd #2, 600 V, EPR insulation
						UP104-3	1-2/C + gnd #10, 600 V, EPR insulation
						UP107-3	1-2/C + gnd #8, 600 V, EPR insulation
						UP105-9	1-2/C + gnd #8, 600 V, EPR insulation
						UP104-9	1-2/C + gnd #10, 600 V, EPR insulation
						Pull rope	Soft-Fiber Polyester
						UP108-4	1-2/C + gnd #8, 600 V, EPR insulation
						UP108-2	1-2/C + gnd #8, 600 V, EPR insulation
						UP108-7	1-2/C + gnd #8, 600 V, EPR insulation
						UP107-7	1-2/C + gnd #8, 600 V, EPR insulation
						UP106-7	1-2/C + gnd #8, 600 V, EPR insulation
						UP105-7	1-2/C + gnd #8, 600 V, EPR insulation
						A-1013-1	1-3/C + gnd #2, 600 V, EPR insulation
						UP107-9	1-2/C + gnd #8, 600 V, EPR insulation
						A-1014-1	1-3/C + gnd #2, 600 V, EPR insulation
						UP106-3	1-2/C + gnd #8, 600 V, EPR insulation
						UP105-3	1-2/C + gnd #10, 600 V, EPR insulation
						UP106-6	1-2/C + gnd #8, 600 V, EPR insulation
						UP105-10	1-2/C + gnd #8, 600 V, EPR insulation
						UP104-6	1-2/C + gnd #8, 600 V, EPR insulation
						UP107-8	1-2/C + gnd #8, 600 V, EPR insulation
						UP106-8	1-2/C + gnd #8, 600 V, EPR insulation
						UP105-8	1-2/C + gnd #8, 600 V, EPR insulation
						UP104-7	1-2/C + gnd #8, 600 V, EPR insulation
						UP108-8	1-2/C + gnd #8, 600 V, EPR insulation
						UP106-9	1-2/C + gnd #8, 600 V, EPR insulation
						UP108-10	1-2/C + gnd #8, 600 V, EPR insulation
1T39	E-20B, E-126	610	152.4 mm siderail ladder tray	1054.36	18064.48	A-1011-1	1-3/C + gnd #2, 600 V, EPR insulation
						A-1014-1	1-3/C + gnd #2, 600 V, EPR insulation
						Pull rope	Soft-Fiber Polyester
1T43	E-114B 3	610	152.4 mm siderail solid bottom tray	11370.25	38709.60	MVDSW04A	MVDS DLC
						1144	1 - 2 pair, shielded #18 with IS/OA , 300 V, PVC jacket
						1475-3C	12 Fiber, single mode fiberoptic cable
						1475-3A	12 Fiber, single mode fiberoptic cable
						1474-4	50 pair #18, shielded pairs, IS/OS shield 600 V, XLPE insul., PVC jacket
						1145	1 - 2 pair, shielded #18 with IS/OA , 300 V, PVC jacket
						1474-5	50 pair #18, shielded pairs, IS/OS shield 600 V, XLPE insul., PVC jacket
						1474-7	50 pair #18, shielded pairs, IS/OS shield 600 V, XLPE insul., PVC jacket
						1477-2	72 Fiber, single mode fiberoptic riser cable
						1475-3	72 Fiber, single mode fiberoptic riser cable
						MVDSW02A	MVDS DLC
						1475-3B	12 Fiber, single mode fiberoptic cable
						2900-472B	4 pair #22, shielded pairs, FEP insulation
						2900-182A	4 pair #22, shielded pairs, FEP insulation
						2900-182B	4 pair #22, shielded pairs, FEP insulation
						2900-202A	4 pair #22, shielded pairs, FEP insulation
						2900-282A	4 pair #22, shielded pairs, FEP insulation
						2900-342A	4 pair #22, shielded pairs, FEP insulation
						2900-392A	4 pair #22, shielded pairs, FEP insulation
						2900-462A	4 pair #22, shielded pairs, FEP insulation
						2900-472A	4 pair #22, shielded pairs, FEP insulation
						Pull rope	Soft-Fiber Polyester
						2900-472C	4 pair #22, shielded pairs, FEP insulation
						1474-8	50 pair #18, shielded pairs, IS/OS shield 600 V, XLPE insul., PVC jacket
						1473-5	50 pair #18, shielded pairs, IS/OS shield 600 V, XLPE insul., PVC jacket
						1473-7	50 pair #18, shielded pairs, IS/OS shield 600 V, XLPE insul., PVC jacket
						1473-10	50 pair #18, shielded pairs, IS/OS shield 600V, XLPE insul., PVC jacket

CONDUIT DATA

Conduit No	Reference	Size	Type	Total Fill (mm²)	Allowable Fill (mm²)	Included Cable No.	Conductor Type
						1474-10	50 pair #18, shielded pairs, IS/OS shield 600 V, XLPE insul., PVC jacket
						2900-462B	4 pair #22, shielded pairs, FEP insulation
1T44	E-114A 3	610	152.4 mm siderail solid bottom tray	3785.76	38709.60	1473-5	50 pair #18, shielded pairs, IS/OS shield 600 V, XLPE insul., PVC jacket
						1474-5	50 pair #18, shielded pairs, IS/OS shield 600 V, XLPE insul., PVC jacket
						1475-3A	12 Fiber, single mode fiberoptic cable
						MVDSW02A	MVDS DLC
						Pull rope	Soft-Fiber Polyester
						1474-4	50 pair #18, shielded pairs, IS/OS shield 600 V, XLPE insul., PVC jacket
1T45	E-114B 3	610	152.4 mm siderail solid bottom tray	3563.45	38709.60	Pull rope	Soft-Fiber Polyester
						2900-182A	4 pair #22, shielded pairs, FEP insulation
						2910-10	4 pair #22, shielded pairs, 300 V, PE insulation
						2910-8	4 pair #22, shielded pairs, 300 V, PE insulation
						1473-5	50 pair #18, shielded pairs, IS/OS shield 600 V, XLPE insul., PVC jacket
						1474-5	50 pair #18, shielded pairs, IS/OS shield 600 V, XLPE insul., PVC jacket
						1474-5B	1 - 6 pair, shielded #18 with overall shield , 300 V, PVC jacket
						1474-5A	1 - 6 pair, shielded #18 with overall shield , 300 V, PVC jacket
						2900-472C	4 pair #22, shielded pairs, FEP insulation
						2900-182B	4 pair #22, shielded pairs, FEP insulation
						2900-472A	4 pair #22, shielded pairs, FEP insulation
						2900-462B	4 pair #22, shielded pairs, FEP insulation
						2900-462A	4 pair #22, shielded pairs, FEP insulation
						2900-392A	4 pair #22, shielded pairs, FEP insulation
						2900-342A	4 pair #22, shielded pairs, FEP insulation
						2900-282A	4 pair #22, shielded pairs, FEP insulation
						2910-7	4 pair #24, overall shielded, 30 V, PE insulation
						2900-472B	4 pair #22, shielded pairs, FEP insulation
						2900-202A	4 pair #22, shielded pairs, FEP insulation
1T46	E-98, E-114 3	610	152.4 mm siderail solid bottom tray	2757.87	38709.60	CCTVE01BD	TVL
						1474-7	50 pair #18, shielded pairs, IS/OS shield 600 V, XLPE insul., PVC jacket
						MVDSW03A	MVDS DLC
						CCTVE01BC	TVC
						1475-3B	12 Fiber, single mode fiberoptic cable
						Pull rope	Soft-Fiber Polyester
						1473-7	50 pair #18, shielded pairs, IS/OS shield 600 V, XLPE insul., PVC jacket

For continuation, see next sheet.

CONDUIT AND TRAY SCHEDULE

E-408

REVISED BY	DATE REVISED
PBP	8/02

CALCULATED/DESIGNED BY	CHECKED BY
AB	

DESIGN OVERSIGHT
BEHZAD GOLEMOHAMMADI

STATE OF CALIFORNIA - DEPARTMENT OF TRANSPORTATION
Caltrans

LAST REVISION 00-00-00
DATE PLOTTED => 3/31/2009
TIME PLOTTED => 2:32:35 PM

FOR REDUCED PLANS ORIGINAL SCALE IS IN MILLIMETERS 0 20 40 60 80

DGN FILE =>T:\13103\MS\pse\SAS Struc\CCO\SAS CCO55\04-0120f1_0363R03.dgn
USERNAME =>garciar

CU 04251 EA 0120F1

CONDUIT DATA

Conduit No	Reference	Size	Type	Total Fill (mm²)	Allowable Fill (mm²)	Included Cable No.	Conductor Type
2959	E-139	41	RGS conduit	0.00	534.55	Pull rope	Soft-Fiber Polyester
2960	E-139	41	RGS conduit	440.31	534.55	LP223-2,4A	3 + 1 gnd #6,#8, 600 V, RHH/RHW insulation
						Pull rope	Soft-Fiber Polyester
2961	E-139	41	RGS conduit	0.00	534.55	Pull rope	Soft-Fiber Polyester
2962	E-138	41	RGS conduit	0.00	534.55	Pull rope	Soft-Fiber Polyester
2963	E-138	41	RGS conduit	0.00	534.55	Pull rope	Soft-Fiber Polyester
2964	E-138	41	RGS conduit	0.00	534.55	Pull rope	Soft-Fiber Polyester
2965	E-138	41	RGS conduit	0.00	534.55	Pull rope	Soft-Fiber Polyester
2966	E-138	41	RGS conduit	0.00	534.55	Pull rope	Soft-Fiber Polyester
2967	E-138	41	RGS conduit	0.00	534.55	Pull rope	Soft-Fiber Polyester
2T13	E-181 Thru E-186	305	152.4 mm siderail ladder tray	2780.99	8387.08	Pull rope	Soft-Fiber Polyester
	E-212A					2391	3-1/C #4/0 + 1/C #1/0 gnd, 15kV, EPR insulation
2T14	E-212, E-21B	305	152.4 mm siderail ladder tray	2780.99	8387.08	Pull rope	Soft-Fiber Polyester
						2391	3-1/C #4/0 + 1/C #1/0 gnd, 15kV, EPR insulation
2T14A	E-21, E-21E	305	152.4 mm siderail ladder tray	0.00	12580.62		
2T14B	E-21, E-21E	305	152.4 mm siderail ladder tray	0.00	12580.62		
2T21	E182,E207C,E264	610	152.4 mm siderail ladder tray	0.00	16774.16		
2T23	E-114B 3	760	152.4 mm siderail ladder tray	19079.92	22580.60	2202-2	1-3/C #14,600 V, EPR insulation
						A-3004-1	1-3/C + gnd #2,600 V, EPR insulation
						A-3003-1	1-3/C + gnd #4,600 V, EPR insulation
						A-2013-1	1-3/C + gnd #2,600 V, EPR insulation
						A-2012-1	1-3/C + gnd #2,600 V, EPR insulation
						2123	1-3/C + gnd #2,600 V, EPR insulation
						2202-3	1-7/C #16,600 V, EPR insulation
						2105	1-3/C + gnd #2,600 V, EPR insulation
						2106	1-3/C + gnd #2,600 V, EPR insulation
						2120-1	1-3/C #14,600 V, EPR insulation
						2120-2	1-3/C #14,600 V, EPR insulation
						2202-4	1-3/C #14,600 V, EPR insulation
						2104	1-3/C + gnd #2,600 V, EPR insulation
						2121	1-3/C + gnd #1/0,600 V, EPR insulation
						2204-1	1-3/C #16,600 V, EPR insulation
						UP204-7	1-2/C + gnd #8,600 V, EPR insulation
						2119-A	1-3/C + gnd 250 Kcmil,600 V, EPR insulation
						CCTVE01BA	TVP
						CCTVE01BB	TVCP
						CCTVE01AA	TVP
						2121-2	1-3/C #14,600 V, EPR insulation
						2201-2	1-2/C + gnd #8,600 V, EPR insulation
						2123-2	1-3/C + gnd #2/0,600 V, EPR insulation
						2123-3	1-3/C + gnd #2/0,600 V, EPR insulation
						1118	1-3/C + gnd #2/0,600 V, EPR insulation
						2095	1-3/C + gnd #2,600 V, EPR insulation
						2096	1-3/C + gnd #2,600 V, EPR insulation
						2097	1-3/C + gnd #2,600 V, EPR insulation
						2098	1-3/C + gnd #2,600 V, EPR insulation
						2099	1-3/C + gnd #2,600 V, EPR insulation
						S-3053-1	1-3/C + gnd #2,600 V, EPR insulation
						2107	1-3/C + gnd #2,600 V, EPR insulation
						2120	1-3/C + gnd #1/0,600 V, EPR insulation
						2201-6	1-2/C + gnd #8,600 V, EPR insulation
						1201-1	1-2/C + gnd #8,600 V, EPR insulation
						2202-1	1-2/C + gnd #8,600 V, EPR insulation
						2204-2	1-3/C #16,600 V, EPR insulation
						Pull rope	Soft-Fiber Polyester
						A-3041-1	1-3/C + gnd #2,600 V, EPR insulation
						S-3052-1	1-3/C + gnd #2,600 V, EPR insulation
						2125	1-3/C + gnd 250 Kcmil,600 V, EPR insulation
						2103	1-3/C + gnd #2,600 V, EPR insulation
						S-3056-9	1-4/C #14,600 V, EPR insulation
						CCTVE01AB	TVCP
						2121-1	1-3/C #14,600 V, EPR insulation
						S-3056-6	1-4/C #14,600 V, EPR insulation

MARK	DATE	DESCRIPTIONS	BY	CH'D	CCO#
3	03/30/09	SERVICE PLATFORM ELECTRICAL CHANGES	RY RR	RG MP	55
2	02/25/08	CABLE TRAY CHANGES	TW	RG	42S1
1	03/04/08	BARRIER MODIFICATIONS	JS BM	RG SE	44

REQUEST FOR INFORMATION NOT ADDRESSED IN THIS CCO REMAIN IN FORCE

REVISIONS

CONTRACT CHANGE ORDER NO._____
SHEET_____ OF _____

REGISTERED PROFESSIONAL ENGINEER S. A. ESTOQUE, JR. No. E-10151 Exp. 12/31/2008 ELECTRICAL STATE OF CALIFORNIA

FOR REVISION ONLY 1 2

REGISTERED PROFESSIONAL ENGINEER FADI WALIEDDINE No. 11465 Exp. 12/31/2009 ELECTRICAL STATE OF CALIFORNIA

FOR REVISION ONLY 3

Caltrans Metric

DIST	COUNTY	ROUTE	KILOMETER POST TOTAL PROJECT	SHEET No	TOTAL SHEETS
04	SF	80	13.2/13.9	373 R3	1204

12/19/02
REGISTERED ELECTRICAL ENGINEER DATE

12-6-04
PLANS APPROVAL DATE

REGISTERED PROFESSIONAL ENGINEER JENS ERLINGSSON No. 8249 Exp. 9/30/06 ELECTRICAL STATE OF CALIFORNIA

PB POWER, Inc.
A Parsons Brinckerhoff Company
303 Second St., Suite 700N
San Francisco, CA 94107-1317

The State of California or its officers or agents shall not be responsible for the accuracy or completeness of electronic copies of this plan sheet.

Caltrans now has a web site! To get to the web site, go to: http://www.dot.ca.gov

CONDUIT DATA

Conduit No	Reference	Size	Type	Total Fill (mm²)	Allowable Fill (mm²)	Included Cable No.	Conductor Type
2T24	E-114, E-182	610	152.4 mm siderail ladder tray	2284.74	18064.48	LP219-2,4	1-3/C + gnd #6,600 V, EPR insulation
						LP219-6,8	1-3/C + gnd #6,600 V, EPR insulation
						Pull rope	Soft-Fiber Polyester
						UP204-7	1-2/C + gnd #8,600 V, EPR insulation
						UP204-1	1-2/C + gnd #10,600 V, EPR insulation
						UP204-8	1-2/C + gnd #8,600 V, EPR insulation
						2103	1-3/C + gnd #2,600 V, EPR insulation
						2095	1-3/C + gnd #2,600 V, EPR insulation
2T25	E-115, E-182	610	152.4 mm siderail ladder tray	3803.05	18064.48	UP205-7	1-2/C + gnd #8,600 V, EPR insulation
						UP205-1	1-2/C + gnd #10,600 V, EPR insulation
						LP220-6,8	1-3/C + gnd #6,600 V, EPR insulation
						LP220-2,4	1-3/C + gnd #6,600 V, EPR insulation
						Pull rope	Soft-Fiber Polyester
						S-3056-6	1-4/C #14,600 V, EPR insulation
						3	
						2202-2	1-3/C #14,600 V, EPR insulation
						2120-1	1-3/C #14,600 V, EPR insulation
						2204-2	1-3/C #16,600 V, EPR insulation
						2121-2	1-3/C #14,600 V, EPR insulation
						2096	1-3/C + gnd #2,600 V, EPR insulation
						2204-1	1-3/C #16,600 V, EPR insulation
						2104	1-3/C + gnd #2,600 V, EPR insulation
						UP205-8	1-2/C + gnd #8,600 V, EPR insulation
						2202-4	1-3/C #14,600 V, EPR insulation
						2202-3	1-7/C #16,600 V, EPR insulation
						2120-2	1-3/C #14,600 V, EPR insulation
						2121-1	1-3/C #14,600 V, EPR insulation
2T26	E-117, E-183	610	152.4 mm siderail ladder tray	3296.85	18064.48	2202-1	1-2/C + gnd #8,600 V, EPR insulation
						CCTVE01BA	TVP
						LP221-2,4	1-3/C + gnd #6,600 V, EPR insulation
						Pull rope	Soft-Fiber Polyester
						CCTVE01AB	TVCP
						CCTVE01AA	TVP
						CCTVE01BB	TVCP
						LP221-6,8	1-3/C + gnd #6,600 V, EPR insulation
						UP206-7	1-2/C + gnd #8,600 V, EPR insulation
						UP207-1	1-2/C + gnd #10,600 V, EPR insulation
						UP206-1	1-2/C + gnd #10,600 V, EPR insulation
						2202-2	1-3/C #14,600 V, EPR insulation
						2105	1-3/C + gnd #2,600 V, EPR insulation
						2097	1-3/C + gnd #2,600 V, EPR insulation
						UP206-8	1-2/C + gnd #8,600 V, EPR insulation
						2202-4	1-3/C #14,600 V, EPR insulation
						2202-3	1-7/C #16,600 V, EPR insulation

For continuation, see next sheet.

CONDUIT AND TRAY SCHEDULE

E-418

STATE OF CALIFORNIA - DEPARTMENT OF TRANSPORTATION
Caltrans

DESIGN OVERSIGHT
BEHZAD GOLEMOHAMMADI

CALCULATED/ DESIGNED BY	PBP	DATE 8/02	REVISED BY
CHECKED BY	AB	8/02	DATE REVISED

LAST REVISION 00-00-00
DATE PLOTTED => 3/31/2009
TIME PLOTTED => 2:31:45 PM

FOR REDUCED PLANS ORIGINAL SCALE IS IN MILLIMETERS 0 20 40 60 80

DGN FILE =>T:\13103\MS\pse\SAS Struc\CCO\SAS CC055\04-0120f1_0373R03.dgn
USERNAME =>garciar

CU 04251 | EA 0120F1

DIST	COUNTY	ROUTE	KILOMETER POST TOTAL PROJECT	SHEET No	TOTAL SHEETS
04	SF	80	13.2/13.9	374 R3	1204

REGISTERED ELECTRICAL ENGINEER 12/19/02 DATE

12-6-04
PLANS APPROVAL DATE

REGISTERED PROFESSIONAL ENGINEER JENS ERLINGSSON No. 8249 Exp. 9/30/06 ELECTRICAL STATE OF CALIFORNIA

PB POWER, Inc.
A Parsons Brinckerhoff Company
303 Second St., Suite 700N
San Francisco, CA 94107-1317

The State of California or its officers or agents shall not be responsible for the accuracy or completeness of electronic copies of this plan sheet.

Caltrans now has a web site! To get to the web site, go to: http://www.dot.ca.gov

Caltrans Metric

REQUEST FOR INFORMATION NOT ADDRESSED IN THIS CCO REMAIN IN FORCE

MARK	DATE	DESCRIPTIONS	BY	CH'D	CCO#
3	03/30/09	SERVICE PLATFORM ELECTRICAL CHANGES	RY RR	RG MP	55
2	02/25/08	CABLE TRAY CHANGES	TW	RG	42S1
1	03/04/08	BARRIER MODIFICATIONS	JS BM	RG SE	44

REVISIONS

CONTRACT CHANGE ORDER NO._____
SHEET_____ OF_____

REGISTERED PROFESSIONAL ENGINEER S. A. ESTOQUE, JR. No. E-10151 Exp. 12/31/2008 ELECTRICAL STATE OF CALIFORNIA

FOR REVISION ONLY 1 2

REGISTERED PROFESSIONAL ENGINEER FADI WALIEDDINE No. 11465 Exp. 12/31/2009 ELECTRICAL STATE OF CALIFORNIA

FOR REVISION ONLY 3

CONDUIT DATA

Conduit No	Reference	Size	Type	Total Fill (mm²)	Allowable Fill (mm²)	Included Cable No.	Conductor Type
2T27	E-118, E-184	610	152.4 mm siderail ladder tray	2157.86	18064.48	LP222-6,8	1-3/C + gnd #6,600 V, EPR insulation
						2098	1-3/C + gnd #2,600 V, EPR insulation
						2106	1-3/C + gnd #2,600 V, EPR insulation
						UP207-8	1-2/C + gnd #8,600 V, EPR insulation
						UP207-7	1-2/C + gnd #8,600 V, EPR insulation
						Pull rope	Soft-Fiber Polyester
						LP222-2,4	1-3/C + gnd #6,600 V, EPR insulation
2T28	E-119, E-185	610	152.4 mm siderail ladder tray	3847.88	18064.48		3
						UP208-6	1-2/C + gnd #8,600 V, EPR insulation
						Pull rope	Soft-Fiber Polyester
						LP223-2,4	1-3/C + gnd #6,600 V, EPR insulation
							3
						UP208-7	1-2/C + gnd #8,600 V, EPR insulation
						2107	1-3/C + gnd #2,600 V, EPR insulation
						LP223-6,8	1-3/C + gnd #6,600 V, EPR insulation
						2201-5	1-3/C #14,600 V, EPR insulation
						UP208-8	1-2/C + gnd #8,600 V, EPR insulation
						1118-1	1-3/C #14,600 V, EPR insulation
						2201-6	1-2/C + gnd #8,600 V, EPR insulation
						S-3056-9	1-4/C #14,600 V, EPR insulation
						2099	1-3/C + gnd #2,600 V, EPR insulation
						1118-2	1-3/C #16,600 V, EPR insulation
						2201-3	1-3/C #14,600 V, EPR insulation
						2201-2	1-2/C + gnd #8,600 V, EPR insulation
						2201-4	1-9/C #16,600 V, EPR insulation
2T29	E-212, E-21B	610	152.4 mm siderail ladder tray	16623.79	18064.48	2123-3	1-3/C + gnd #2/0,600 V, EPR insulation
						Pull rope	Soft-Fiber Polyester
						2119-A	1-3/C + gnd 250 kcmil,600 V, EPR insulation
						2121	1-3/C + gnd #1/0,600 V, EPR insulation
						A-3004-1	1-3/C + gnd #2,600 V, EPR insulation
						A-3003-1	1-3/C + gnd #4,600 V, EPR insulation
						A-2012-1	1-3/C + gnd #2,600 V, EPR insulation
						2123	1-3/C + gnd #2,600 V, EPR insulation
						2105	1-3/C + gnd #2,600 V, EPR insulation
						2104	1-3/C + gnd #2,600 V, EPR insulation
						2125	1-3/C + gnd 250 kcmil,600 V, EPR insulation
						2123-2	1-3/C + gnd #2/0,600 V, EPR insulation
						2106	1-3/C + gnd #2,600 V, EPR insulation
						1118	1-3/C + gnd #2/0,600 V, EPR insulation
						2095	1-3/C + gnd #2,600 V, EPR insulation
						2096	1-3/C + gnd #2,600 V, EPR insulation
						2097	1-3/C + gnd #2,600 V, EPR insulation
						2098	1-3/C + gnd #2,600 V, EPR insulation
						2099	1-3/C + gnd #2,600 V, EPR insulation
						2103	1-3/C + gnd #2,600 V, EPR insulation
						2107	1-3/C + gnd #2,600 V, EPR insulation
						A-3041-1	1-3/C + gnd #2,600 V, EPR insulation
						S-3053-1	1-3/C + gnd #2,600 V, EPR insulation
						S-3052-1	1-3/C + gnd #2,600 V, EPR insulation
						2120	1-3/C + gnd #1/0,600 V, EPR insulation
						A-2013-1	1-3/C + gnd #2,600 V, EPR insulation
2T33	3 E-114B	760	152.4 mm siderail ladder tray	19081.45	22580.60	A-2011-1	1-3/C + gnd #2,600 V, EPR insulation
						UP208-2A	1-2/C + gnd #8,600 V, EPR insulation
							3
						UP208-4A	1-2/C + gnd #8,600 V, EPR insulation
						UP208-6	1-2/C + gnd #8,600 V, EPR insulation
						Pull rope	Soft-Fiber Polyester
						LP219-2,4	1-3/C + gnd #6,600 V, EPR insulation
						LP219-6,8	1-3/C + gnd #6,600 V, EPR insulation
						LP220-2,4	1-3/C + gnd #6,600 V, EPR insulation
						LP220-6,8	1-3/C + gnd #6,600 V, EPR insulation
						LP221-2,4	1-3/C + gnd #6,600 V, EPR insulation
						A-3057-1	1-3/C + gnd #2,600 V, EPR insulation
						A-2014-1	1-3/C + gnd #2,600 V, EPR insulation
						UP204-8	1-2/C + gnd #8,600 V, EPR insulation
						UP205-8	1-2/C + gnd #8,600 V, EPR insulation
						UP207-8	1-2/C + gnd #8,600 V, EPR insulation
						UP205-1	1-2/C + gnd #10,600 V, EPR insulation
						UP207-7	1-2/C + gnd #8,600 V, EPR insulation
						A-3039-3	1-3/C + gnd #6,600 V, EPR insulation
						A-3040-3	1-3/C + gnd #6,600 V, EPR insulation
						A-3005-1	1-3/C + gnd #2,600 V, EPR insulation
						A-3006-1	1-3/C + gnd #4,600 V, EPR insulation
						A-3031-1	1-3/C + gnd #4,600 V, EPR insulation

CONDUIT DATA

Conduit No	Reference	Size	Type	Total Fill (mm²)	Allowable Fill (mm²)	Included Cable No.	Conductor Type
						A-3032-1	1-3/C + gnd #4,600 V, EPR insulation
						A-3039-1	1-3/C + gnd #2,600 V, EPR insulation
						A-3040-1	1-3/C + gnd #2,600 V, EPR insulation
						LP221-6,8	1-3/C + gnd #6,600 V, EPR insulation
						UP204-1	1-2/C + gnd #10,600 V, EPR insulation
						UP206-8	1-2/C + gnd #8,600 V, EPR insulation
						S-2032-1	1-3/C + gnd #4,600 V, EPR insulation
						A-3036-1	1-3/C + gnd #4,600 V, EPR insulation
						A-2035-1	1-3/C + gnd #6,600 V, EPR insulation
						A-2035-3	1-3/C + gnd #6,600 V, EPR insulation
						UP205-7	1-2/C + gnd #8,600 V, EPR insulation
						UP206-7	1-2/C + gnd #8,600 V, EPR insulation
						LP223-2,4	1-3/C + gnd #6,600 V, EPR insulation
						LP222-6,8	1-3/C + gnd #6,600 V, EPR insulation
						A-3035-1	1-3/C + gnd #4,600 V, EPR insulation
						A-3034-1	1-3/C + gnd #2,600 V, EPR insulation
							3
						UP207-1	1-2/C + gnd #10,600 V, EPR insulation
						S-2031-1	1-3/C + gnd #2,600 V, EPR insulation
						UP206-1	1-2/C + gnd #10,600 V, EPR insulation
						1118-1	1-3/C #14,600 V, EPR insulation
						1118-2	1-3/C #16,600 V, EPR insulation
						1201-2	1-2/C + gnd #8,600 V, EPR insulation
						LP223-6,8	1-3/C + gnd #6,600 V, EPR insulation
						UP208-7	1-2/C + gnd #8,600 V, EPR insulation
						LP222-2,4	1-3/C + gnd #6,600 V, EPR insulation
						1201-6	1-2/C + gnd #8,600 V, EPR insulation
						A-3043-1	1-3/C + gnd #2,600 V, EPR insulation
						A-3042-1	1-3/C + gnd #2,600 V, EPR insulation
						2119-B	1-3/C + gnd 250 kcmil,600 V, EPR insulation
						A-3033-1	1-3/C + gnd #2,600 V, EPR insulation
						UP208-8	1-2/C + gnd #8,600 V, EPR insulation
2T39	E-212, E-21	610	152.4 mm siderail ladder tray	9889.17	18064.48	A-3032-1	1-3/C + gnd #4,600 V, EPR insulation
						2119-B	1-3/C + gnd 250 kcmil,600 V, EPR insulation
						A-2035-1	1-3/C + gnd #6,600 V, EPR insulation
						S-2032-1	1-3/C + gnd #4,600 V, EPR insulation
						S-2031-1	1-3/C + gnd #2,600 V, EPR insulation
						A-3036-1	1-3/C + gnd #4,600 V, EPR insulation
						A-3035-1	1-3/C + gnd #4,600 V, EPR insulation
						A-3034-1	1-3/C + gnd #2,600 V, EPR insulation
						A-3033-1	1-3/C + gnd #2,600 V, EPR insulation
						Pull rope	Soft-Fiber Polyester
						A-3039-1	1-3/C + gnd #2,600 V, EPR insulation
						A-3042-1	1-3/C + gnd #2,600 V, EPR insulation
						A-3031-1	1-3/C + gnd #4,600 V, EPR insulation
						A-3006-1	1-3/C + gnd #4,600 V, EPR insulation
						A-3005-1	1-3/C + gnd #2,600 V, EPR insulation
						A-2014-1	1-3/C + gnd #2,600 V, EPR insulation
						A-2011-1	1-3/C + gnd #2,600 V, EPR insulation
						A-3057-1	1-3/C + gnd #2,600 V, EPR insulation
						A-3043-1	1-3/C + gnd #2,600 V, EPR insulation
						A-3040-1	1-3/C + gnd #2,600 V, EPR insulation

For continuation, see next sheet.

CONDUIT AND TRAY SCHEDULE

E-419

STATE OF CALIFORNIA - DEPARTMENT OF TRANSPORTATION
Caltrans

DESIGN OVERSIGHT
BEHZAD GOLEMOHAMMADI

CALCULATED/DESIGNED BY PBP
CHECKED BY AB
DATE 8/02 8/02
REVISED BY DATE REVISED

LAST REVISION 00-00-00
DATE PLOTTED => 3/31/2009
TIME PLOTTED => 2:31:02 PM

FOR REDUCED PLANS ORIGINAL SCALE IS IN MILLIMETERS 0 20 40 60 80

DGN FILE =>T:\13103\MS\pse\SAS Struc\CCO\SAS CCO55\04-0120f1_0374R03.dgn
USERNAME =>garciar

CU 04251 EA 0120F1

CONDUIT DATA

Conduit No	Reference	Size	Type	Total Fill (mm2)	Allowable Fill (mm2)	Included Cable No.	Conductor Type
2T43	E-114B △3	610		10659.55	38709.60	2900-152C	4 pair #22, shielded pairs, FEP insulation
						2900-292A	4 pair #22, shielded pairs, FEP insulation
						2900-272C	4 pair #22, shielded pairs, FEP insulation
						2900-272B	4 pair #22, shielded pairs, FEP insulation
						2900-272A	4 pair #22, shielded pairs, FEP insulation
						2900-192C	4 pair #22, shielded pairs, FEP insulation
						2900-192B	4 pair #22, shielded pairs, FEP insulation
						2900-192A	4 pair #22, shielded pairs, FEP insulation
						2900-172C	4 pair #22, shielded pairs, FEP insulation
						2900-172B	4 pair #22, shielded pairs, FEP insulation
						2900-172A	4 pair #22, shielded pairs, FEP insulation
						1473-6	50 pair #18, shielded pairs, IS/OS shield 600 V, XLPE insul., PVC jacket
						2900-162A	4 pair #22, shielded pairs, FEP insulation
						2900-332C	4 pair #22, shielded pairs, FEP insulation
						2900-152B	4 pair #22, shielded pairs, FEP insulation
						2900-152A	4 pair #22, shielded pairs, FEP insulation
						2900-142A	4 pair #22, shielded pairs, FEP insulation
						2910-8	4 pair #22, shielded pairs, 300 V, PE insulation
						2119-2	4 pair #22, shielded pairs, 300 V, PE insulation
						2475-3C	12 Fiber, single mode fiberoptic cable
						MVDSE03A	MVDS DLC
						MVDSE01A	MVDS DLC
						MVDSE02A	MVDS DLC
						2154	1 - 2 pair, shielded #18 with IS/OA, 300 V, PVC jacket
						2900-162B	4 pair #22, shielded pairs, FEP insulation
						2900-442A	4 pair #22, shielded pairs, FEP insulation
						2474-10	50 pair #18, shielded pairs, IS/OS shield 600 V, XLPE insul., PVC jacket
						1474-6	50 pair #18, shielded pairs, IS/OS shield 600 V, XLPE insul., PVC jacket
						1473-4	50 pair #18, shielded pairs, IS/OS shield 600 V, XLPE insul., PVC jacket
						2910-7	4 pair #24, overall shielded, 300V, PE insulation
						2910-3	4 pair #22, shielded pairs, FEP insulation
						2910-2	4 pair #22, shielded pairs, FEP insulation
						2910-12	4 pair #22, shielded pairs, 300 V, PE insulation
						2910-11	1-3/C #16,600 V, EPR insulation
						2900-482A	4 pair #22, shielded pairs, FEP insulation
						2900-452B	4 pair #22, shielded pairs, FEP insulation
						2900-452A	4 pair #22, shielded pairs, FEP insulation
						2900-332A	4 pair #22, shielded pairs, FEP insulation
						2900-442B	4 pair #22, shielded pairs, FEP insulation
						2900-332B	4 pair #22, shielded pairs, FEP insulation
						2900-432A	4 pair #22, shielded pairs, FEP insulation
						2900-422B	4 pair #22, shielded pairs, FEP insulation
						2900-422A	4 pair #22, shielded pairs, FEP insulation
						2900-412C	4 pair #22, shielded pairs, FEP insulation
						2900-412B	4 pair #22, shielded pairs, FEP insulation
						2900-412A	4 pair #22, shielded pairs, FEP insulation
						2900-402A	4 pair #22, shielded pairs, FEP insulation
						2900-382C	4 pair #22, shielded pairs, FEP insulation
						2900-382B	4 pair #22, shielded pairs, FEP insulation
						2900-382A	4 pair #22, shielded pairs, FEP insulation
						2148	1 - 2 pair, shielded #18 with IS/OA, 300 V, PVC jacket
						2900-442C	4 pair #22, shielded pairs, FEP insulation
						CCTVE01AD	TVL
						1473-8	50 pair #18, shielded pairs, IS/OS shield 600 V, XLPE insul., PVC jacket
						Pull rope	Soft-Fiber Polyester
						2475-3A	12 Fiber, single mode fiberoptic cable
						2475-3B	12 Fiber, single mode fiberoptic cable
						2475-3	72 Fiber, single mode fiberoptic riser cable
						CCTVE01BC	TVC
						CCTVE01BD	TVL
						CCTVE01AC	TVC
						2900-432B	4 pair #22, shielded pairs, FEP insulation
						MVDSW03A	MVDS DLC

REQUEST FOR INFORMATION NOT ADDRESSED IN THIS CCO REMAIN IN FORCE

MARK	DATE	DESCRIPTIONS	BY	CH'D	CCO#
△3	03/30/09	SERVICE PLATFORM ELECTRICAL CHANGES	RY RR	RG MP	55
△2	02/25/08	CABLE TRAY CHANGES	TW	RG	42S1
△1	03/04/08	BARRIER MODIFICATIONS	JS BM	RG	44

REVISIONS

CONTRACT CHANGE ORDER NO._____
SHEET_____ OF_____

REGISTERED PROFESSIONAL ENGINEER S. A. ESTOQUE, JR. No. E-10151 Exp. 12/31/2008 ELECTRICAL STATE OF CALIFORNIA

FOR REVISION ONLY △1 △2

REGISTERED PROFESSIONAL ENGINEER FADI WALIEDDINE No. 11465 Exp. 12/31/2009 ELECTRICAL STATE OF CALIFORNIA

FOR REVISION ONLY △3

Caltrans Metric

DIST	COUNTY	ROUTE	KILOMETER POST TOTAL PROJECT	SHEET No	TOTAL SHEETS
04	SF	80	13.2/13.9	375 R3	1204

REGISTERED ELECTRICAL ENGINEER 12/19/02 DATE

12-6-04
PLANS APPROVAL DATE

REGISTERED PROFESSIONAL ENGINEER JENS ERLINGSSON No. 8249 Exp. 9/30/06 ELECTRICAL STATE OF CALIFORNIA

PB POWER, Inc.
A Parsons Brinckerhoff Company
303 Second St., Suite 700N
San Francisco, CA 94107-1317

The State of California or its officers or agents shall not be responsible for the accuracy or completeness of electronic copies of this plan sheet.

Caltrans now has a web site! To get to the web site, go to: http://www.dot.ca.gov

CONDUIT DATA

Conduit No	Reference	Size	Type	Total Fill (mm2)	Allowable Fill (mm2)	Included Cable No.	Conductor Type
						MVDSW03A	MVDS DLC
2T44	E-115, E-182	610	152.4 mm siderail solid bottom tray	5109.21	38709.60	2119-2	4 pair #22, shielded pairs, 300 V, PE insulation
						1473-4	50 pair #18, shielded pairs, IS/OS shield 600 V, XLPE insul., PVC jacket
						1474-5	50 pair #18, shielded pairs, IS/OS shield 600 V, XLPE insul., PVC jacket
						1474-4	50 pair #18, shielded pairs, IS/OS shield 600 V, XLPE insul., PVC jacket
						Pull rope	Soft-Fiber Polyester
						MVDSE01A	MVDS DLC
						2475-3A	12 Fiber, single mode fiberoptic cable
						1473-5	50 pair #18, shielded pairs, IS/OS shield 600 V, XLPE insul., PVC jacket
2T45	E-115, E-182	610	152.4 mm siderail solid bottom tray	7529.12	38709.60	2900-432B	4 pair #22, shielded pairs, FEP insulation
						2910-12	4 pair #22, shielded pairs, 300 V, PE insulation
						Pull rope	Soft-Fiber Polyester
						2900-412A	4 pair #22, shielded pairs, FEP insulation
						2910-11	1-3/C #16,600 V, EPR insulation
						2910-7	4 pair #24, overall shielded, 30V, PE insulation
						2910-10	4 pair #22, shielded pairs, 300 V, PE insulation
						2910-8	4 pair #22, shielded pairs, 300 V, PE insulation
						2900-422B	4 pair #22, shielded pairs, FEP insulation
						2900-422A	4 pair #22, shielded pairs, FEP insulation
						2900-412C	4 pair #22, shielded pairs, FEP insulation
						2900-412B	4 pair #22, shielded pairs, FEP insulation
						2900-382C	4 pair #22, shielded pairs, FEP insulation
						2900-402A	4 pair #22, shielded pairs, FEP insulation
						2900-272C	4 pair #22, shielded pairs, FEP insulation
						2900-382B	4 pair #22, shielded pairs, FEP insulation
						2900-382A	4 pair #22, shielded pairs, FEP insulation
						2900-332C	4 pair #22, shielded pairs, FEP insulation
						2900-332B	4 pair #22, shielded pairs, FEP insulation
						2900-332A	4 pair #22, shielded pairs, FEP insulation
						2900-292A	4 pair #22, shielded pairs, FEP insulation
						2900-172A	4 pair #22, shielded pairs, FEP insulation
						2900-192B	4 pair #22, shielded pairs, FEP insulation
						2900-142A	4 pair #22, shielded pairs, FEP insulation
						1474-5A	1 - 6 pair, shielded #18 with overall shield, 300 V, PVC jacket
						2910-3	4 pair #22, shielded pairs, FEP insulation
						2910-2	4 pair #22, shielded pairs, FEP insulation
						2900-482A	4 pair #22, shielded pairs, FEP insulation
						2900-452B	4 pair #22, shielded pairs, FEP insulation
						2155	1 - 2 pair, shielded #18 with IS/OA, 300 V, PVC jacket

For continuation, see next sheet

CONDUIT AND TRAY SCHEDULE

E-420

STATE OF CALIFORNIA - DEPARTMENT OF TRANSPORTATION
Caltrans

DESIGN OVERSIGHT
BEHZAD GOLEMOHAMMADI

CALCULATED/DESIGNED BY PBP
CHECKED BY AB
DATE 8/02 8/02
REVISED BY DATE REVISED

LAST REVISION 00-00-00
DATE PLOTTED => 3/31/2009
TIME PLOTTED => 2:30:25 PM

DIST	COUNTY	ROUTE	KILOMETER POST TOTAL PROJECT	SHEET No	TOTAL SHEETS
04	SF	80	13.2/13.9	386 R2	1204

REGISTERED ELECTRICAL ENGINEER 12/19/02 DATE

12-6-04
PLANS APPROVAL DATE

REGISTERED PROFESSIONAL ENGINEER JENS ERLINGSSON No. 8249 Exp. 9/30/06 ELECTRICAL STATE OF CALIFORNIA

PB POWER, Inc.
A Parsons Brinckerhoff Company
303 Second St., Suite 700N
San Francisco, CA 94107-1317

The State of California or its officers or agents shall not be responsible for the accuracy or completeness of electronic copies of this plan sheet.

Caltrans now has a web site! To get to the web site, go to http://www.dot.ca.gov

Caltrans Metric

REQUEST FOR INFORMATION NOT ADDRESSED IN THIS CCO REMAIN IN FORCE

MARK	DATE	DESCRIPTIONS	BY	CH'D	CCO#
2	03/30/09	SERVICE PLATFORM ELECTRICAL CHANGES	RR RY	RG MP	55
1	03/04/08	BARRIER MODIFICATIONS	JS BM	RG SE	44

REVISIONS

CONTRACT CHANGE ORDER NO._____
SHEET_____ OF_____

REGISTERED PROFESSIONAL ENGINEER S. A. ESTOQUE, JR. No. E-10151 Exp. 12/31/2008 ELECTRICAL STATE OF CALIFORNIA

FOR REVISION ONLY 1

REGISTERED PROFESSIONAL ENGINEER FADI WALIEDDINE No. 11465 Exp. 12/31/2009 ELECTRICAL STATE OF CALIFORNIA

FOR REVISION ONLY 2

CONDUIT DATA

Conduit No	Reference	Size	Type	Total Fill (mm²)	Allowable Fill (mm²)	Included Cable No.	Conductor Type
3702	E-284, E-275	78	RGS-PVC coated conduit	436.32	1935.24	UP210-1B-1B	2 + 1 gnd #8,#10, 600 V, RHH/RHW insulation
						UP210-1B-2	2 + 1 gnd #12,#12, 600 V, RHH/RHW insulation
						Pull rope	Soft-Fiber Polyester
3703	E-284	53	RGS-PVC coated conduit	725.01	879.42	UP210-1B-3	2 + 1 gnd #8,#10, 600 V, RHH/RHW insulation
						UP210-1B-4	2 + 1 gnd #12,#12, 600 V, RHH/RHW insulation
						Pull rope	Soft-Fiber Polyester
						UP210-1B-3C	2 + 1 gnd #8,#10, 600 V, RHH/RHW insulation
3704	E-284, E-285	53	RGS-PVC coated conduit	436.32	879.42	UP210-1B-4	2 + 1 gnd #12,#12, 600 V, RHH/RHW insulation
						UP210-1B-3C	2 + 1 gnd #8,#10, 600 V, RHH/RHW insulation
						UP210-1B-3A	2 + 1 gnd #8,#10, 600 V, RHH/RHW insulation
						Pull rope	Soft-Fiber Polyester
3705	E-284, E-275	53	RGS-PVC coated conduit	315.59	879.42	UP210-1B-3B	2 + 1 gnd #8,#10, 600 V, RHH/RHW insulation
						UP210-1B-4	2 + 1 gnd #12,#12, 600 V, RHH/RHW insulation
						Pull rope	Soft-Fiber Polyester
						UP210-1B-3C	2 + 1 gnd #8, #10, 600 V, RHH/RHW insulation
3706	E-284, E-275	53	RGS-PVC coated conduit	241.67	879.42	UP210-1B-5	2 + 1 gnd #8, #10, 600 V, RHH/RHW insulation
						UP210-1B-5C	2 + 1 gnd #8, #10, 600 V, RHH/RHW insulation
						UP210-1B-6	2 + 1 gnd #12, #12, 600 V, RHH/RHW insulation
					2	Pull rope	Soft-Fiber Polyester
3707	E-284, E-275	53	RGS-PVC coated conduit	241.67	879.42	UP210-1B-6	2 + 1 gnd #12, #12 600 V, RHH/RHW insulation
						UP210-1B-5A	2 + 1 gnd #8, #10, 600 V, RHH/RHW insulation
						UP210-1B-5C	2 + 1 gnd #8, #10, 600 V, RHH/RHW insulation
					2	Pull rope	Soft-Fiber Polyester
3708	E-284, E-275	53	RGS-PVC coated conduit	241.67	879.42	UP210-1B-5B	2 + 1 gnd #8, #10, 600 V, RHH/RHW insulation
						UP210-1B-5C	2 + 1 gnd #8, #10, 600 V, RHH/RHW insulation
						UP210-1B-6	2 + 1 gnd #12, #12, 600 V, RHH/RHW insulation
					2	Pull rope	Soft-Fiber Polyester
3800	E-284, E-275	53	RGS-PVC coated conduit	387.11	879.42	UP210-1B-8	2 + 1 gnd #12,#12, 600 V, RHH/RHW insulation
						Pull rope	Soft-Fiber Polyester
						UP210-1B-7	2 + 1 gnd #8,#10, 600 V, RHH/RHW insulation
						UP210-1B-7C	2 + 1 gnd #8,#10, 600 V, RHH/RHW insulation
3801	E-284	53	RGS-PVC coated conduit	483.34	879.42	UP210-1B-8	2 + 1 gnd #12,#12, 600 V, RHH/RHW insulation
						Pull rope	Soft-Fiber Polyester
						UP210-1B-7A	2 + 1 gnd #8,#10, 600 V, RHH/RHW insulation
						UP210-1B-7C	2 + 1 gnd #8,#10, 600 V, RHH/RHW insulation
3802	E-284, E-275	78	RGS-PVC coated conduit	436.32	1935.24	Pull rope	Soft-Fiber Polyester
						UP210-1B-8	2 + 1 gnd #12,#12, 600 V, RHH/RHW insulation
						UP210-1B-7C	2 + 1 gnd #8,#10, 600 V, RHH/RHW insulation
						UP210-1B-7B	2 + 1 gnd #8,#10, 600 V, RHH/RHW insulation
3803	E-284, E-275	53	RGS-PVC coated conduit	725.01	879.42	UP210-1B-10	2 + 1 gnd #12,#12, 600 V, RHH/RHW insulation
						Pull rope	Soft-Fiber Polyester
						UP210-1B-9	2 + 1 gnd #8,#10, 600 V, RHH/RHW insulation
						UP210-1B-9C	2 + 1 gnd #8,#10, 600 V, RHH/RHW insulation
3804	E-284, E-285	78	RGS-PVC coated conduit	436.32	1935.24	Pull rope	Soft-Fiber Polyester
						UP210-1B-10	2 + 1 gnd #12,#12, 600 V, RHH/RHW insulation
						UP210-1B-9A	2 + 1 gnd #8,#10, 600 V, RHH/RHW insulation
						UP210-1B-9C	2 + 1 gnd #8,#10, 600 V, RHH/RHW insulation
3805	E-284, E-275	53	RGS-PVC coated conduit	337.90	879.42	UP210-1B-10	2 + 1 gnd #12,#12, 600 V, RHH/RHW insulation
						Pull rope	Soft-Fiber Polyester
						UP210-1B-9B	2 + 1 gnd #8,#10, 600 V, RHH/RHW insulation
						UP210-1B-9C	2 + 1 gnd #8,#10, 600 V, RHH/RHW insulation
3806	E-284, E-275	53	RGS-PVC coated conduit	241.67	879.42	UP210-1B-12	2 + 1 gnd #12, #12, 600 V, RHH/RHW insulation
						UP210-1B-11	2 + 1 gnd #8, #10, 600 V, RHH/RHW insulation
						UP210-1B-11C	2 + 1 gnd #8, #10, 600 V, RHH/RHW insulation
					2	Pull rope	Soft-Fiber Polyester
3807	E-284, E-275	53	RGS-PVC coated conduit	241.67	879.42	UP210-1B-11A	2 + 1 gnd #8, #10, 600 V, RHH/RHW insulation
						UP210-1B-11C	2 + 1 gnd #8, #10, 600 V, RHH/RHW insulation
						UP210-1B-12	2 + 1 gnd #12, #12, 600 V, RHH/RHW insulation
					2	Pull rope	Soft-Fiber Polyester

CONDUIT DATA

Conduit No	Reference	Size	Type	Total Fill (mm²)	Allowable Fill (mm²)	Included Cable No.	Conductor Type
3808	E-284, E-275	53	RGS-PVC coated conduit	241.67	879.42	UP210-1B-12	2 + 1 gnd #12, #12, 600 V, RHH/RHW insulation
						UP210-1B-11B	2 + 1 gnd #8, #10, 600 V, RHH/RHW insulation
						UP210-1B-11C	2 + 1 gnd #8, #10, 600 V, RHH/RHW insulation
2 4007A	E-71A	78	Liquidtight Flex. Metal Cond.		1935.24	Pull rope	Soft-Fiber Polyester
4009	E-71A 2	53	Liquidtight Flex. Metal Cond.	60.80	879.42	Pull rope	Soft-Fiber Polyester
						UP104-5	2 + 1 gnd #10,#10, 600 V, RHH/RHW insulation
4010	E-71A	53	Liquidtight Flex. Metal Cond.	98.42	879.42	UP104-12	2 + 1 gnd #12,#12, 600 V, RHH/RHW insulation
						Pull rope	Soft-Fiber Polyester
						UP104-10	2 + 1 gnd #12,#12, 600 V, RHH/RHW insulation
4029	E-72A	78	Liquidtight Flex. Metal Cond.	1217.21	1935.24	1201-5	1-3/C #14,600 V, EPR insulation
						UP105-15	1-2/C + gnd #8,600 V, EPR insulation
			2			Pull rope	Soft-Fiber Polyester
						1201-4	1-9/C #16,600 V, EPR insulation
						1201-3	1-3/C #14,600 V, EPR insulation
						1201-1	1-2/C + gnd #8,600 V, EPR insulation
						1201-6	1-2/C + gnd #8,600 V, EPR insulation
						1201-2	1-2/C + gnd #8,600 V, EPR insulation
					2		
					2		
			2				
4033	E-72A 2	53	Liquidtight Flex. Metal Cond.	481.89	879.42	Pull rope	Soft-Fiber Polyester
						UP105-5	2 + 1 gnd #12,#12, 600 V, RHH/RHW insulation
						UP105-13	1-2/C + gnd #12,600 V, EPR insulation
						UP105-11	1-2/C + gnd #12,600 V, EPR insulation
						UP105-15	1-2/C + gnd #8,600 V, EPR insulation
4034	E-72A	53	Liquidtight Flex. Metal Cond.	0.00	879.42	Pull rope	Soft-Fiber Polyester
4036	E-73A	53	Liquidtight Flex. Metal Cond.	276.67	879.42	UP106-5	2 + 1 gnd #12,#12, 600 V, RHH/RHW insulation
							1-2/C + gnd #8,600 V, EPR insulation
						Pull rope	Soft-Fiber Polyester

For continuation, see next sheet.

CONDUIT AND TRAY SCHEDULE

E-431

DESIGN OVERSIGHT
BEHZAD GOLEMOHAMMADI

CALCULATED/DESIGNED BY PBP
CHECKED BY AB
REVISED BY DATE 8/02
DATE REVISED 8/02

STATE OF CALIFORNIA - DEPARTMENT OF TRANSPORTATION
Caltrans

LAST REVISION 00-00-00
DATE PLOTTED => 3/31/2009
TIME PLOTTED => 2:29:52 PM

FOR REDUCED PLANS ORIGINAL SCALE IS IN MILLIMETERS 0 20 40 60 80

DGN FILE =>T:\13103\MS\pse\SAS Struc\CCO\SAS CC055\04-0120f1_0386R02.dgn
USERNAME =>garciar

CU 04251 EA 0120F1

DIST	COUNTY	ROUTE	KILOMETER POST TOTAL PROJECT	SHEET No	TOTAL SHEETS
04	SF	80	13.2/13.9	387 R2	1204

REGISTERED ELECTRICAL ENGINEER 12/19/02 DATE

12-6-04
PLANS APPROVAL DATE

PB POWER, Inc.
A Parsons Brinckerhoff Company
303 Second St., Suite 700N
San Francisco, CA 94107-1317

The State of California or its officers or agents shall not be responsible for the accuracy or completeness of electronic copies of this plan sheet.

Caltrans now has a web site! To get to the web site, go to http://www.dot.ca.gov

REGISTERED PROFESSIONAL ENGINEER JENS ERLINGSSON No. 8249 Exp. 9/30/06 ELECTRICAL STATE OF CALIFORNIA

REQUEST FOR INFORMATION NOT ADDRESSED IN THIS CCO REMAIN IN FORCE

MARK	DATE	DESCRIPTIONS	BY	CH'D	CCO#
2	03/30/09	SERVICE PLATFORM ELECTRICAL CHANGES	RR RY	RG MP	55
1	03/04/08	BARRIER MODIFICATIONS	JS BM	RG SE	44

REVISIONS

CONTRACT CHANGE ORDER NO._____
SHEET_____ OF_____

REGISTERED PROFESSIONAL ENGINEER S. A. ESTOQUE, JR. No. E-10151 Exp. 12/31/2008 ELECTRICAL STATE OF CALIFORNIA
FOR REVISION ONLY 1

REGISTERED PROFESSIONAL ENGINEER FADI WALIEDDINE No. 11465 Exp. 12/31/2009 ELECTRICAL STATE OF CALIFORNIA
FOR REVISION ONLY 2

CONDUIT DATA

Conduit No	Reference	Size	Type	Total Fill (mm²)	Allowable Fill (mm²)	Included Cable No.	Conductor Type
4037	E-73A 2	53	Liquidtight Flex. Metal Cond.	227.46	879.42	Pull rope	Soft-Fiber Polyester
						UP106-10	1-2/c + gnd #8,600 V, EPR insulation
							2
4040	E-73A 2	78	Liquidtight Flex. Metal Cond.	727.89	1935.24	1202-3	1-7/C #16,600 V, EPR insulation
						Pull rope	Soft-Fiber Polyester
			2			1202-4	1-3/C #14,600 V, EPR insulation
						1202-2	1-3/C #14,600 V, EPR insulation
						UP106-15	1-2/c + gnd #8,600 V, EPR insulation
						1202-1	1-2/c + gnd #8,600 V, EPR insulation
	2						
			2				
4076	E-74A 2	53	Liquidtight Flex. Metal Cond.	49.21	879.42	UP107-5	2 + 1 gnd #12,#12, 600 V, RHH/RHW insulation
						Pull rope	Soft-Fiber Polyester
4077	E-74A 2	53	Liquidtight Flex. Metal Cond.	205.22	879.42	UP107-10	1-2/c + gnd #12,600 V, EPR insulation
						UP207-10	1-3/C #12,600 V, EPR insulation
						Pull rope	Soft-Fiber Polyester
							2
4101	E-75A 2	53	Liquidtight Flex. Metal Cond.	254.43	879.42	Pull rope	Soft-Fiber Polyester
						UP108-5	2 + 1 gnd #12,#12, 600 V, RHH/RHW insulation
			2			UP108-17	1-2/c + gnd #12,600 V, EPR insulation
			2			UP108-11	1-2/c + gnd #12,600 V, EPR insulation
4102	E-75A 2	53	Liquidtight Flex. Metal Cond.	0.00	879.42	Pull rope	Soft-Fiber Polyester
4104	E-75A	78	Liquidtight Flex. Metal Cond.	1217.21	2564.19	2201-4	1-9/C #16,600 V, EPR insulation
						2201-2	1-2/c + gnd #8,600 V, EPR insulation
						2201-3	1-3/C #14,600 V, EPR insulation
						Pull rope	Soft-Fiber Polyester
						UP208-15	1-2/c + gnd #8,600 V, EPR insulation
						2201-1	1-2/c + gnd #8,600 V, EPR insulation
						2201-6	1-2/c + gnd #8,600 V, EPR insulation
						2201-5	1-3/C #14,600 V, EPR insulation
					2		
4108	E-117	78	RGS-PVC coated conduit	0.00	1935.24	Pull rope	Soft-Fiber Polyester
4128	E-100	53	RGS conduit	0.00	879.42	Pull rope	Soft-Fiber Polyester
4148	E-100	53	RGS conduit	0.00	879.42	Pull rope	Soft-Fiber Polyester
4149	E-96	78	RGS conduit	648.58	1935.24	A-1011-2	1-3/c + gnd #6,600 V, EPR insulation
						A-1011-2	1-3/c + gnd #6,600 V, EPR insulation
						Pull rope	Soft-Fiber Polyester
4150	E-96	78	RGS conduit	648.58	1935.24	A-1011-2	1-3/c + gnd #6,600 V, EPR insulation
						A-1011-2	1-3/c + gnd #6,600 V, EPR insulation
						Pull rope	Soft-Fiber Polyester
4151	E-96	78	RGS conduit	648.58	1935.24	A-1011-2	1-3/c + gnd #6,600 V, EPR insulation
						A-1011-2	1-3/c + gnd #6,600 V, EPR insulation
						Pull rope	Soft-Fiber Polyester
4152	E-96	78	RGS conduit	648.58	1935.24	A-1011-2	1-3/c + gnd #6,600 V, EPR insulation
						A-1011-2	1-3/c + gnd #6,600 V, EPR insulation
						Pull rope	Soft-Fiber Polyester
4153	E-96	78	RGS conduit	648.58	1935.24	A-1011-2	1-3/c + gnd #6,600 V, EPR insulation
						A-1011-2	1-3/c + gnd #6,600 V, EPR insulation
						Pull rope	Soft-Fiber Polyester

CONDUIT DATA

Conduit No	Reference	Size	Type	Total Fill (mm²)	Allowable Fill (mm²)	Included Cable No.	Conductor Type
4154	E-96	78	RGS conduit	648.58	1935.24	A-1011-2	1-3/c + gnd #6,600V, EPR insulation
						A-1011-2	1-3/c + gnd #6,600 V, EPR insulation
					2	Pull rope	Soft-Fiber Polyester
4155	E-97	78	RGS conduit	648.58	1935.24	A-1011-2	1-3/c + gnd #6,600 V, EPR insulation
						A-1011-2	1-3/c + gnd #6,600 V, EPR insulation
					2	Pull rope	Soft-Fiber Polyester
4156	E-97	78	RGS conduit	648.58	1935.24	A-1011-2	1-3/c + gnd #6,600 V, EPR insulation
						A-1011-2	1-3/c + gnd #6,600 V, EPR insulation
					2	Pull rope	Soft-Fiber Polyester
4157	E-97	78	RGS conduit	648.58	1935.24	A-1011-2	1-3/c + gnd #6,600 V, EPR insulation
						A-1011-2	1-3/c + gnd #6,600 V, EPR insulation
					2	Pull rope	Soft-Fiber Polyester
4158	E-97	78	RGS conduit	648.58	1935.24	A-1011-2	1-3/c + gnd #6,600 V, EPR insulation
						A-1011-2	1-3/c + gnd #6,600 V, EPR insulation
					2	Pull rope	Soft-Fiber Polyester
4159	E-97	78	RGS conduit	648.58	1935.24	A-1011-2	1-3/c + gnd #6,600 V, EPR insulation
						A-1011-2	1-3/c + gnd #6,600 V, EPR insulation
					2	Pull rope	Soft-Fiber Polyester
4160	E-97	78	RGS conduit	851.47	1935.24	A-1012-2	1-3/c + gnd #2 ,600V, EPR insulation
						A-1012-2	1-3/c + gnd #6,600 V, EPR insulation
					2	Pull rope	Soft-Fiber Polyester
4161	E-97	78	RGS conduit	648.58	1935.24	A-1012-2	1-3/c + gnd #6,600 V, EPR insulation
						A-1012-2	1-3/c + gnd #6,600 V, EPR insulation
					2	Pull rope	Soft-Fiber Polyester
4162	E-97	78	RGS conduit	648.58	1935.24	A-1012-2	1-3/c + gnd #6,600 V, EPR insulation
						A-1012-2	1-3/c + gnd #6,600 V, EPR insulation
					2	Pull rope	Soft-Fiber Polyester
4163	E-98	78	RGS conduit	648.58	1935.24	A-1012-2	1-3/c + gnd #6,600 V, EPR insulation
						A-1012-2	1-3/c + gnd #6,600 V, EPR insulation
					2	Pull rope	Soft-Fiber Polyester
4164	E-98	78	RGS conduit	648.58	1935.24	A-1012-2	1-3/c + gnd #6,600 V, EPR insulation
						A-1012-2	1-3/c + gnd #6,600 V, EPR insulation
					2	Pull rope	Soft-Fiber Polyester
4165	E-98	78	RGS conduit	648.58	1935.24	A-1012-2	1-3/c + gnd #6,600 V, EPR insulation
						A-1012-2	1-3/c + gnd #6,600 V, EPR insulation
					2	Pull rope	Soft-Fiber Polyester
4166	E-98	78	RGS conduit	648.58	1935.24	A-1012-2	1-3/c + gnd #6,600 V, EPR insulation
						A-1012-2	1-3/c + gnd #6,600 V, EPR insulation
					2	Pull rope	Soft-Fiber Polyester
4167	E-98	78	RGS conduit	648.58	1935.24	A-1012-2	1-3/c + gnd #6,600 V, EPR insulation
						A-1012-2	1-3/c + gnd #6,600 V, EPR insulation
					2	Pull rope	Soft-Fiber Polyester
4168	E-98	78	RGS conduit	648.58	1935.24	A-1012-2	1-3/c + gnd #6,600 V, EPR insulation
						A-1012-2	1-3/c + gnd #6,600 V, EPR insulation
					2	Pull rope	Soft-Fiber Polyester
4169	E-98	78	RGS conduit	648.58	1935.24	A-1012-2	1-3/c + gnd #6,600 V, EPR insulation
						A-1012-2	1-3/c + gnd #6,600 V, EPR insulation
					2	Pull rope	Soft-Fiber Polyester
4170	E-98	78	RGS conduit	648.58	1935.24	A-1012-2	1-3/c + gnd #6,600 V, EPR insulation
						A-1012-2	1-3/c + gnd #6,600 V, EPR insulation
					2	Pull rope	Soft-Fiber Polyester
4171	E-98	78	RGS conduit	648.58	1935.24	A-1012-2	1-3/c + gnd #6,600 V, EPR insulation
						A-1012-2	1-3/c + gnd #6,600 V, EPR insulation
					2	Pull rope	Soft-Fiber Polyester

For continuation, see next sheet.

CONDUIT AND TRAY SCHEDULE

E-432

REVISED BY	DATE REVISED
PBP	8/02

CALCULATED/DESIGNED BY	CHECKED BY
AB	

DESIGN OVERSIGHT
BEHZAD GOLEMOHAMMADI

STATE OF CALIFORNIA - DEPARTMENT OF TRANSPORTATION
Caltrans

LAST REVISION 00-00-00
DATE PLOTTED => 3/31/2009
TIME PLOTTED => 2:29:16 PM

DIST	COUNTY	ROUTE	KILOMETER POST TOTAL PROJECT	SHEET No	TOTAL SHEETS
04	SF	80	13.2/13.9	388 R2	1204

REGISTERED ELECTRICAL ENGINEER 12/19/02 DATE

12-6-04
PLANS APPROVAL DATE

REGISTERED PROFESSIONAL ENGINEER JENS ERLINGSSON No. 8249 Exp. 9/30/06 ELECTRICAL STATE OF CALIFORNIA

PB POWER, Inc.
A Parsons Brinckerhoff Company
303 Second St., Suite 700N
San Francisco, CA 94107-1317

The State of California or its officers or agents shall not be responsible for the accuracy or completeness of electronic copies of this plan sheet.

Caltrans now has a web site! To get to the web site, go to http://www.dot.ca.gov

Caltrans Metric

REQUEST FOR INFORMATION NOT ADDRESSED IN THIS CCO REMAIN IN FORCE

MARK	DATE	DESCRIPTIONS	BY	CH'D	CCO#
2	03/30/09	SERVICE PLATFORM ELECTRICAL CHANGES	RR RY	RG MP	55
1	03/04/08	BARRIER MODIFICATIONS	JS BM	RG	44

REVISIONS

CONTRACT CHANGE ORDER NO._____
SHEET_____ OF _____

REGISTERED PROFESSIONAL ENGINEER S. A. ESTOQUE, JR No. E-10151 Exp. 12/31/2008 ELECTRICAL STATE OF CALIFORNIA

FOR REVISION ONLY 1

REGISTERED PROFESSIONAL ENGINEER FADI WALIEDDINE No. 11465 Exp. 12/31/2009 ELECTRICAL STATE OF CALIFORNIA

FOR REVISION ONLY 2

CONDUIT DATA

Conduit No	Reference	Size	Type	Total Fill (mm2)	Allowable Fill (mm2)	Included Cable No.	Conductor Type
4172	E-99	78	RGS conduit	851.47	1935.24	A-1013-2	1-3/c + gnd #6,600 V, EPR insulation
						A-1013-1	1-3/c + gnd #2,600V, EPR insulation
					2	Pull rope	Soft-Fiber Polyester
4173	E-99	78	RGS conduit	648.58	1935.24	A-1013-2	1-3/c + gnd #6,600 V, EPR insulation
						A-1013-2	1-3/c + gnd #6,600 V, EPR insulation
					2	Pull rope	Soft-Fiber Polyester
4174	E-99	78	RGS conduit	648.58	1935.24	A-1013-2	1-3/c + gnd #6,600 V, EPR insulation
						A-1013-2	1-3/c + gnd #6,600 V, EPR insulation
					2	Pull rope	Soft-Fiber Polyester
4175	E-99	78	RGS conduit	648.58	1935.24	A-1013-2	1-3/c + gnd #6,600 V, EPR insulation
						A-1013-2	1-3/c + gnd #6,600 V, EPR insulation
					2	Pull rope	Soft-Fiber Polyester
4176	E-99	78	RGS conduit	648.58	1935.24	A-1013-2	1-3/c + gnd #6,600 V, EPR insulation
						A-1013-2	1-3/c + gnd #6,600 V, EPR insulation
					2	Pull rope	Soft-Fiber Polyester
4177	E-99	78	RGS conduit	648.58	1935.24	A-1013-2	1-3/c + gnd #6,600 V, EPR insulation
						A-1013-2	1-3/c + gnd #6,600 V, EPR insulation
					2	Pull rope	Soft-Fiber Polyester
4178	E-99	78	RGS conduit	648.58	1935.24	A-1013-2	1-3/c + gnd #6,600 V, EPR insulation
						A-1013-2	1-3/c + gnd #6,600 V, EPR insulation
					2	Pull rope	Soft-Fiber Polyester
4179	E-99	78	RGS conduit	648.58	1935.24	A-1013-2	1-3/c + gnd #6,600 V, EPR insulation
						A-1013-2	1-3/c + gnd #6,600 V, EPR insulation
					2	Pull rope	Soft-Fiber Polyester
4180	E-99	78	RGS conduit	648.58	1935.24	A-1013-2	1-3/c + gnd #6,600 V, EPR insulation
						A-1013-2	1-3/c + gnd #6,600 V, EPR insulation
					2	Pull rope	Soft-Fiber Polyester
4181	E-99	78	RGS conduit	648.58	1935.24	A-1013-2	1-3/c + gnd #6,600 V, EPR insulation
						A-1013-2	1-3/c + gnd #6,600 V, EPR insulation
					2	Pull rope	Soft-Fiber Polyester
4182	E-99	78	RGS conduit	648.58	1935.24	A-1013-2	1-3/c + gnd #6,600 V, EPR insulation
						A-1013-2	1-3/c + gnd #6,600 V, EPR insulation
					2	Pull rope	Soft-Fiber Polyester
4183	E-99	78	RGS conduit	648.58	1935.24	A-1013-2	1-3/c + gnd #6,600 V, EPR insulation
						A-1013-2	1-3/c + gnd #6,600 V, EPR insulation
					2	Pull rope	Soft-Fiber Polyester
4184	E-100	78	RGS conduit	648.58	1935.24	A-1013-2	1-3/c + gnd #6,600 V, EPR insulation
						A-1013-2	1-3/c + gnd #6,600 V, EPR insulation
					2	Pull rope	Soft-Fiber Polyester
4185	E-100	78	RGS conduit	851.47	1935.24	A-1014-2	1-3/c + gnd #6,600 V, EPR insulation
						A-1014-1	1-3/c + gnd #2,600V, EPR insulation
					2	Pull rope	Soft-Fiber Polyester
4186	E-100	78	RGS conduit	648.58	1935.24	A-1014-2	1-3/c + gnd #6,600 V, EPR insulation
						A-1014-2	1-3/c + gnd #6,600 V, EPR insulation
					2	Pull rope	Soft-Fiber Polyester
4187	E-100	78	RGS conduit	648.58	1935.24	A-1014-2	1-3/c + gnd #6,600 V, EPR insulation
						A-1014-2	1-3/c + gnd #6,600 V, EPR insulation
					2	Pull rope	Soft-Fiber Polyester
4188	E-100	78	RGS conduit	648.58	1935.24	A-1014-2	1-3/c + gnd #6,600 V, EPR insulation
						A-1014-2	1-3/c + gnd #6,600 V, EPR insulation
					2	Pull rope	Soft-Fiber Polyester
4189	E-100	78	RGS conduit	648.58	1935.24	A-1014-2	1-3/c + gnd #6,600 V, EPR insulation
						A-1014-2	1-3/c + gnd #6,600 V, EPR insulation
					2	Pull rope	Soft-Fiber Polyester
4190	E-100	78	RGS conduit	648.58	1935.24	A-1014-2	1-3/c + gnd #6,600 V, EPR insulation
						A-1014-2	1-3/c + gnd #6,600 V, EPR insulation
					2	Pull rope	Soft-Fiber Polyester
4191	E-100	78	RGS conduit	648.58	1935.24	A-1014-2	1-3/c + gnd #6,600 V, EPR insulation
						A-1014-2	1-3/c + gnd #6,600 V, EPR insulation
					2	Pull rope	Soft-Fiber Polyester
4192	E-96	78	RGS conduit	648.58	1935.24	A-1011-2	1-3/c + gnd #6,600 V, EPR insulation
						A-1012-2	1-3/c + gnd #6,600 V, EPR insulation
					2	Pull rope	Soft-Fiber Polyester
4193	E-97	78	RGS conduit	648.58	1935.24	A-1012-2	1-3/c + gnd #6,600 V, EPR insulation
						A-1012-2	1-3/c + gnd #6,600 V, EPR insulation
					2	Pull rope	Soft-Fiber Polyester
4194	E-101	78	RGS conduit	648.58	1935.24	A-1014-2	1-3/c + gnd #6,600 V, EPR insulation
						A-1014-2	1-3/c + gnd #6,600 V, EPR insulation
					2	Pull rope	Soft-Fiber Polyester
4195	E-101	78	RGS conduit	648.58	1935.24	A-1014-2	1-3/c + gnd #6,600 V, EPR insulation
						A-1014-2	1-3/c + gnd #6,600 V, EPR insulation
					2	Pull rope	Soft-Fiber Polyester
4196	E-101	78	RGS conduit	648.58	1935.24	A-1014-2	1-3/c + gnd #6,600 V, EPR insulation
						A-1014-2	1-3/c + gnd #6,600 V, EPR insulation
					2	Pull rope	Soft-Fiber Polyester
4197	E-101	78	RGS conduit	648.58	1935.24	A-1014-2	1-3/c + gnd #6,600 V, EPR insulation
						A-1014-2	1-3/c + gnd #6,600 V, EPR insulation
					2	Pull rope	Soft-Fiber Polyester

CONDUIT DATA

Conduit No	Reference	Size	Type	Total Fill (mm2)	Allowable Fill (mm2)	Included Cable No.	Conductor Type
4198	E-101	78	RGS conduit	648.58	1935.24	A-1014-2	1-3/c + gnd #6,600 V, EPR insulation
						A-1014-2	1-3/c + gnd #6,600 V, EPR insulation
					2	Pull rope	Soft-Fiber Polyester
4199	E-101	78	RGS conduit	324.29	1935.24	A-1014-2	1-3/c + gnd #6,600 V, EPR insulation
						Pull rope	Soft-Fiber Polyester
4201	E-114	78	RGS conduit 2	62.07	1935.24	Pull rope	Soft-Fiber Polyester 2
						1255-1	1-3/C #16,600 V, EPR insulation
4202	E-114	78	RGS conduit	0.00	1935.24	Pull rope	Soft-Fiber Polyester
4203	E-114	53	RGS conduit	527.18	879.42		2
					2	1095	1-3/c + gnd #2,600 V, EPR insulation
							2
						Pull rope	Soft-Fiber Polyester
							2
4204	E-114	78	RGS conduit 2	0.00	1935.24	Pull rope	Soft-Fiber Polyester
4205	E-114	53	RGS conduit	0.00	1935.24	Pull rope	Soft-Fiber Polyester
4206	E-114	78	RGS conduit	150.44	1935.24	Pull rope	Soft-Fiber Polyester
						MVDSW02A	MVDS DLC
4208	E-114	78	RGS-PVC coated conduit	30.19	1935.24	1475-3A	12 Fiber, single mode fiberoptic cable
						Pull rope	Soft-Fiber Polyester
4208A	E-114	78	RGS-PVC coated conduit		1935.24	Pull rope	Soft-Fiber Polyester
4221	E-115	78	RGS conduit	946.99	1935.24	UP105-2	1-2/c + gnd #8,600 V, EPR insulation
						Pull rope	Soft-Fiber Polyester
						S-3056-7	1-2/C #14,600 V, EPR insulation
						S-3056-5	1-4/C #14,600 V, EPR insulation
						1255-1	1-3/C #16,600 V, EPR insulation
						1255-2	1-3/C #16,600 V, EPR insulation
						1115-2	1-3/C #16,600 V, EPR insulation
						1115-1	1-3/C #14,600 V, EPR insulation
						1202-4	1-3/C #14,600 V, EPR insulation
						1202-2	1-3/C #14,600 V, EPR insulation
						1202-3	1-7/C #16,600 V, EPR insulation
4222	E-115	78	RGS conduit	682.38	1935.24	Pull rope	Soft-Fiber Polyester
						1201-6	1-2/c + gnd #8,600 V, EPR insulation
						1201-2	1-2/c + gnd #8,600 V, EPR insulation
						1201-1	1-2/c + gnd #8,600 V, EPR insulation
4223	E-115	53	RGS conduit	527.18	879.42		2
		2			2		
						Pull rope	Soft-Fiber Polyester
						1096	1-3/c + gnd #2,600 V, EPR insulation
							2

For continuation, see next sheet.

CONDUIT AND TRAY SCHEDULE

E-433

STATE OF CALIFORNIA - DEPARTMENT OF TRANSPORTATION
Caltrans

DESIGN OVERSIGHT
BEHZAD GOLEMOHAMMADI

CALCULATED/ DESIGNED BY	DATE 8/02	REVISED BY	DATE REVISED
CHECKED BY	PBP AB		

LAST REVISION 00-00-00
DATE PLOTTED => 3/31/2009
TIME PLOTTED => 2:28:35 PM

FOR REDUCED PLANS ORIGINAL SCALE IS IN MILLIMETERS 0 20 40 60 80

DGN FILE =>T:\13103\MS\pse\SAS Struc\CCO\SAS CCO55\04-0120f1_0388R02.dgn
USERNAME =>garciar

CU 04251 EA 0120F1

DIST	COUNTY	ROUTE	KILOMETER POST TOTAL PROJECT	SHEET No	TOTAL SHEETS
04	SF	80	13.2/13.9	389 R2	1204

REGISTERED ELECTRICAL ENGINEER 12/19/02 DATE

12-6-04
PLANS APPROVAL DATE

PB POWER, Inc.
A Parsons Brinckerhoff Company
303 Second St., Suite 700N
San Francisco, CA 94107-1317

The State of California or its officers or agents shall not be responsible for the accuracy or completeness of electronic copies of this plan sheet.

Caltrans now has a web site! To get to the web site, go to http://www.dot.ca.gov

REGISTERED PROFESSIONAL ENGINEER JENS ERLINGSSON No. 8249 Exp. 9/30/06 ELECTRICAL STATE OF CALIFORNIA

REQUEST FOR INFORMATION NOT ADDRESSED IN THIS CCO REMAIN IN FORCE

MARK	DATE	DESCRIPTIONS	BY	CH'D	CCO#
2	03/30/09	SERVICE PLATFORM ELECTRICAL CHANGES	RR RY	RG MP	55
1	03/04/08	BARRIER MODIFICATIONS	JS BM	RG SE	44

REVISIONS

CONTRACT CHANGE ORDER NO._____
SHEET_____ OF_____

REGISTERED PROFESSIONAL ENGINEER S. A. ESTOQUE, JR No. E-10151 Exp. 12/31/2008 ELECTRICAL STATE OF CALIFORNIA

FOR REVISION ONLY 1

REGISTERED PROFESSIONAL ENGINEER FADI WALIEDDINE No. 11465 Exp. 12/31/2009 ELECTRICAL STATE OF CALIFORNIA

FOR REVISION ONLY 2

CONDUIT DATA

Conduit No	Reference	Size	Type	Total Fill (mm²)	Allowable Fill (mm²)	Included Cable No.	Conductor Type
4224	E-115	78	RGS conduit	227.46	1935.24	Pull rope	Soft-Fiber Polyester
						UP105-9	1-2/c + gnd #8,600 V, EPR insulation
		2					
4225	E-115	53	RGS conduit	317.80	1935.24		
						Pull rope	Soft-Fiber Polyester
						1474-5B	1 - 6 pair, shielded #18 with overall shield, 300 V, PVC jacket
						1474-5A	1 - 6 pair, shielded #18 with overall shield, 300 V, PVC jacket
4226	E-115	78	RGS conduit	0.00	1935.24	Pull rope	Soft-Fiber Polyester
4241	E-116	78	RGS conduit	562.50	1935.24	1255-2	1-3/C #16,600 V, EPR insulation
						1202-4	1-3/C #14,600 V, EPR insulation
						1202-3	1-7/C #16,600 V, EPR insulation
						1202-2	1-3/C #14,600 V, EPR insulation
						1202-1	1-2/c + gnd #8,600 V, EPR insulation
						Pull rope	Soft-Fiber Polyester
4242	E-116	78	RGS conduit	192.40	1935.24	CCTVE01BA	TVP
						CCTVE01BB	TVCP
						Pull rope	Soft-Fiber Polyester
		2					
4243	E-116	53	RGS conduit	527.18	879.42		
					2		2
						Pull rope	Soft-Fiber Polyester
						1096	1-3/c + gnd #2,600 V, EPR insulation 2
4244	E-116	53	RGS conduit	527.18	879.42	Pull rope	Soft-Fiber Polyester
		2			2	1097	1-3/c + gnd #2,600 V, EPR insulation
4245	E-116	53	RGS conduit	0.00	1935.24	Pull rope	Soft-Fiber Polyester
4246	E-116	78	RGS conduit	324.26	1935.24	MVDSW03A	MVDS DLC
						Pull rope	Soft-Fiber Polyester
						CCTVE01BD	TVL
						CCTVE01BC	TVC
4248	E-116	78	RGS-PVC coated conduit	30.19	1935.24	Pull rope	Soft-Fiber Polyester
						1475-3B	12 Fiber, single mode fiberoptic cable
4261	E-117	78	RGS conduit	62.07	1935.24	Pull rope	Soft-Fiber Polyester
						1256-1	1-3/C #16,600 V, EPR insulation
4262	E-117	78	RGS conduit	0.00	1935.24	Pull rope	Soft-Fiber Polyester
		2					
4263	E-117	53	RGS conduit	527.18	879.42	Pull rope	Soft-Fiber Polyester
					2		2
						1098	1-3/c + gnd #2,600 V, EPR insulation
							2
4264	E-117	78	RGS conduit	0.00	1935.24	Pull rope	Soft-Fiber Polyester
		2					
4265	E-117	53	RGS conduit	150.44	1935.24	Pull rope	Soft-Fiber Polyester
						MVDSW04A	MVDS DLC
4266	E-117	78	RGS conduit	0.00	1935.24	Pull rope	Soft-Fiber Polyester
4268	E-117	78	RGS-PVC coated conduit	30.19	1935.24	Pull rope	Soft-Fiber Polyester
						1475-3C	12 Fiber, single mode fiberoptic cable
4281	E-118	78	RGS conduit	294.50	1935.24	1118-1	1-3/C #14,600 V, EPR insulation
						1117-1	1-3/C #14,600 V, EPR insulation
						1117-2	1-3/C #16,600 V, EPR insulation
						1118-2	1-3/C #16,600 V, EPR insulation
						Pull rope	Soft-Fiber Polyester

CONDUIT DATA

Conduit No	Reference	Size	Type	Total Fill (mm²)	Allowable Fill (mm²)	Included Cable No.	Conductor Type
4282	E-118	78	RGS conduit	1087.85	1935.24	2201-5	1-3/C #14,600 V, EPR insulation
						2201-1	1-2/c + gnd #8,600 V, EPR insulation
						2201-2	1-2/c + gnd #8,600 V, EPR insulation
						2201-6	1-2/c + gnd #8,600 V, EPR insulation
						Pull rope	Soft-Fiber Polyester
						2201-4	1-9/C #16,600 V, EPR insulation
						2201-3	1-3/C #14,600 V, EPR insulation
						S-3056-8	1-4/C #14,600 V, EPR insulation
		2					
4283	E-118	53	RGS conduit	527.18	879.42		2
					2	1099	1-3/c + gnd #2,600 V, EPR insulation
							2
						Pull rope	Soft-Fiber Polyester
							2
4284	E-118	78	RGS conduit	454.92	1935.24	Pull rope	Soft-Fiber Polyester
						UP108-3	1-2/c + gnd #8,600 V, EPR insulation
						UP108-2	1-2/c + gnd #8,600 V, EPR insulation
		2					
4285	E-118	53	RGS conduit	317.80	1935.24	Pull rope	Soft-Fiber Polyester
						1474-8A	1 - 6 pair, shielded #18 with overall shield, 300 V, PVC jacket
						1474-8B	1 - 6 pair, shielded #18 with overall shield, 300 V, PVC jacket
4286	E-118	78	RGS conduit	0.00	1935.24	Pull rope	Soft-Fiber Polyester
4301	E-96	78	RGS conduit	366.10	1935.24	A-3001-1	1-3/c + gnd #4,600 V, EPR insulation
						Pull rope	Soft-Fiber Polyester
4303	E-96	41	RGS conduit	0.00	534.55	Pull rope	Soft-Fiber Polyester
4304	E-96	41	RGS conduit	212.85	534.55	Pull rope	Soft-Fiber Polyester
						A-3001-2	3 + 1 gnd #6,#8, 600 V, RHH/RHW insulation
4305	E-96	41	RGS conduit	0.00	534.55	Pull rope	Soft-Fiber Polyester
4306	E-96	41	RGS conduit	0.00	534.55	Pull rope	Soft-Fiber Polyester
4307	E-96	53	RGS conduit	0.00	879.42	Pull rope	Soft-Fiber Polyester
4308	E-96	53	RGS conduit	0.00	879.42	Pull rope	Soft-Fiber Polyester
4309	E-96	41	RGS conduit	0.00	534.55	Pull rope	Soft-Fiber Polyester
4310	E-96	41	RGS conduit	0.00	534.55	Pull rope	Soft-Fiber Polyester

For continuation, see next sheet.

CONDUIT AND TRAY SCHEDULE

E-434

REVISED BY	DATE REVISED

CALCULATED/DESIGNED BY	DATE 8/02
PBP	8/02
CHECKED BY	AB

DESIGN OVERSIGHT
BEHZAD GOLEMOHAMMADI

STATE OF CALIFORNIA - DEPARTMENT OF TRANSPORTATION
Caltrans

LAST REVISION 00-00-00
DATE PLOTTED => 3/31/2009
TIME PLOTTED => 2:27:57 PM

DIST	COUNTY	ROUTE	KILOMETER POST TOTAL PROJECT	SHEET No	TOTAL SHEETS
04	SF	80	13.2/13.9	393 R3	1204

REGISTERED ELECTRICAL ENGINEER 12/19/02 DATE

12-6-04
PLANS APPROVAL DATE

REGISTERED PROFESSIONAL ENGINEER JENS ERLINGSSON No. 8249 Exp. 9/30/06 ELECTRICAL STATE OF CALIFORNIA

PB POWER, Inc.
A Parsons Brinckerhoff Company
303 Second St., Suite 700N
San Francisco, CA 94107-1317

The State of California or its officers or agents shall not be responsible for the accuracy or completeness of electronic copies of this plan sheet.

Caltrans now has a web site! To get to the web site, go to http://www.dot.ca.gov

Caltrans Metric

REQUEST FOR INFORMATION NOT ADDRESSED IN THIS CCO REMAIN IN FORCE

MARK	DATE	DESCRIPTIONS	BY	CH'D	CCO#
3	03/30/09	SERVICE PLATFORM ELECTRICAL CHANGES	RR RY	RG MP	55
2	03/04/08	BARRIER MODIFICATIONS	JS BM	RG SE	44
1	02/19/08	ELECTRICAL MODIFICATIONS	MP EL	RR	42

REVISIONS

CONTRACT CHANGE ORDER NO._____
SHEET_____ OF_____

REGISTERED PROFESSIONAL ENGINEER MAXWELL FUMIO TAKAKI No. E 8651 Exp. 9/30/2008 ELECTRICAL STATE OF CALIFORNIA
FOR REVISION ONLY 1

REGISTERED PROFESSIONAL ENGINEER S. A. ESTOQUE, JR No. E-10151 Exp. 12/31/2008 ELECTRICAL STATE OF CALIFORNIA
FOR REVISION ONLY 2

REGISTERED PROFESSIONAL ENGINEER FADI WALIEDDINE No. 11465 Exp. 12/31/2009 ELECTRICAL STATE OF CALIFORNIA
FOR REVISION ONLY 3

CONDUIT DATA

Conduit No	Reference	Size	Type	Total Fill (mm²)	Allowable Fill (mm²)	Included Cable No.	Conductor Type
4505	E-100	41	RGS conduit	0.00	534.55	Pull rope	Soft-Fiber Polyester
4506	E-100	41	RGS conduit	0.00	534.55	Pull rope	Soft-Fiber Polyester
4507	E-101	41	RGS conduit	0.00	534.55	Pull rope	Soft-Fiber Polyester
4508	E-99	41	RGS conduit	0.00	534.55	Pull rope	Soft-Fiber Polyester
4509	E-99	53	RGS conduit	0.00	879.42	Pull rope	Soft-Fiber Polyester
4510	E-99	53	RGS conduit	0.00	879.42	Pull rope	Soft-Fiber Polyester
4511	E-100	41	RGS conduit	0.00	534.55	Pull rope	Soft-Fiber Polyester
4512	E-100	41	RGS conduit	0.00	534.55	Pull rope	Soft-Fiber Polyester
4513	E-100	41	RGS conduit	0.00	534.55	Pull rope	Soft-Fiber Polyester
4514	E-100	41	RGS conduit	0.00	534.55	Pull rope	Soft-Fiber Polyester
4515	E-100	53	RGS conduit	0.00	879.42	Pull rope	Soft-Fiber Polyester
4516	E-100	53	RGS conduit	0.00	879.42	Pull rope	Soft-Fiber Polyester
4517	E-100	41	RGS conduit	0.00	534.55	Pull rope	Soft-Fiber Polyester
4518	E-100	41	RGS conduit	0.00	534.55	Pull rope	Soft-Fiber Polyester
4519	E-100	41	RGS conduit	0.00	534.55	Pull rope	Soft-Fiber Polyester
4520	E-100	41	RGS conduit	0.00	534.55	Pull rope	Soft-Fiber Polyester
4521	E-100	53	RGS conduit	481.21	879.42	Pull rope	Soft-Fiber Polyester
						S-1031-4	3 + 1 gnd #4, #8, 600 V, RHH/RHW insulation
						A-1035-4	3 + 1 gnd #6, #8, 600 V, RHH/RHW insulation
4522	E-100	53	RGS conduit	176.28	879.42	Pull rope	Soft-Fiber Polyester
						A-1035-4	3 + 1 gnd #6, #8, 600 V, RHH/RHW insulation
4523	E-100	41	RGS conduit	0.00	534.55	Pull rope	Soft-Fiber Polyester
4524	E-100	41	RGS conduit	0.00	534.55	Pull rope	Soft-Fiber Polyester
4525	E-100	53	RGS conduit	324.29	879.42	A-1013-2	1-3/C + gnd #6, 600 V, EPR insulation
						Pull rope	Soft-Fiber Polyester
4526	E-100	53	RGS conduit	648.58	879.42	A-1014-2	1-3/C + gnd #6, 600 V, EPR insulation
						Pull rope	Soft-Fiber Polyester
						A-1014-2	1-3/C + gnd #6, 600 V, EPR insulation
4527	E-100	41	RGS conduit	0.00	534.55	Pull rope	Soft-Fiber Polyester
4528	E-100	41	RGS conduit	0.00	534.55	Pull rope	Soft-Fiber Polyester
4531	E-100	41	RGS conduit	0.00	534.55	Pull rope	Soft-Fiber Polyester
4532	E-100	41	RGS conduit	0.00	534.55	Pull rope	Soft-Fiber Polyester
4533	E-100	53	RGS conduit	0.00	879.42	Pull rope	Soft-Fiber Polyester
4534	E-100	53	RGS conduit	0.00	879.42	Pull rope	Soft-Fiber Polyester
4535	E-100	41	RGS conduit	0.00	534.55	Pull rope	Soft-Fiber Polyester
4536	E-100	41	RGS conduit	0.00	534.55	Pull rope	Soft-Fiber Polyester
4537	E-100	41	RGS conduit	0.00	534.55	Pull rope	Soft-Fiber Polyester
4538	E-100	41	RGS conduit	0.00	534.55	Pull rope	Soft-Fiber Polyester
4539	E-100	53	RGS conduit	0.00	879.42	Pull rope	Soft-Fiber Polyester
4540	E-100	53	RGS conduit	0.00	879.42	Pull rope	Soft-Fiber Polyester
4541	E-100	41	RGS conduit	0.00	534.55	Pull rope	Soft-Fiber Polyester
4542	E-100	41	RGS conduit	0.00	534.55	Pull rope	Soft-Fiber Polyester
4543	E-100	41	RGS conduit	227.46	534.55	Pull rope	Soft-Fiber Polyester

CONDUIT DATA

Conduit No	Reference	Size	Type	Total Fill (mm²)	Allowable Fill (mm²)	Included Cable No.	Conductor Type
4544	E-100	41	RGS conduit	0.00	534.55	Pull rope	Soft-Fiber Polyester
4545	E-100	53	RGS conduit	0.00	879.42	Pull rope	Soft-Fiber Polyester
4546	E-100	53	RGS conduit	0.00	879.42	Pull rope	Soft-Fiber Polyester
4547	E-100	41	RGS conduit	0.00	534.55		
						Pull rope	Soft-Fiber Polyester
4548	E-100	41	RGS conduit	0.00	534.55	Pull rope	Soft-Fiber Polyester
4549	E-100	41	RGS conduit	537.14	534.55	Pull rope	Soft-Fiber Polyester
						1106	1-3/C + gnd #6, 600 V, EPR insulation
						S-1032-2	3 + 1 gnd #6, #8, 600 V, RHH/RHW insulation
4550	E-100	41	RGS conduit	227.46	534.55	UP108-3	1-2/C + gnd #8, 600 V, EPR insulation
						Pull rope	Soft-Fiber Polyester
4551	E-100	53	RGS conduit	690.39	879.42	S-1032-1	1-3/C + gnd #4, 600 V, EPR insulation
						1106	1-3/C + gnd #6, 600 V, EPR insulation
						Pull rope	Soft-Fiber Polyester
4552	E-100	53	RGS conduit	227.46	879.42	UP108-3	1-2/C + gnd #8, 600 V, EPR insulation
						Pull rope	Soft-Fiber Polyester
4553	E-100	41	RGS conduit	0.00	534.55	Pull rope	Soft-Fiber Polyester
4554	E-100	41	RGS conduit	0.00	534.55	Pull rope	Soft-Fiber Polyester
4555	E-100	53	RGS conduit	648.58	879.42	Pull rope	Soft-Fiber Polyester
						A-1014-2	1-3/C + gnd #6, 600 V, EPR insulation
						A-1014-2	1-3/C + gnd #6, 600 V, EPR insulation
5001	E-71A 3	53	Liquidtight Flex. Metal Cond. 3	98.42	879.42	UP205-5	2 + 1 gnd #12,#12, 600 V, RHH/RHW insulation
						UP204-5	2 + 1 gnd #12,#12, 600 V, RHH/RHW insulation
						Pull rope	Soft-Fiber Polyester

For continuation, see next sheet.

CONDUIT AND TRAY SCHEDULE

E-438

CALCULATED/ DESIGNED BY	PBP	DATE 8/02	REVISED BY
CHECKED BY	AB	8/02	DATE REVISED

DESIGN OVERSIGHT
BEHZAD GOLEMOHAMMADI

STATE OF CALIFORNIA - DEPARTMENT OF TRANSPORTATION
Caltrans

LAST REVISION 00-00-00
DATE PLOTTED => 3/31/2009
TIME PLOTTED => 2:27:25 PM

DIST	COUNTY	ROUTE	KILOMETER POST TOTAL PROJECT	SHEET No	TOTAL SHEETS
04	SF	80	13.2/13.9	394 R2	1204

REGISTERED ELECTRICAL ENGINEER 12/19/02 DATE

12-6-04
PLANS APPROVAL DATE

REGISTERED PROFESSIONAL ENGINEER JENS ERLINGSSON No. 8249 Exp. 9/30/06 ELECTRICAL STATE OF CALIFORNIA

PB POWER, Inc.
A Parsons Brinckerhoff Company
303 Second St., Suite 700N
San Francisco, CA 94107-1317

The State of California or its officers or agents shall not be responsible for the accuracy or completeness of electronic copies of this plan sheet.

Caltrans now has a web site! To get to the web site, go to http://www.dot.ca.gov

Caltrans Metric

REQUEST FOR INFORMATION NOT ADDRESSED IN THIS CCO REMAIN IN FORCE

MARK	DATE	DESCRIPTIONS	BY	CH'D	CCO#
2	03/30/09	SERVICE PLATFORM ELECTRICAL CHANGES	RR RY	RG MP	55
1	03/04/08	BARRIER MODIFICATIONS	JS BM	RG SE	44

REVISIONS

CONTRACT CHANGE ORDER NO._____
SHEET_____ OF_____

REGISTERED PROFESSIONAL ENGINEER S. A. ESTOQUE, JR. No. E-10151 Exp. 12/31/2008 ELECTRICAL STATE OF CALIFORNIA

REGISTERED PROFESSIONAL ENGINEER FADI WALIEDDINE No. 11465 Exp. 12/31/2009 ELECTRICAL STATE OF CALIFORNIA

FOR REVISION ONLY (1) FOR REVISION ONLY (2)

CONDUIT DATA

Conduit No	Reference	Size	Type	Total Fill (mm²)	Allowable Fill (mm²)	Included Cable No.	Conductor Type
5002	E-71A	53	Liquidtight Flex. Metal Cond.	0.00	879.42	Pull rope	Soft-Fiber Polyester
5004	E-71A	53	Liquidtight Flex. Metal Cond.	648.58	879.42	Pull rope	Soft-Fiber Polyester
						LP219-2,4	1-3/C + gnd #6, 600 V, EPR insulation
						LP219-6,8	1-3/C + gnd #6, 600 V, EPR insulation
5005	E-71A	53	Liquidtight Flex. Metal Cond.	0.00	879.42	Pull rope	Soft-Fiber Polyester
5006	E-71A	53	Liquidtight Flex. Metal Cond.	0.00	879.42	Pull rope	Soft-Fiber Polyester
5026	E-72A	53	Liquidtight Flex. Metal Cond.	205.22	879.42	UP205-9	1-2/C + gnd #12, 600 V, EPR insulation
						UP205-11	1-2/C + gnd #12, 600 V, EPR insulation
						Pull rope	Soft-Fiber Polyester
5027	E-72A	53	Liquidtight Flex. Metal Cond.	0.00	879.42	Pull rope	Soft-Fiber Polyester
5029	E-72A	53	Liquidtight Flex. Metal Cond.	648.58	879.42	LP220-2,4	1-3/C + gnd #6, 600 V, EPR insulation
						Pull rope	Soft-Fiber Polyester
						LP220-6,8	1-3/C + gnd #6, 600 V, EPR insulation
5030	E-72A	53	Liquidtight Flex. Metal Cond.	0.00	879.42	Pull rope	Soft-Fiber Polyester
5031	E-72A	53	Liquidtight Flex. Metal Cond.	0.00	879.42	Pull rope	Soft-Fiber Polyester
5051	E-73A	53	Liquidtight Flex. Metal Cond.	49.21	879.42	Pull rope	Soft-Fiber Polyester
						UP206-5	2+1gnd #12,#12, 600 V, RHH/RHW insulation
5053	E-73A	53	Liquidtight Flex. Metal Cond.	227.46	879.42	UP206-9	1-2/C + gnd #8, 600 V, EPR insulation
						Pull rope	Soft-Fiber Polyester
5054	E-73A	53	Liquidtight Flex. Metal Cond.	648.58	879.42	Pull rope	Soft-Fiber Polyester
						LP221-6,8	1-3/C + gnd #6, 600 V, EPR insulation
						LP221-2,4	1-3/C + gnd #6, 600 V, EPR insulation
5055	E-73A	53	Liquidtight Flex. Metal Cond.	0.00	879.42	Pull rope	Soft-Fiber Polyester
5056	E-73A	53	Liquidtight Flex. Metal Cond.	0.00	879.42	Pull rope	Soft-Fiber Polyester
5076	E-74A	53	Liquidtight Flex. Metal Cond.	49.21	879.42	UP207-5	2 + 1 gnd #12,#12, 600 V, RHH/RHW insulation
						Pull rope	Soft-Fiber Polyester
5077	E-74A	53	Liquidtight Flex. Metal Cond.	0.00	879.42	Pull rope	Soft-Fiber Polyester
5079	E-74A	53	Liquidtight Flex. Metal Cond.	648.58	879.42	LP222-6,8	1-3/C + gnd #6, 600 V, EPR insulation
						Pull rope	Soft-Fiber Polyester
						LP222-2,4	1-3/C + gnd #6, 600 V, EPR insulation
5080	E-74A	53	Liquidtight Flex. Metal Cond.	0.00	879.42	Pull rope	Soft-Fiber Polyester
5081	E-74A	53	Liquidtight Flex. Metal Cond.	0.00	879.42	Pull rope	Soft-Fiber Polyester
5082	E-117	78	RGS-PVC coated conduit	150.44	1935.24	Pull rope	Soft-Fiber Polyester
						MVDSE03A	MVDS DLC

CONDUIT DATA

Conduit No	Reference	Size	Type	Total Fill (mm²)	Allowable Fill (mm²)	Included Cable No.	Conductor Type
5101	E-75A	53	Liquidtight Flex. Metal Cond.	481.89	879.42	UP208-5	2 + 1 gnd #12,#12, 600 V, RHH/RHW insulation
						UP208-11	1-3/C #12, 600 V, EPR insulation
						UP208-15	1-2/C + gnd #8, 600 V, EPR insulation
						UP208-9	1-2/C + gnd #12, 600 V, EPR insulation
						Pull rope	Soft-Fiber Polyester
5102	E-75A	53	Liquidtight Flex. Metal Cond.	0.00	879.42	Pull rope	Soft-Fiber Polyester
5104	E-75A	53	Liquidtight Flex. Metal Cond.	648.58	879.42	LP223-2,4	1-3/C + gnd #6, 600 V, EPR insulation
						LP223-6,8	1-3/C + gnd #6, 600 V, EPR insulation
						Pull rope	Soft-Fiber Polyester
5105	E-75A	53	Liquidtight Flex. Metal Cond.	0.00	879.42	Pull rope	Soft-Fiber Polyester
5106	E-75A	53	Liquidtight Flex. Metal Cond.	0.00	879.42	Pull rope	Soft-Fiber Polyester
5201	E-114	78	RGS conduit	648.58	1935.24	Pull rope	Soft-Fiber Polyester
						LP219-2,4	1-3/C + gnd #6, 600 V, EPR insulation
						LP219-6,8	1-3/C + gnd #6, 600 V, EPR insulation
5202	E-114	53	RGS conduit	0.00	1935.24	Pull rope	Soft-Fiber Polyester
5203	E-71A, E-114	53	RGS conduit	527.18	879.42		
						2095	1-3/C + gnd #2, 600 V, EPR insulation
						Pull rope	Soft-Fiber Polyester
5204	E-114	78	RGS conduit	0.00	1935.24	Pull rope	Soft-Fiber Polyester
5205	E-114	53	RGS conduit	527.18	879.42	Pull rope	Soft-Fiber Polyester
						2103	1-3/C + gnd #2, 600 V, EPR insulation
5206	E-114	78	RGS conduit	1201.71	1935.24	1474-4	50 pair #18, shielded pairs, IS/OS shield 600 V, XLPE insul., PVC jacket
5206A	E-71A	41	Liquidtight Flex. Metal Cond.		534.55	Pull rope	Soft-Fiber Polyester
5207	E-114	78	RGS conduit	1352.15	1935.24	MVDSE01A	MVDS DLC
						1474-5	50 pair #18, shielded pairs, IS/OS shield 600 V, XLPE insul., PVC jacket
5207A		53	Liquidtight Flex. Metal Cond.		879.42	Pull rope	Soft-Fiber Polyester
5208	E-114	78	RGS conduit	30.19	1935.24	2475-3A	12 Fiber, single mode fiberoptic cable
						Pull rope	Soft-Fiber Polyester

For continuation, see next sheet.

CONDUIT AND TRAY SCHEDULE

E-439

REVISED BY	DATE REVISED
PBP	AB

DATE 8/02

CALCULATED/DESIGNED BY
CHECKED BY

DESIGN OVERSIGHT
BEHZAD GOLEMOHAMMADI

STATE OF CALIFORNIA - DEPARTMENT OF TRANSPORTATION
Caltrans

LAST REVISION 00-00-00

DATE PLOTTED => 3/31/2009
TIME PLOTTED => 2:26:49 PM

DIST	COUNTY	ROUTE	KILOMETER POST TOTAL PROJECT	SHEET No	TOTAL SHEETS
04	SF	80	13.2/13.9	395 R2	1204

REQUEST FOR INFORMATION NOT ADDRESSED IN THIS CCO REMAIN IN FORCE

MARK	DATE	DESCRIPTIONS	BY	CH'D	CCO#
2	03/30/09	SERVICE PLATFORM ELECTRICAL CHANGES	RR RY	RG MP	55
1	03/04/08	BARRIER MODIFICATIONS	JS BM	RG SE	44

REVISIONS

CONTRACT CHANGE ORDER NO._____
SHEET_____ OF_____

Caltrans Metric

12/19/02
REGISTERED ELECTRICAL ENGINEER DATE

12-6-04
PLANS APPROVAL DATE

REGISTERED PROFESSIONAL ENGINEER JENS ERLINGSSON No. 8249 Exp. 9/30/06 ELECTRICAL STATE OF CALIFORNIA

PB POWER, Inc.
A Parsons Brinckerhoff Company
303 Second St., Suite 700N
San Francisco, CA 94107-1317

The State of California or its officers or agents shall not be responsible for the accuracy or completeness of electronic copies of this plan sheet.

Caltrans now has a web site! To get to the web site, go to http://www.dot.ca.gov

REGISTERED PROFESSIONAL ENGINEER S. A. ESTOQUE, JR. No. E-10151 Exp. 12/31/2008 ELECTRICAL STATE OF CALIFORNIA

FOR REVISION ONLY 1

REGISTERED PROFESSIONAL ENGINEER FADI WALIEDDINE No. 11465 Exp. 12/31/2009 ELECTRICAL STATE OF CALIFORNIA

FOR REVISION ONLY 2

CONDUIT DATA

Conduit No	Reference	Size	Type	Total Fill (mm²)	Allowable Fill (mm²)	Included Cable No.	Conductor Type
5210	E-114	78	RGS conduit 2	1323.45	1935.24	Pull rope	Soft-Fiber Polyester
						2119-2	4 pair #22, shielded pairs, 300 V, PE insulation
2						1473-5	50 pair #18, shielded pairs, IS/OS shield 600 V, XLPE insul., PVC jacket
5210A	E-71A	41	Liquidtight Flex. Metal cond.		534.55	Pull rope	Soft-Fiber Polyester
5211	E-114	78	RGS conduit 2	0.00	1935.24	Pull rope	Soft-Fiber Polyester
5221	E-115	78	RGS conduit	272.97	1935.24	2202-2	1-3/C #14, 600 V, EPR insulation
						Pull rope	Soft-Fiber Polyester
						2202-3	1-7/C #16, 600 V, EPR insulation
						2202-4	1-3/C #14, 600 V, EPR insulation
5222	E-115	78	RGS conduit	1211.54	1935.24	LP220-2,4	1-3/C + gnd #6, 600 V, EPR insulation
						2121-1	1-3/C #14, 600 V, EPR insulation
						LP220-6,8	1-3/C + gnd #6, 600 V, EPR insulation
						Pull rope	Soft-Fiber Polyester
						S-3056-6	1-4/C #14, 600 V, EPR insulation
						2120-2	1-3/C #14, 600 V, EPR insulation
						2120-1	1-3/C #14, 600 V, EPR insulation
						2204-2	1-3/C #16, 600 V, EPR insulation
						2204-1	1-3/C #16, 600 V, EPR insulation
						2121-4	1-3/C #14, 600 V, EPR insulation
5223	E-115	78	RGS conduit	1235.86	1935.24	UP205-1	1-2/C + gnd #10 ,600 V, EPR insulation
						Pull rope	Soft-Fiber Polyester
						UP206-1	1-2/C + gnd #10 ,600 V, EPR insulation
						UP205-8	1-2/C + gnd #8, 600 V, EPR insulation
						2096	1-3/C + gnd #2, 600 V, EPR insulation
						UP205-7	1-2/C + gnd #8, 600 V, EPR insulation
5224	E-115	78	RGS conduit	227.46	1935.24	Pull rope	Soft-Fiber Polyester
						UP205-6	1-2/C + gnd #8, 600 V, EPR insulation
5225	E-115	53 2	RGS conduit	527.18	879.42 2	Pull rope	Soft-Fiber Polyester
						2104	1-3/C + gnd #2, 600 V, EPR insulation
5226	E-115	78	RGS conduit	1361.88	1935.24		
						2910-11	1-3/C #16, 600 V, EPR insulation
						1474-5	50 pair #18, shielded pairs, IS/OS shield 600 V, XLPE insul., PVC jacket
						2155	1-2 pair, shielded #18 with IS/OA, 300V PVC jacket
						Pull rope	Soft-Fiber Polyester
5227	E-115	78	RGS conduit	1201.71	1935.24	Pull rope	Soft-Fiber Polyester
						1474-6	50 pair #18, shielded pairs, IS/OS shield 600 V, XLPE insul., PVC jacket
5228	E-115	78	RGS conduit	1445.19	1935.24	2910-10	4 pair #22, shielded pairs, 300 V, PE insulation
						Pull rope	Soft-Fiber Polyester
			2			1473-5	50 pair #18, shielded pairs, IS/OS shield 600 V, XLPE insul., PVC jacket
						2910-12	4 pair #22, shielded pairs, 300 V, PE insulation
5229	E-115	78	RGS conduit	317.80	1935.24	1474-5A	1 - 6 pair, shielded #18 with overall shield, 300 V, PVC jacket
						Pull rope	Soft-Fiber Polyester
						1474-5B	1 - 6 pair, shielded #18 with overall shield, 300 V, PVC jacket
5230	E-114	78	RGS conduit	0.00	1935.24	Pull rope	Soft-Fiber Polyester
5231	E-114	78	RGS conduit	0.00	1935.24	Pull rope	Soft-Fiber Polyester
5232	E-114	78	RGS conduit	1201.71	1935.24	1473-4	50 pair #18, shielded pairs, IS/OS shield 600 V, XLPE insul., PVC jacket
						Pull rope	Soft-Fiber Polyester
5233	E-115	78	RGS conduit	0.00	1935.24	Pull rope	Soft-Fiber Polyester
5234	E-115	78	RGS conduit	0.00	1935.24	Pull rope	Soft-Fiber Polyester
5235	E-115	78	RGS conduit	1201.71	1935.24	Pull rope	Soft-Fiber Polyester
						1473-6	50 pair #18, shielded pairs, IS/OS shield 600 V, XLPE insul., PVC jacket

CONDUIT DATA

Conduit No	Reference	Size	Type	Total Fill (mm²)	Allowable Fill (mm²)	Included Cable No.	Conductor Type
5236	E-116	53	RGS conduit	0.00	1935.24	Pull rope	Soft-Fiber Polyester
5237	E-116	78	RGS conduit	0.00	1935.24	Pull rope	Soft-Fiber Polyester
5238	E-116	78	RGS conduit 2	1201.71	1935.24	1473-6	50 pair #18, shielded pairs, IS/OS shield 600 V, XLPE insul., PVC jacket
						Pull rope	Soft-Fiber Polyester
5241	E-116	78	RGS conduit	1027.61	1935.24	2202-3	1-7/C #16, 600 V, EPR insulation
						2202-2	1-3/C #14, 600 V, EPR insulation
						2202-4	1-3/C #14, 600 V, EPR insulation
						2105	1-3/C + gnd #2, 600 V, EPR insulation
						2202-1	1-2/C + gnd #8, 600 V, EPR insulation
						Pull rope	Soft-Fiber Polyester
5242	E-116	53 2	RGS conduit	192.40	1935.24	Pull rope	Soft-Fiber Polyester
						CCTVE01AB	TVCP
						CCTVE01AA	TVP
5243	E-116	53	RGS conduit 2	527.18	879.42	Pull rope	Soft-Fiber Polyester 2
						2097	1-3/C + gnd #2, 600 V, EPR insulation
5244	E-116	78	RGS conduit	648.58	1935.24	Pull rope	Soft-Fiber Polyester
						LP221-2,4	1-3/C + gnd #6, 600 V, EPR insulation
						LP221-6,8	1-3/C + gnd #6, 600 V, EPR insulation
5245	E-116	78	RGS conduit 2	727.89	1935.24	2202-1	1-2/C + gnd #8, 600 V, EPR insulation
						2202-2	1-3/C #14, 600 V, EPR insulation
						UP206-9	1-2/C + gnd #8, 600 V, EPR insulation
						2202-4	1-3/C #14, 600 V, EPR insulation
						2204-3	1-7/C #16, 600 V, EPR insulation
						Pull rope	Soft-Fiber Polyester
5246	E-116	78	RGS conduit	1201.71	1935.24	1474-6	50 pair #18, shielded pairs, IS/OS shield 600 V, XLPE insul., PVC jacket
						Pull rope	Soft-Fiber Polyester
5247	E-116	78	RGS conduit	1525.97	1935.24	Pull rope	Soft-Fiber Polyester
						MVDSE02A	MVDS DLC
						CCTVE01AD	TVL
						CCTVE01AC	TVC
						1474-7	50 pair #18, shielded pairs, IS/OS shield 600 V, XLPE insul., PVC jacket
5249	E-116	78	RGS-PVC coated conduit	30.19	1935.24	2475-3B	12 Fiber, single mode fiberoptic cable
						Pull rope	Soft-Fiber Polyester
5250	E-116	78	RGS conduit 2	1201.71	1935.24	1473-7	50 pair #18, shielded pairs, IS/OS shield 600 V, XLPE insul., PVC jacket
						Pull rope	Soft-Fiber Polyester

For continuation, see next sheet.

CONDUIT AND TRAY SCHEDULE

E-440

DATE	REVISED BY	CALCULATED/ DESIGNED BY	DESIGN OVERSIGHT
8/02	8/02	PBP	BEHZAD GOLEMOHAMMADI
DATE	DATE REVISED	AB	

STATE OF CALIFORNIA - DEPARTMENT OF TRANSPORTATION
Caltrans

DATE PLOTTED => 3/31/2009
TIME PLOTTED => 2:26:18 PM
LAST REVISION 00-00-00

DIST	COUNTY	ROUTE	KILOMETER POST TOTAL PROJECT	SHEET No	TOTAL SHEETS
04	SF	80	13.2/13.9	396 R3	1204

REGISTERED ELECTRICAL ENGINEER 12/19/02 DATE

12-6-04
PLANS APPROVAL DATE

PB POWER, Inc.
A Parsons Brinckerhoff Company
303 Second St., Suite 700N
San Francisco, CA 94107-1317

REGISTERED PROFESSIONAL ENGINEER JENS ERLINGSSON No. 8249 Exp. 9/30/06 ELECTRICAL STATE OF CALIFORNIA

The State of California or its officers or agents shall not be responsible for the accuracy or completeness of electronic copies of this plan sheet.

Caltrans now has a web site! To get to the web site, go to http://www.dot.ca.gov

Caltrans Metric

REQUEST FOR INFORMATION NOT ADDRESSED IN THIS CCO REMAIN IN FORCE

MARK	DATE	DESCRIPTIONS	BY	CH'D	CCO#
3	03/30/09	SERVICE PLATFORM ELECTRICAL CHANGES	RR RY	RG MP	55
2	03/04/08	BARRIER MODIFICATIONS	JS BM	RG SE	44
1	02/19/08	ELECTRICAL MODIFICATIONS	MP EL	RR	42

REVISIONS

CONTRACT CHANGE ORDER NO._____
SHEET_____ OF _____

REGISTERED PROFESSIONAL ENGINEER MAXWELL FUMIO TAKAKI No. E 8651 Exp. 9/30/2008 ELECTRICAL STATE OF CALIFORNIA
FOR REVISION ONLY 1

REGISTERED PROFESSIONAL ENGINEER S. A. ESTOQUE, JR No. E-10151 Exp. 12/31/2008 ELECTRICAL STATE OF CALIFORNIA
FOR REVISION ONLY 2

REGISTERED PROFESSIONAL ENGINEER FADI WALIEDDINE No. 11465 Exp. 12/31/2009 ELECTRICAL STATE OF CALIFORNIA
FOR REVISION ONLY 3

CONDUIT DATA

Conduit No	Reference	Size	Type	Total Fill (mm²)	Allowable Fill (mm²)	Included Cable No.	Conductor Type
5251	E-116	78	RGS conduit 3	0.00	1935.24	Pull rope	Soft-Fiber Polyester
5261	E-117	78	RGS conduit	648.58	1935.24	LP222-2,4	1-3/C + gnd #6, 600 V, EPR insulation
						Pull rope	Soft-Fiber Polyester
						LP222-6,8	1-3/C + gnd #6, 600 V, EPR insulation
5262	E-117	78	RGS conduit	0.00	1935.24	Pull rope	Soft-Fiber Polyester
5263	E-117	53 3	RGS conduit	527.18	879.42 3	2098	1-3/C + gnd #2, 600 V, EPR insulation 3
						Pull rope	Soft-Fiber Polyester 3
5264	E-117	78	RGS conduit	0.00	1935.24	Pull rope	Soft-Fiber Polyester
5265	E-117	53 3	RGS conduit	527.18	879.42 3	Pull rope	Soft-Fiber Polyester
						2106	1-3/C + gnd #2, 600 V, EPR insulation
5266	E-117	78	RGS conduit	0.00	1935.24	Pull rope	Soft-Fiber Polyester
5267	E-117	78	RGS conduit	1201.71	1935.24	Pull rope	Soft-Fiber Polyester
						1474-8	50 pair #18, shielded pairs, IS/OS shield 600 V, XLPE insul., PVC jacket
5269	E-117	78	RGS-PVC coated conduit	30.19	1935.24	2475-3C	12 Fiber, single mode fiberoptic cable
						Pull rope	Soft-Fiber Polyester
5270	E-117	78	RGS conduit 3	1201.71	1935.24	Pull rope	Soft-Fiber Polyester
						1473-7	50 pair #18, shielded pairs, IS/OS shield 600 V, XLPE insul., PVC jacket
5271	E-117	78	RGS conduit	1201.71	1935.24	Pull rope	Soft-Fiber Polyester
						1474-7	50 pair #18, shielded pairs, IS/OS shield 600 V, XLPE insul., PVC jacket
5272	E-117	78	RGS conduit	1201.71	1935.24	1473-8	50 pair #18, shielded pairs, IS/OS shield 600 V, XLPE insul., PVC jacket
						Pull rope	Soft-Fiber Polyester
5273	E-117	53	RGS conduit	0.00	1935.24	Pull rope	Soft-Fiber Polyester
5274	E-117	78	RGS conduit	150.44	1935.24	MVDSE03A	MVDS DLC
						Pull rope	Soft-Fiber Polyester
5275	E-118	78	RGS conduit	1201.71	1935.24	2474-10	50 pair #18, shielded pairs, IS/OS shield 600 V, XLPE insul., PVC jacket
						Pull rope	Soft-Fiber Polyester
5276	E-118	78	RGS conduit	0.00	1935.24	Pull rope	Soft-Fiber Polyester
5277	E-118	78	RGS conduit	1201.71	1935.24	1473-8	50 pair #18, shielded pairs, IS/OS shield 600 V, XLPE insul., PVC jacket
						Pull rope	Soft-Fiber Polyester
5281	E-118	78	RGS conduit	307.37	1935.24	2210-5	1-3/C #14, 600 V, EPR insulation
						Pull rope	Soft-Fiber Polyester
						2201-3	1-3/C #14, 600 V, EPR insulation
						2201-4	1-9/C #16, 600 V, EPR insulation
5282	E-118	78	RGS conduit	98.10	1935.24	S-3056-9	1-4/C #14, 600 V, EPR insulation
						Pull rope	Soft-Fiber Polyester
5283	E-118	53 3	RGS conduit	527.18	879.42 3	UP208-8	1-2/C + gnd #8, 600 V, EPR insulation
						Pull rope	Soft-Fiber Polyester
						2099	1-3/C + gnd #2, 600 V, EPR insulation
5284	E-118	53 3	RGS conduit	682.38	1935.24	UP208-2	1-2/C + gnd #8, 600 V, EPR insulation
						Pull rope	Soft-Fiber Polyester
						UP208-4	1-2/C + gnd #8, 600 V, EPR insulation
						UP208-6	1-2/C + gnd #8, 600 V, EPR insulation
5285	E-118	78	RGS conduit	527.18	1935.24	2107	1-3/C + gnd #2, 600 V, EPR insulation
						Pull rope	Soft-Fiber Polyester

CONDUIT DATA

Conduit No	Reference	Size	Type	Total Fill (mm²)	Allowable Fill (mm²)	Included Cable No.	Conductor Type
5286	E-118	78	RGS conduit	1299.81	1935.24	2154	1 - 2 pair, shielded #18 with IS/OA, 300 V, PVC jacket
						1474-10	50 pair #18, shielded pairs, IS/OS shield 600 V, XLPE insul., PVC jacket
		3				Pull rope	Soft-Fiber Polyester
5287	E-118	53	RGS conduit	0.00	1935.24	Pull rope	Soft-Fiber Polyester
5289	E-118	78	RGS conduit 3	1201.71	1935.24	Pull rope	Soft-Fiber Polyester
						1473-10	50 pair #18, shielded pairs, IS/OS shield 600 V, XLPE insul., PVC jacket
5290	E-118	78	RGS conduit 3	1519.51	1935.24	1474-8A	1 - 6 pair, shielded #18 with overall shield, 300 V, PVC jacket
						1474-8B	1 - 6 pair, shielded #18 with overall shield, 300 V, PVC jacket
						1474-8	50 pair #18, shielded pairs, IS/OS shield 600 V, XLPE insul., PVC jacket
						Pull rope	Soft-Fiber Polyester
5299	E-182	41	RGS conduit	425.70	534.55	A-3032-2	3 + 1 gnd #6,#8, 600 V, RHH/RHW insulation
						A-3033-2	3 + 1 gnd #6,#8, 600 V, RHH/RHW insulation
					3	Pull rope	Soft-Fiber Polyester
5301	E-181	41	RGS conduit	0.00	534.55	Pull rope	Soft-Fiber Polyester
5302	E-181	41	RGS conduit	0.00	534.55	Pull rope	Soft-Fiber Polyester
5303	E-181	53	RGS conduit	648.58	879.42	A-3040-3	1-3/C + gnd #6, 600 V, EPR insulation
						Pull rope	Soft-Fiber Polyester
						A-3039-3	1-3/C + gnd #6, 600 V, EPR insulation
5304	E-181	53	RGS conduit	0.00	879.42	Pull rope	Soft-Fiber Polyester
5305	E-181	41	RGS conduit	212.85	534.55	Pull rope	Soft-Fiber Polyester
						LP219-2,4A	3 + 1 gnd #6,#8, 600 V, RHH/RHW insulation
5306	E-181	41	RGS conduit	440.31	534.55	UP205-6	1-2/C + gnd #8, 600 V, EPR insulation
						Pull rope	Soft-Fiber Polyester
						LP219-6,8A	3 + 1 gnd #6,#8, 600 V, RHH/RHW insulation
5307	E-181	53	RGS conduit	324.29	879.42	LP219-2,4	1-3/C + gnd #6, 600 V, EPR insulation
						Pull rope	Soft-Fiber Polyester
5308	E-181	53	RGS conduit	551.75	879.42	UP205-6	1-2/C + gnd #8, 600 V, EPR insulation
						Pull rope	Soft-Fiber Polyester
						LP219-6,8	1-3/C + gnd #6, 600 V, EPR insulation
5309	E-181	53	RGS conduit	98.10	879.42	Pull rope	Soft-Fiber Polyester
						2155	1 - 2 pair, shielded #18 with IS/OA, 300 V, PVC jacket
5310	E-181	53	RGS conduit	0.00	879.42	Pull rope	Soft-Fiber Polyester
5311	E-181	41	RGS conduit	126.88	534.55	S-2031-2	3 + 1 gnd #6,#8, 600 V, RHH/RHW insulation
						Pull rope	Soft-Fiber Polyester
						UP204-1	1-2/C + gnd #10, 600 V, EPR insulation

For continuation, see next sheet.

CONDUIT AND TRAY SCHEDULE

E-441

REVISED BY	DATE REVISED
PBP	AB
DATE 8/02	8/02

CALCULATED/DESIGNED BY — CHECKED BY

DESIGN OVERSIGHT — BEHZAD GOLEMOHAMMADI

STATE OF CALIFORNIA - DEPARTMENT OF TRANSPORTATION
Caltrans

LAST REVISION 00-00-00 — DATE PLOTTED => 3/31/2009 TIME PLOTTED => 2:25:42 PM

FOR REDUCED PLANS ORIGINAL SCALE IS IN MILLIMETERS 0 20 40 60 80

DGN FILE =>T:\13103\MS\pse\SAS Struc\CCO\SAS CCO55\04-0120f1_0396R03.dgn
USERNAME =>garciar

CU 04251 — EA 0120F1

DIST	COUNTY	ROUTE	KILOMETER POST TOTAL PROJECT	SHEET No	TOTAL SHEETS
04	SF	80	13.2/13.9	403 R2	1204

REGISTERED ELECTRICAL ENGINEER 12/19/02 DATE

12-6-04
PLANS APPROVAL DATE

REGISTERED PROFESSIONAL ENGINEER JENS ERLINGSSON No. 8249 Exp. 9/30/06 ELECTRICAL STATE OF CALIFORNIA

PB POWER, Inc.
A Parsons Brinckerhoff Company
303 Second St., Suite 700N
San Francisco, CA 94107-1317

The State of California or its officers or agents shall not be responsible for the accuracy or completeness of electronic copies of this plan sheet.

Caltrans now has a web site! To get to the web site, go to http://www.dot.ca.gov

Caltrans Metric

REGISTERED PROFESSIONAL ENGINEER FADI WALIEDDINE No. 11465 Exp. 12/31/2009 ELECTRICAL STATE OF CALIFORNIA

FOR REVISION ONLY 1 2

REQUEST FOR INFORMATION NOT ADDRESSED IN THIS CCO REMAIN IN FORCE

MARK	DATE	DESCRIPTIONS	BY	CH'D	CCO#
2	03/30/09	SERVICE PLATFORM ELECTRICAL CHANGES	RR RY	RG MP	55
1	10/03/08	STRONG MOTION SYSTEM	RG	FW	74

REVISIONS

CONTRACT CHANGE ORDER NO._____
SHEET_____ OF _____

CONDUIT DATA

Conduit No	Reference	Size	Type	Total Fill (mm2)	Allowable Fill (mm2)	Included Cable No.	Conductor Type
9060	E-366, E-367	78	RGS-PVC coated conduit	1090.66	1935.24	2900-323A	4 pair #22, shielded pairs, FEP insulation
(con't)						2900-363A	4 pair #22, shielded pairs, FEP insulation
						2900-363C	4 pair #22, shielded pairs, FEP insulation
						2900-313A	4 pair #22, shielded pairs, FEP insulation
						Pull rope	Soft-Fiber Polyester
						2900-223B	4 pair #22, shielded pairs, FEP insulation
						2900-363B	4 pair #22, shielded pairs, FEP insulation
						2900-353F	4 pair #22, shielded pairs, FEP insulation
						2900-353E	4 pair #22, shielded pairs, FEP insulation
						2900-353D	4 pair #22, shielded pairs, FEP insulation
						2900-353C	4 pair #22, shielded pairs, FEP insulation
						2900-353B	4 pair #22, shielded pairs, FEP insulation
						2900-353A	4 pair #22, shielded pairs, FEP insulation
						2900-223C	4 pair #22, shielded pairs, FEP insulation
9061	E-367	27	RGS-PVC coated conduit	142.26	229.03	2900-313C	4 pair #22, shielded pairs, FEP insulation
						Pull rope	Soft-Fiber Polyester
						2900-313B	4 pair #22, shielded pairs, FEP insulation
						2900-313A	4 pair #22, shielded pairs, FEP insulation
9062	E-365, E-367	78	RGS-PVC coated conduit	948.40	1935.24	Pull rope	Soft-Fiber Polyester
						2900-353B	4 pair #22, shielded pairs, FEP insulation
						2900-353C	4 pair #22, shielded pairs, FEP insulation
						2900-353D	4 pair #22, shielded pairs, FEP insulation
						2900-353F	4 pair #22, shielded pairs, FEP insulation
						2900-213B	4 pair #22, shielded pairs, FEP insulation
						2900-363C	4 pair #22, shielded pairs, FEP insulation
						2900-363B	4 pair #22, shielded pairs, FEP insulation
						2900-353E	4 pair #22, shielded pairs, FEP insulation
						2900-353A	4 pair #22, shielded pairs, FEP insulation
						2900-223C	4 pair #22, shielded pairs, FEP insulation
						2900-223B	4 pair #22, shielded pairs, FEP insulation
						2900-213C	4 pair #22, shielded pairs, FEP insulation
						2900-213A	4 pair #22, shielded pairs, FEP insulation
						2900-323E	4 pair #22, shielded pairs, FEP insulation
						2900-323D	4 pair #22, shielded pairs, FEP insulation
						2900-323C	4 pair #22, shielded pairs, FEP insulation
						2900-323B	4 pair #22, shielded pairs, FEP insulation
						2900-323A	4 pair #22, shielded pairs, FEP insulation
						2900-363A	4 pair #22, shielded pairs, FEP insulation
						2900-223A	4 pair #22, shielded pairs, FEP insulation
9064	E-367	41	RGS-PVC coated conduit	237.10	534.55	2900-323C	4 pair #22, shielded pairs, FEP insulation
						2900-323D	4 pair #22, shielded pairs, FEP insulation
						2900-323A	4 pair #22, shielded pairs, FEP insulation
						2900-323B	4 pair #22, shielded pairs, FEP insulation
						Pull rope	Soft-Fiber Polyester
						2900-323E	4 pair #22, shielded pairs, FEP insulation
9065	E-264A, E-366	27	RGS-PVC coated conduit	47.42	229.03	Pull rope	Soft-Fiber Polyester
						2900-292A	4 pair #22, shielded pairs, FEP insulation
9067	E-366A	27	RGS-PVC coated conduit	94.84	229.03	2900-373B	4 pair #22, shielded pairs, FEP insulation
						2900-373A	4 pair #22, shielded pairs, FEP insulation
						Pull rope	Soft-Fiber Polyester
9068	E-366A	41	RGS-PVC coated conduit	284.52	534.55		
						2900-263B	4 pair #22, shielded pairs, FEP insulation
						2900-263A	4 pair #22, shielded pairs, FEP insulation
						2900-253C	4 pair #22, shielded pairs, FEP insulation
						2900-253B	4 pair #22, shielded pairs, FEP insulation
						2900-253A	4 pair #22, shielded pairs, FEP insulation
						2900-243A	4 pair #22, shielded pairs, FEP insulation
						Pull rope	Soft-Fiber Polyester
9069	E-374	27	RGS conduit	47.42	229.03	Pull rope	Soft-Fiber Polyester
						2900-482A	4 pair #22, shielded pairs, FEP insulation
9070	E-366A	27	RGS-PVC coated conduit	142.26	229.03	2900-233A	4 pair #22, shielded pairs, FEP insulation
						2900-233B	4 pair #22, shielded pairs, FEP insulation
						2900-233C	4 pair #22, shielded pairs, FEP insulation

CONDUIT DATA

Conduit No	Reference	Size	Type	Total Fill (mm2)	Allowable Fill (mm2)	Included Cable No.	Conductor Type
9230	E-115	78	RGS-PVC coated conduit 2	1754.54	1935.24	2900-442B	4 pair #22, shielded pairs, FEP insulation
						2900-402A	4 pair #22, shielded pairs, FEP insulation
						2900-412A	4 pair #22, shielded pairs, FEP insulation
						2900-412B	4 pair #22, shielded pairs, FEP insulation
						2900-412C	4 pair #22, shielded pairs, FEP insulation
						2900-422A	4 pair #22, shielded pairs, FEP insulation
						2900-422B	4 pair #22, shielded pairs, FEP insulation
						2900-442A	4 pair #22, shielded pairs, FEP insulation
						2900-332A	4 pair #22, shielded pairs, FEP insulation
						2900-442C	4 pair #22, shielded pairs, FEP insulation
						2900-452A	4 pair #22, shielded pairs, FEP insulation
						2900-452B	4 pair #22, shielded pairs, FEP insulation
						2900-482A	4 pair #22, shielded pairs, FEP insulation
						2910-2	4 pair #22, shielded pairs, FEP insulation
						2910-3	4 pair #22, shielded pairs, FEP insulation
						Pull rope	Soft-Fiber Polyester
						2900-382C	4 pair #22, shielded pairs, FEP insulation
						2900-432A	4 pair #22, shielded pairs, FEP insulation
						2900-172A	4 pair #22, shielded pairs, FEP insulation
						2900-152A	4 pair #22, shielded pairs, FEP insulation
						2900-332C	4 pair #22, shielded pairs, FEP insulation
						2900-142A	4 pair #22, shielded pairs, FEP insulation
						2900-382B	4 pair #22, shielded pairs, FEP insulation
						2900-152B	4 pair #22, shielded pairs, FEP insulation
						2900-152C	4 pair #22, shielded pairs, FEP insulation
						2900-162B	4 pair #22, shielded pairs, FEP insulation
						2900-172B	4 pair #22, shielded pairs, FEP insulation
						2900-172C	4 pair #22, shielded pairs, FEP insulation
						2900-272C	4 pair #22, shielded pairs, FEP insulation
						2900-382A	4 pair #22, shielded pairs, FEP insulation
						2900-162A	4 pair #22, shielded pairs, FEP insulation
						2900-292A	4 pair #22, shielded pairs, FEP insulation
						2900-192A	4 pair #22, shielded pairs, FEP insulation
						2900-272B	4 pair #22, shielded pairs, FEP insulation
						2900-272A	4 pair #22, shielded pairs, FEP insulation
						2900-192C	4 pair #22, shielded pairs, FEP insulation
						2900-192B	4 pair #22, shielded pairs, FEP insulation
						2900-332B	4 pair #22, shielded pairs, FEP insulation
9230A	E-115	78	RGS-PVC coated conduit		1935.24	Pull rope	Soft-Fiber Polyester 2
9231A	E-115	78	RGS-PVC coated conduit		1935.24	Pull rope	Soft-Fiber Polyester
9231B	E-115	78	RGS-PVC coated conduit		1935.24	Pull rope	Soft-Fiber Polyester
9232A	E-115	78	RGS-PVC coated conduit		1935.24	Pull rope	Soft-Fiber Polyester

For continuation, see next sheet.

CONDUIT AND TRAY SCHEDULE

E-448

REVISED BY	DATE REVISED

CALCULATED/DESIGNED BY	DATE 8/02
PBP	8/02
CHECKED BY	AB

DESIGN OVERSIGHT
BEHZAD GOLEMOHAMMADI

STATE OF CALIFORNIA - DEPARTMENT OF TRANSPORTATION
Caltrans

LAST REVISION 00-00-00
DATE PLOTTED => 3/31/2009
TIME PLOTTED => 2:24:48 PM

FOR REDUCED PLANS ORIGINAL SCALE IS IN MILLIMETERS 0 20 40 60 80

DGN FILE =>T:\13103\MS\pse\SAS Struc\CCO\SAS CC055\04-0120f1_0403R02.dgn
USERNAME =>garciar

CU 04251 EA 0120F1

DIST	COUNTY	ROUTE	KILOMETER POST TOTAL PROJECT	SHEET No	TOTAL SHEETS
04	SF	80	13.2/13.9	407 S5	1204

REGISTERED ELECTRICAL ENGINEER 6/12/08 DATE

PLANS APPROVAL DATE

REGISTERED PROFESSIONAL ENGINEER FADI WALIEDDINE No. 11465 Exp. 12/31/2009 ELECTRICAL STATE OF CALIFORNIA

PB AMERICAS, Inc.
A Parsons Brinckerhoff Company
303 Second St., Suite 700N
San Francisco, CA 94107-1317

The State of California or its officers or agents shall not be responsible for the accuracy or completeness of electronic copies of this plan sheet.

Caltrans now has a web site! To get to the web site, go to http://www.dot.ca.gov

REQUEST FOR INFORMATION NOT ADDRESSED IN THIS CCO REMAIN IN FORCE

MARK	DATE	DESCRIPTIONS	BY	CH'D	CCO#
0	03/30/09	SERVICE PLATFORM ELECTRICAL CHANGES	RR RY	RG MP	55

REVISIONS

CONTRACT CHANGE ORDER NO._____
SHEET_____ OF _____

Caltrans Metric

CONDUIT DATA

Conduit No	Reference	Size	Type	Total Fill (mm2)	Allowable Fill (mm2)	Included Cable No.	Conductor Type
4203A	E-71A	41	RGS-PVC coated conduit		879.42	Pull rope	Soft-Fiber Polyester
4203B	E-71A	41	RGS-PVC coated conduit		879.42	Pull rope	Soft-Fiber Polyester
4203C	E-71A	41	RGS-PVC coated conduit		879.42	Pull rope	Soft-Fiber Polyester
4203D	E-71A	53	Liquidtight Flex. Metal Cond.		879.42	Pull rope	Soft-Fiber Polyester
4204A	E-71A	53	Liquidtight Flex. Metal Cond.		879.42	Pull rope	Soft-Fiber Polyester
4205A	E-71A	78	Liquidtight Flex. Metal Cond.		1935.24	Pull rope	Soft-Fiber Polyester
4206A	E-71A	78	Liquidtight Flex. Metal Cond.		1935.24	Pull rope	Soft-Fiber Polyester
4207A	E-114	78	RGS conduit		1935.24	Pull rope	Soft-Fiber Polyester
4207B	E-114	78	RGS conduit		1935.24	Pull rope	Soft-Fiber Polyester
4207C	E-114	78	RGS conduit		1935.24	Pull rope	Soft-Fiber Polyester
4207D	E-114	78	RGS conduit		1935.24	Pull rope	Soft-Fiber Polyester
4207E	E-114	78	RGS conduit		1935.24	Pull rope	Soft-Fiber Polyester
4207F	E-114	53	RGS conduit		1935.24	Pull rope	Soft-Fiber Polyester
4207G	E-114	78	RGS conduit		1935.24	Pull rope	Soft-Fiber Polyester
4207H	E-114	78	RGS conduit		1935.24	Pull rope	Soft-Fiber Polyester
4209A	E-114A	78	RGS Conduit		1935.24	Pull rope	Soft-Fiber Polyester
4209B	E-114A	78	RGS Conduit		1935.24	Pull rope	Soft-Fiber Polyester
4209C	E-114A	78	RGS Conduit		1935.24	Pull rope	Soft-Fiber Polyester
4209D	E-114A	78	RGS Conduit		1935.24	Pull rope	Soft-Fiber Polyester
4209E	E-114A	78	RGS Conduit		1935.24	Pull rope	Soft-Fiber Polyester
4209F	E-114A	78	RGS Conduit		1935.24	Pull rope	Soft-Fiber Polyester
4209G	E-114A	78	RGS Conduit		1935.24	Pull rope	Soft-Fiber Polyester
4209H	E-114A	78	RGS Conduit		1935.24	Pull rope	Soft-Fiber Polyester
4209J	E-114A	78	RGS Conduit		1935.24	Pull rope	Soft-Fiber Polyester
4209K	E-114A	78	RGS Conduit		1935.24	Pull rope	Soft-Fiber Polyester
4209L	E-114A	78	RGS Conduit		1935.24	Pull rope	Soft-Fiber Polyester

CONDUIT DATA

Conduit No	Reference	Size	Type	Total Fill (mm)	Allowable Fill (mm)	Included Cable No.	Conductor Type
4209M	E-114A	78	RGS Conduit		1935.24	Pull rope	Soft-Fiber Polyester
4210A	E-115	78	RGS Conduit		1935.24	Pull rope	Soft-Fiber Polyester
4210B	E-115	78	RGS Conduit		1935.24	Pull rope	Soft-Fiber Polyester
4210C	E-115	78	RGS Conduit		1935.24	Pull rope	Soft-Fiber Polyester
4210D	E-115	78	RGS Conduit		1935.24	Pull rope	Soft-Fiber Polyester
4210E	E-115	78	RGS Conduit		1935.24	Pull rope	Soft-Fiber Polyester
4210F	E-115	53	RGS Conduit		1935.24	Pull rope	Soft-Fiber Polyester
4210G	E-115	78	RGS Conduit		1935.24	Pull rope	Soft-Fiber Polyester
4210H	E-115	78	RGS Conduit		1935.24	Pull rope	Soft-Fiber Polyester

CONDUIT AND TRAY SCHEDULE
E-449DA

DESIGN OVERSIGHT | CALCULATED/DESIGNED BY | CHECKED BY | DATE REVISED BY | DATE REVISED

STATE OF CALIFORNIA - DEPARTMENT OF TRANSPORTATION
Caltrans

LAST REVISION 00-00-00 | DATE PLOTTED => 3/31/2009 | TIME PLOTTED => 2:24:09 PM

FOR REDUCED PLANS ORIGINAL SCALE IS IN MILLIMETERS 0 20 40 60 80

DGN FILE =>T:\13103\MS\pse\SAS Struc\CCO\SAS CCO55\04-0120f1_0407S05.dgn
USERNAME =>garciar

CU 04251 | EA 0120F1

DIST	COUNTY	ROUTE	KILOMETER POST TOTAL PROJECT	SHEET No	TOTAL SHEETS
04	SF	80	13.2/13.9	407 S6	1204

REGISTERED ELECTRICAL ENGINEER 6/12/08 DATE

PLANS APPROVAL DATE

REGISTERED PROFESSIONAL ENGINEER FADI WALIEDDINE No. 11465 Exp. 12/31/2009 ELECTRICAL STATE OF CALIFORNIA

PB AMERICAS, Inc.
A Parsons Brinckerhoff Company
303 Second St., Suite 700N
San Francisco, CA 94107-1317

The State of California or its officers or agents shall not be responsible for the accuracy or completeness of electronic copies of this plan sheet.

Caltrans now has a web site! To get to the web site, go to http://www.dot.ca.gov

Caltrans Metric

REQUEST FOR INFORMATION NOT ADDRESSED IN THIS CCO REMAIN IN FORCE

MARK	DATE	DESCRIPTIONS	BY	CH'D	CCO#
0	03/30/09	SERVICE PLATFORM ELECTRICAL CHANGES	RR RY	RG MP	55

REVISIONS

CONTRACT CHANGE ORDER NO._____
SHEET_____ OF _____

CONDUIT DATA

Conduit No	Reference	Size	Type	Total Fill (mm2)	Allowable Fill (mm2)	Included Cable No.	Conductor Type
4211A	E-114B	78	RGS Conduit		1935.24	Pull rope	Soft-Fiber Polyester
4211B	E-114B	78	RGS Conduit		1935.24	Pull rope	Soft-Fiber Polyester
4211C	E-114B	78	RGS Conduit		1935.24	Pull rope	Soft-Fiber Polyester
4211D	E-114B	78	RGS Conduit		1935.24	Pull rope	Soft-Fiber Polyester
4211E	E-114B	78	RGS Conduit		1935.24	Pull rope	Soft-Fiber Polyester
4211F	E-114B	78	RGS Conduit		1935.24	Pull rope	Soft-Fiber Polyester
4211G	E-114B	78	RGS Conduit		1935.24	Pull rope	Soft-Fiber Polyester
4211H	E-114B	78	RGS Conduit		1935.24	Pull rope	Soft-Fiber Polyester
4211J	E-114B	78	RGS Conduit		1935.24	Pull rope	Soft-Fiber Polyester
4211K	E-114B	78	RGS Conduit		1935.24	Pull rope	Soft-Fiber Polyester
4211L	E-114B	78	RGS Conduit		1935.24	Pull rope	Soft-Fiber Polyester
4211M	E-114B	78	RGS Conduit		1935.24	Pull rope	Soft-Fiber Polyester
4211N	E-114B	78	RGS Conduit		1935.24	Pull rope	Soft-Fiber Polyester
4211P	E-114B	78	RGS Conduit		1935.24	Pull rope	Soft-Fiber Polyester
4212A	E-116	78	RGS Conduit		1935.24	Pull rope	Soft-Fiber Polyester
4212B	E-116	78	RGS Conduit		1935.24	Pull rope	Soft-Fiber Polyester
4212C	E-116	78	RGS Conduit		1935.24	Pull rope	Soft-Fiber Polyester
4212D	E-116	78	RGS Conduit		1935.24	Pull rope	Soft-Fiber Polyester
4212E	E-116	78	RGS Conduit		1935.24	Pull rope	Soft-Fiber Polyester
4212F	E-116	78	RGS Conduit		1935.24	Pull rope	Soft-Fiber Polyester
4212G	E-116	78	RGS Conduit		1935.24	Pull rope	Soft-Fiber Polyester
4212H	E-116	78	RGS Conduit		1935.24	Pull rope	Soft-Fiber Polyester
4213A	E-114B	78	RGS Conduit		1935.24	Pull rope	Soft-Fiber Polyester
4213B	E-114B	78	RGS Conduit		1935.24	Pull rope	Soft-Fiber Polyester
4213C	E-114B	78	RGS Conduit		1935.24	Pull rope	Soft-Fiber Polyester
4213D	E-114B	78	RGS Conduit		1935.24	Pull rope	Soft-Fiber Polyester
4213E	E-114B	78	RGS Conduit		1935.24	Pull rope	Soft-Fiber Polyester
4213F	E-114B	78	RGS Conduit		1935.24	Pull rope	Soft-Fiber Polyester
4213G	E-114B	78	RGS Conduit		1935.24	Pull rope	Soft-Fiber Polyester

CONDUIT DATA

Conduit No	Reference	Size	Type	Total Fill (mm)	Allowable Fill (mm)	Included Cable No.	Conductor Type
4213H	E-114B	78	RGS Conduit		1935.24	Pull rope	Soft-Fiber Polyester
4213J	E-114B	78	RGS Conduit		1935.24	Pull rope	Soft-Fiber Polyester
4213K	E-114B	78	RGS Conduit		1935.24	Pull rope	Soft-Fiber Polyester
4213L	E-114B	78	RGS Conduit		1935.24	Pull rope	Soft-Fiber Polyester
4213M	E-114B	78	RGS Conduit		1935.24	Pull rope	Soft-Fiber Polyester
4213N	E-114B	78	RGS Conduit		1935.24	Pull rope	Soft-Fiber Polyester
4213P	E-114B	78	RGS Conduit		1935.24	Pull rope	Soft-Fiber Polyester
4214A	E-117	78	RGS Conduit		1935.24	Pull rope	Soft-Fiber Polyester
4214B	E-117	78	RGS Conduit		1935.24	Pull rope	Soft-Fiber Polyester
4214C	E-117	78	RGS Conduit		1935.24	Pull rope	Soft-Fiber Polyester
4214D	E-117	78	RGS Conduit		1935.24	Pull rope	Soft-Fiber Polyester
4214E	E-117	78	RGS Conduit		1935.24	Pull rope	Soft-Fiber Polyester
4214F	E-117	53	RGS Conduit		1935.24	Pull rope	Soft-Fiber Polyester
4214G	E-117	78	RGS Conduit		1935.24	Pull rope	Soft-Fiber Polyester
4214H	E-117	78	RGS Conduit		1935.24	Pull rope	Soft-Fiber Polyester

CONDUIT AND TRAY SCHEDULE

E-449DB

DESIGN OVERSIGHT

CALCULATED/DESIGNED BY | CHECKED BY

DATE | REVISED BY | DATE REVISED

STATE OF CALIFORNIA - DEPARTMENT OF TRANSPORTATION

Caltrans

LAST REVISION 00-00-00

DATE PLOTTED => 3/31/2009
TIME PLOTTED => 2:21:02 PM

FOR REDUCED PLANS ORIGINAL SCALE IS IN MILLIMETERS 0 20 40 60 80

DGN FILE =>T:\13103\MS\pse\SAS Struc\CCO\SAS CC055\04-0120f1_0407S06.dgn
USERNAME =>garciar

CU 04251

EA 0120F1

DIST	COUNTY	ROUTE	KILOMETER POST TOTAL PROJECT	SHEET No	TOTAL SHEETS
04	SF	80	13.2/13.9	407 S7	1204

REGISTERED ELECTRICAL ENGINEER 6/12/08 DATE

PLANS APPROVAL DATE

REGISTERED PROFESSIONAL ENGINEER FADI WALIEDDINE No. 11465 Exp. 12/31/2009 ELECTRICAL STATE OF CALIFORNIA

PB AMERICAS, Inc.
A Parsons Brinckerhoff Company
303 Second St., Suite 700N
San Francisco, CA 94107-1317

The State of California or its officers or agents shall not be responsible for the accuracy or completeness of electronic copies of this plan sheet.

Caltrans now has a web site! To get to the web site, go to http://www.dot.ca.gov

REQUEST FOR INFORMATION NOT ADDRESSED IN THIS CCO REMAIN IN FORCE

MARK	DATE	DESCRIPTIONS	BY	CH'D	CCO#
0	03/30/09	SERVICE PLATFORM ELECTRICAL CHANGES	RR RY	RG MP	55

REVISIONS

CONTRACT CHANGE ORDER NO._____
SHEET_____ OF _____

Caltrans Metric

CONDUIT DATA

Conduit No	Reference	Size	Type	Total Fill (mm2)	Allowable Fill (mm2)	Included Cable No.	Conductor Type
4215A	E-114B	78	RGS Conduit		1935.24	Pull rope	Soft-Fiber Polyester
4215B	E-114B	78	RGS Conduit		1935.24	Pull rope	Soft-Fiber Polyester
4215C	E-114B	78	RGS Conduit		1935.24	Pull rope	Soft-Fiber Polyester
4215D	E-114B	78	RGS Conduit		1935.24	Pull rope	Soft-Fiber Polyester
4215E	E-114B	78	RGS Conduit		1935.24	Pull rope	Soft-Fiber Polyester
4215F	E-114B	78	RGS Conduit		1935.24	Pull rope	Soft-Fiber Polyester
4215G	E-114B	78	RGS Conduit		1935.24	Pull rope	Soft-Fiber Polyester
4215H	E-114B	78	RGS Conduit		1935.24	Pull rope	Soft-Fiber Polyester
4215J	E-114B	78	RGS Conduit		1935.24	Pull rope	Soft-Fiber Polyester
4215K	E-114B	78	RGS Conduit		1935.24	Pull rope	Soft-Fiber Polyester
4215L	E-114B	78	RGS Conduit		1935.24	Pull rope	Soft-Fiber Polyester
4215M	E-114B	78	RGS Conduit		1935.24	Pull rope	Soft-Fiber Polyester
4215N	E-114B	78	RGS Conduit		1935.24	Pull rope	Soft-Fiber Polyester
4215P	E-114B	78	RGS Conduit		1935.24	Pull rope	Soft-Fiber Polyester
4216A	E-118	78	RGS Conduit		1935.24	Pull rope	Soft-Fiber Polyester
4216B	E-118	78	RGS Conduit		1935.24	Pull rope	Soft-Fiber Polyester
4216C	E-118	78	RGS Conduit		1935.24	Pull rope	Soft-Fiber Polyester
4216D	E-118	78	RGS Conduit		1935.24	Pull rope	Soft-Fiber Polyester
4216E	E-118	78	RGS Conduit		1935.24	Pull rope	Soft-Fiber Polyester
4216F	E-118	53	RGS Conduit		1935.24	Pull rope	Soft-Fiber Polyester
4216G	E-118	78	RGS Conduit		1935.24	Pull rope	Soft-Fiber Polyester
4216H	E-118	78	RGS Conduit		1935.24	Pull rope	Soft-Fiber Polyester
4217A	E-114B	78	RGS Conduit		1935.24	Pull rope	Soft-Fiber Polyester
4217B	E-114B	78	RGS Conduit		1935.24	Pull rope	Soft-Fiber Polyester
4217C	E-114B	78	RGS Conduit		1935.24	Pull rope	Soft-Fiber Polyester
4217D	E-114B	78	RGS Conduit		1935.24	Pull rope	Soft-Fiber Polyester
4217E	E-114B	78	RGS Conduit		1935.24	Pull rope	Soft-Fiber Polyester
4217F	E-114B	78	RGS Conduit		1935.24	Pull rope	Soft-Fiber Polyester
4217G	E-114B	78	RGS Conduit		1935.24	Pull rope	Soft-Fiber Polyester

CONDUIT DATA

Conduit No	Reference	Size	Type	Total Fill (mm)	Allowable Fill (mm)	Included Cable No.	Conductor Type
4217H	E-114B	78	RGS Conduit		1935.24	Pull rope	Soft-Fiber Polyester
4217J	E-114B	78	RGS Conduit		1935.24	Pull rope	Soft-Fiber Polyester
4217K	E-114B	78	RGS Conduit		1935.24	Pull rope	Soft-Fiber Polyester
4217L	E-114B	78	RGS Conduit		1935.24	Pull rope	Soft-Fiber Polyester
4217M	E-114B	78	RGS Conduit		1935.24	Pull rope	Soft-Fiber Polyester
4217N	E-114B	78	RGS Conduit		1935.24	Pull rope	Soft-Fiber Polyester
4217P	E-114B	78	RGS Conduit		1935.24	Pull rope	Soft-Fiber Polyester
4223A	E-72A	41	RGS-PVC coated conduit	308.53	879.42	Pull rope	Soft-Fiber Polyester
						1098-2	4-1/C #4 + G, 600 V, RHH/RHW insulation
4223B	E-72A	41	RGS-PVC coated conduit	262.68	879.42	Pull rope	Soft-Fiber Polyester
						1098-1	3/C #8 + G, 600 V, RHH/RHW insulation
4223C	E-72A	41	RGS-PVC coated conduit		879.42	Pull rope	Soft-Fiber Polyester
4223D	E-72A	53	Liquidtight Flex. Metal Cond.		879.42	Pull rope	Soft-Fiber Polyester
4224A	E-72A	78	Liquidtight Flex. Metal Cond.		1935.24	Pull rope	Soft-Fiber Polyester
4225A	E-72A	78	Liquidtight Flex. Metal Cond.		1935.24	Pull rope	Soft-Fiber Polyester
4226A	E-72A	78	Liquidtight Flex. Metal Cond.		1935.24	Pull rope	Soft-Fiber Polyester

CONDUIT AND TRAY SCHEDULE
E-449DC

DATE	REVISED BY	DATE REVISED

CALCULATED/DESIGNED BY
CHECKED BY

DESIGN OVERSIGHT

STATE OF CALIFORNIA - DEPARTMENT OF TRANSPORTATION
Caltrans

LAST REVISION 00-00-00
DATE PLOTTED => 3/31/2009
TIME PLOTTED => 2:20:17 PM

FOR REDUCED PLANS ORIGINAL SCALE IS IN MILLIMETERS 0 20 40 60 80

DGN FILE =>T:\13103\MS\pse\SAS Struc\CCO\SAS CCO55\04-0120f1_0407S07.dgn
USERNAME =>garciar

CU 04251 | EA 0120F1

DIST	COUNTY	ROUTE	KILOMETER POST TOTAL PROJECT	SHEET No	TOTAL SHEETS
04	SF	80	13.2/13.9	407 S8	1204

REGISTERED ELECTRICAL ENGINEER — DATE 6/12/08

PLANS APPROVAL DATE

REGISTERED PROFESSIONAL ENGINEER — FADI WALIEDDINE No. 11465 Exp. 12/31/2009 ELECTRICAL — STATE OF CALIFORNIA

PB AMERICAS, Inc.
A Parsons Brinckerhoff Company
303 Second St., Suite 700N
San Francisco, CA 94107-1317

The State of California or its officers or agents shall not be responsible for the accuracy or completeness of electronic copies of this plan sheet.

Caltrans now has a web site! To get to the web site, go to http://www.dot.ca.gov

Caltrans Metric

REQUEST FOR INFORMATION NOT ADDRESSED IN THIS CCO REMAIN IN FORCE

MARK	DATE	DESCRIPTIONS	BY	CH'D	CCO#
0	03/30/09	SERVICE PLATFORM ELECTRICAL CHANGES	RR RY	RG MP	55

REVISIONS

CONTRACT CHANGE ORDER NO._____
SHEET_____ OF _____

CONDUIT DATA

Conduit No	Reference	Size	Type	Total Fill (mm2)	Allowable Fill (mm2)	Included Cable No.	Conductor Type
4243A	E-73A	41	RGS-PVC coated conduit	308.53	879.42	Pull rope	Soft-Fiber Polyester
						1097-2	4-1/C #4 + G, 600 V, RHH/RHW insulation
4243B	E-73A	41	RGS-PVC coated conduit	262.68	879.42	Pull rope	Soft-Fiber Polyester
						1097-1	3/C #8 + G, 600 V, RHH/RHW insulation
4243C	E-73A	41	RGS-PVC coated conduit		879.42	Pull rope	Soft-Fiber Polyester
4243D	E-73A	53	Liquidtight Flex. Metal Cond.		879.42	Pull rope	Soft-Fiber Polyester
4244A	E-73A	53	Liquidtight Flex. Metal Cond.		879.42	Pull rope	Soft-Fiber Polyester
4245A	E-73A	78	Liquidtight Flex. Metal Cond.		1935.24	Pull rope	Soft-Fiber Polyester
4246A	E-73A	78	Liquidtight Flex. Metal Cond.		1935.24	Pull rope	Soft-Fiber Polyester
4263A	E-74A	41	RGS-PVC coated conduit		879.42	Pull rope	Soft-Fiber Polyester
4263B	E-74A	41	RGS-PVC coated conduit		879.42	Pull rope	Soft-Fiber Polyester
4263C	E-74A	41	RGS-PVC coated conduit		879.42	Pull rope	Soft-Fiber Polyester
4263D	E-74A	53	Liquidtight Flex. Metal Cond.		879.42	Pull rope	Soft-Fiber Polyester
4264A	E-74A	53	Liquidtight Flex. Metal Cond.		879.42	Pull rope	Soft-Fiber Polyester
4265A	E-74A	78	Liquidtight Flex. Metal Cond.		1935.24	Pull rope	Soft-Fiber Polyester
4266A	E-74A	78	Liquidtight Flex. Metal Cond.		1935.24	Pull rope	Soft-Fiber Polyester
4283A	E-75A	41	RGS-PVC coated conduit		879.42	Pull rope	Soft-Fiber Polyester
4283B	E-75A	41	RGS-PVC coated conduit		879.42	Pull rope	Soft-Fiber Polyester
4283C	E-75A	41	RGS-PVC coated conduit		879.42	Pull rope	Soft-Fiber Polyester
4283D	E-75A	53	Liquidtight Flex. Metal Cond.		879.42	Pull rope	Soft-Fiber Polyester
4284A	E-75A	53	Liquidtight Flex. Metal Cond.		879.42	Pull rope	Soft-Fiber Polyester
4285A	E-75A	78	Liquidtight Flex. Metal Cond.		1935.24	Pull rope	Soft-Fiber Polyester

CONDUIT DATA

Conduit No	Reference	Size	Type	Total Fill (mm)	Allowable Fill (mm)	Included Cable No.	Conductor Type
4286A	E-75A	78	Liquidtight Flex. Metal Cond.		1935.24	Pull rope	Soft-Fiber Polyester
5200A	E-75A	78	Liquidtight Flex. Metal Cond.		1935.24	Pull rope	Soft-Fiber Polyester
5200B	E-75A	78	Liquidtight Flex. Metal Cond.		1935.24	Pull rope	Soft-Fiber Polyester
5203A	E-71A, E-114	41	RGS-PVC coated conduit		534.55	Pull rope	Soft-Fiber Polyester
5203B	E-71A, E-114	41	RGS-PVC coated conduit		534.55	Pull rope	Soft-Fiber Polyester
5203C	E-71A, E-114	41	RGS-PVC coated conduit		534.55	Pull rope	Soft-Fiber Polyester
5203D	E-71A	53	Liquidtight Flex. Metal Cond.		879.42	Pull rope	Soft-Fiber Polyester
5203E	E-71A	41	RGS-PVC coated conduit		534.55	Pull rope	Soft-Fiber Polyester
5204A	E-71A	53	Liquidtight Flex. Metal Cond.		879.42	Pull rope	Soft-Fiber Polyester
5205A	E-71A, E-114	41	RGS-PVC coated conduit		534.55	Pull rope	Soft-Fiber Polyester
5205B	E-71A	41	RGS-PVC coated conduit		534.55	Pull rope	Soft-Fiber Polyester
5205C	E-71A, E-114	41	RGS-PVC coated conduit		534.55	Pull rope	Soft-Fiber Polyester
5205D	E-71A	53	Liquidtight Flex. Metal Cond.		879.42	Pull rope	Soft-Fiber Polyester
5205E	E-71A	41	RGS-PVC coated conduit		534.55	Pull rope	Soft-Fiber Polyester
5207A	E-71A	78	Liquidtight Flex. Metal Cond.		1935.24	Pull rope	Soft-Fiber Polyester

CONDUIT AND TRAY SCHEDULE
E-449DD

DATE | REVISED BY | DATE | REVISED
CALCULATED/DESIGNED BY | CHECKED BY
DESIGN OVERSIGHT

STATE OF CALIFORNIA - DEPARTMENT OF TRANSPORTATION
Caltrans

FOR REDUCED PLANS ORIGINAL SCALE IS IN MILLIMETERS 0 20 40 60 80

DGN FILE =>T:\13103\MS\pse\SAS Struc\CCO\SAS CCO55\04-0120f1_0407S08.dgn
USERNAME =>garciar

CU 04251 | EA 0120F1

LAST REVISION 00-00-00
DATE PLOTTED => 3/31/2009
TIME PLOTTED => 1:45:17 PM

DIST	COUNTY	ROUTE	KILOMETER POST TOTAL PROJECT	SHEET No	TOTAL SHEETS
04	SF	80	13.2/13.9	407 S9	1204

REGISTERED ELECTRICAL ENGINEER — DATE 6/12/08

PLANS APPROVAL DATE

REGISTERED PROFESSIONAL ENGINEER — FADI WALIEDDINE No. 11465 Exp. 12/31/2009 ELECTRICAL — STATE OF CALIFORNIA

PB AMERICAS, Inc.
A Parsons Brinckerhoff Company
303 Second St., Suite 700N
San Francisco, CA 94107-1317

The State of California or its officers or agents shall not be responsible for the accuracy or completeness of electronic copies of this plan sheet.

Caltrans now has a web site! To get to the web site, go to http://www.dot.ca.gov

Caltrans Metric

REQUEST FOR INFORMATION NOT ADDRESSED IN THIS CCO REMAIN IN FORCE

MARK	DATE	DESCRIPTIONS	BY	CH'D	CCO#
0	03/30/09	SERVICE PLATFORM ELECTRICAL CHANGES	RR RY	RG FW	55

REVISIONS

CONTRACT CHANGE ORDER NO._____
SHEET_____ OF _____

CONDUIT DATA

Conduit No	Reference	Size	Type	Total Fill (mm2)	Allowable Fill (mm2)	Included Cable No.	Conductor Type
5212A	E-114A	78	RGS Conduit		1935.24	Pull rope	Soft-Fiber Polyester
5212B	E-114A	53	RGS Conduit		1935.24	Pull rope	Soft-Fiber Polyester
5212C	E-114A	53	RGS Conduit		1935.24	Pull rope	Soft-Fiber Polyester
5212D	E-114A	78	RGS Conduit		1935.24	Pull rope	Soft-Fiber Polyester
5212E	E-114A	78	RGS Conduit		1935.24	Pull rope	Soft-Fiber Polyester
5212F	E-114A	78	RGS Conduit		1935.24	Pull rope	Soft-Fiber Polyester
5212G	E-114A	78	RGS Conduit		1935.24	Pull rope	Soft-Fiber Polyester
5212H	E-114A	78	RGS Conduit		1935.24	Pull rope	Soft-Fiber Polyester
5212J	E-114A	78	RGS Conduit		1935.24	Pull rope	Soft-Fiber Polyester
5212K	E-114A	78	RGS Conduit		1935.24	Pull rope	Soft-Fiber Polyester
5212L	E-114A	78	RGS Conduit		1935.24	Pull rope	Soft-Fiber Polyester
5212M	E-114A	78	RGS Conduit		1935.24	Pull rope	Soft-Fiber Polyester
5212N	E-114A	78	RGS Conduit		1935.24	Pull rope	Soft-Fiber Polyester
5212P	E-114A	78	RGS Conduit		1935.24	Pull rope	Soft-Fiber Polyester
5212Q	E-114A	78	RGS Conduit		1935.24	Pull rope	Soft-Fiber Polyester
5212R	E-114A	78	RGS Conduit		1935.24	Pull rope	Soft-Fiber Polyester
5212S	E-114A	78	RGS Conduit		1935.24	Pull rope	Soft-Fiber Polyester
5212T	E-114A	78	RGS Conduit		1935.24	Pull rope	Soft-Fiber Polyester
5212U	E-114A	78	RGS Conduit		1935.24	Pull rope	Soft-Fiber Polyester
5214A	E-115	78	RGS Conduit		1935.24	Pull rope	Soft-Fiber Polyester
5214B	E-115	78	RGS Conduit		1935.24	Pull rope	Soft-Fiber Polyester
5214C	E-115	78	RGS Conduit		1935.24	Pull rope	Soft-Fiber Polyester
5214D	E-115	78	RGS Conduit		1935.24	Pull rope	Soft-Fiber Polyester
5215A	E-114B	78	RGS Conduit		1935.24	Pull rope	Soft-Fiber Polyester
5215B	E-114B	78	RGS Conduit		1935.24	Pull rope	Soft-Fiber Polyester
5215C	E-114B	53	RGS Conduit		1935.24	Pull rope	Soft-Fiber Polyester
5215D	E-114B	78	RGS Conduit		1935.24	Pull rope	Soft-Fiber Polyester
5215E	E-114B	78	RGS Conduit		1935.24	Pull rope	Soft-Fiber Polyester
5215F	E-114B	78	RGS Conduit		1935.24	Pull rope	Soft-Fiber Polyester
5215G	E-114B	78	RGS Conduit		1935.24	Pull rope	Soft-Fiber Polyester
5215H	E-114B	78	RGS Conduit		1935.24	Pull rope	Soft-Fiber Polyester

CONDUIT DATA

Conduit No	Reference	Size	Type	Total Fill (mm)	Allowable Fill (mm)	Included Cable No.	Conductor Type
5215J	E-114B	78	RGS Conduit		1935.24	Pull rope	Soft-Fiber Polyester
5215K	E-114B	78	RGS Conduit		1935.24	Pull rope	Soft-Fiber Polyester
5215L	E-114B	78	RGS Conduit		1935.24	Pull rope	Soft-Fiber Polyester
5215M	E-114B	78	RGS Conduit		1935.24	Pull rope	Soft-Fiber Polyester
5216A	E-116	78	RGS Conduit		1935.24	Pull rope	Soft-Fiber Polyester
5216B	E-116	78	RGS Conduit		1935.24	Pull rope	Soft-Fiber Polyester
5216C	E-116	78	RGS Conduit		1935.24	Pull rope	Soft-Fiber Polyester
5216D	E-116	78	RGS Conduit		1935.24	Pull rope	Soft-Fiber Polyester
5216E	E-116	78	RGS Conduit		1935.24	Pull rope	Soft-Fiber Polyester
5217A	E-114B	78	RGS Conduit		1935.24	Pull rope	Soft-Fiber Polyester
5217B	E-114B	78	RGS Conduit		1935.24	Pull rope	Soft-Fiber Polyester
5217C	E-114B	78	RGS Conduit		1935.24	Pull rope	Soft-Fiber Polyester
5217D	E-114B	78	RGS Conduit		1935.24	Pull rope	Soft-Fiber Polyester
5217E	E-114B	78	RGS Conduit		1935.24	Pull rope	Soft-Fiber Polyester
5212F	E-114B	78	RGS Conduit		1935.24	Pull rope	Soft-Fiber Polyester
5217G	E-114B	78	RGS Conduit		1935.24	Pull rope	Soft-Fiber Polyester
5217H	E-114B	78	RGS Conduit		1935.24	Pull rope	Soft-Fiber Polyester
5217J	E-114B	78	RGS Conduit		1935.24	Pull rope	Soft-Fiber Polyester
5217K	E-114B	78	RGS Conduit		1935.24	Pull rope	Soft-Fiber Polyester
5217L	E-114B	78	RGS Conduit		1935.24	Pull rope	Soft-Fiber Polyester

CONDUIT AND TRAY SCHEDULE
E-449DE

STATE OF CALIFORNIA - DEPARTMENT OF TRANSPORTATION
Caltrans

DESIGN OVERSIGHT

CALCULATED/DESIGNED BY | CHECKED BY | DATE | REVISED BY | DATE REVISED

LAST REVISION 00-00-00 | DATE PLOTTED => 3/31/2009 | TIME PLOTTED => 1:40:18 PM

FOR REDUCED PLANS ORIGINAL SCALE IS IN MILLIMETERS 0 20 40 60 80

DGN FILE =>T:\13103\MS\pse\SAS Struc\CCO\SAS CCO55\04-0120f1_0407S09.dgn
USERNAME =>garciar

CU 04251 | EA 0120F1

CONDUIT DATA

Conduit No	Reference	Size	Type	Total Fill (mm2)	Allowable Fill (mm2)	Included Cable No.	Conductor Type
5217M	E-114B	78	RGS Conduit		1935.24	Pull rope	Soft-Fiber Polyester
5217N	E-114B	78	RGS Conduit		1935.24	Pull rope	Soft-Fiber Polyester
5217P	E-114B	78	RGS Conduit		1935.24	Pull rope	Soft-Fiber Polyester
5218A	E-117	78	RGS Conduit		1935.24	Pull rope	Soft-Fiber Polyester
5218B	E-117	78	RGS Conduit		1935.24	Pull rope	Soft-Fiber Polyester
5218C	E-117	53	RGS Conduit		1935.24	Pull rope	Soft-Fiber Polyester
5218D	E-117	78	RGS Conduit		1935.24	Pull rope	Soft-Fiber Polyester
5218E	E-117	78	RGS Conduit		1935.24	Pull rope	Soft-Fiber Polyester
5219A	E-114B	78	RGS Conduit		1935.24	Pull rope	Soft-Fiber Polyester
5219B	E-114B	78	RGS Conduit		1935.24	Pull rope	Soft-Fiber Polyester
5219C	E-114B	78	RGS Conduit		1935.24	Pull rope	Soft-Fiber Polyester
5219D	E-114B	78	RGS Conduit		1935.24	Pull rope	Soft-Fiber Polyester
5219E	E-114B	78	RGS Conduit		1935.24	Pull rope	Soft-Fiber Polyester
5219F	E-114B	78	RGS Conduit		1935.24	Pull rope	Soft-Fiber Polyester
5219G	E-114B	78	RGS Conduit		1935.24	Pull rope	Soft-Fiber Polyester
5219H	E-114B	78	RGS Conduit		1935.24	Pull rope	Soft-Fiber Polyester
5219J	E-114B	78	RGS Conduit		1935.24	Pull rope	Soft-Fiber Polyester
5219K	E-114B	78	RGS Conduit		1935.24	Pull rope	Soft-Fiber Polyester
5219L	E-114B	78	RGS Conduit		1935.24	Pull rope	Soft-Fiber Polyester
5219M	E-114B	78	RGS Conduit		1935.24	Pull rope	Soft-Fiber Polyester
5219N	E-114B	78	RGS Conduit		1935.24	Pull rope	Soft-Fiber Polyester
5219P	E-114B	78	RGS Conduit		1935.24	Pull rope	Soft-Fiber Polyester
5220A	E-118	78	RGS Conduit		1935.24	Pull rope	Soft-Fiber Polyester
5220B	E-118	78	RGS Conduit		1935.24	Pull rope	Soft-Fiber Polyester
5220C	E-118	53	RGS Conduit		1935.24	Pull rope	Soft-Fiber Polyester
5220D	E-118	78	RGS Conduit		1935.24	Pull rope	Soft-Fiber Polyester
5220E	E-118	78	RGS Conduit		1935.24	Pull rope	Soft-Fiber Polyester

REQUEST FOR INFORMATION NOT ADDRESSED IN THIS CCO REMAIN IN FORCE

MARK	DATE	DESCRIPTIONS	BY	CH'D	CCO#
0	03/30/09	SERVICE PLATFORM ELECTRICAL CHANGES	RR RY	RG MP	55

REVISIONS

CONTRACT CHANGE ORDER NO._____
SHEET_____ OF _____

Caltrans Metric

DIST	COUNTY	ROUTE	KILOMETER POST TOTAL PROJECT	SHEET No	TOTAL SHEETS
04	SF	80	13.2/13.9	407 S10	1204

REGISTERED ELECTRICAL ENGINEER — 6/12/08 DATE

PLANS APPROVAL DATE

REGISTERED PROFESSIONAL ENGINEER — FADI WALIEDDINE No. 11465 Exp. 12/31/2009 ELECTRICAL — STATE OF CALIFORNIA

PB AMERICAS, Inc.
A Parsons Brinckerhoff Company
303 Second St., Suite 700N
San Francisco, CA 94107-1317

The State of California or its officers or agents shall not be responsible for the accuracy or completeness of electronic copies of this plan sheet.

Caltrans now has a web site! To get to the web site, go to http://www.dot.ca.gov

CONDUIT DATA

Conduit No	Reference	Size	Type	Total Fill (mm)	Allowable Fill (mm)	Included Cable No.	Conductor Type
5223A	E-72A, E-115	41	RGS-PVC coated conduit		534.55	Pull rope	Soft-Fiber Polyester
5223B	E-72A	41	RGS-PVC coated conduit		534.55	Pull rope	Soft-Fiber Polyester
5223C	E-72A, E-115	41	RGS-PVC coated conduit		534.55	Pull rope	Soft-Fiber Polyester
5223D	E-72A	53	Liquidtight Flex. Metal Cond.		879.42	Pull rope	Soft-Fiber Polyester
5223E	E-72A	41	RGS-PVC coated conduit		534.55	Pull rope	Soft-Fiber Polyester
5224A	E-72	53	Liquidtight Flex. Metal Cond.		879.42	Pull rope	Soft-Fiber Polyester
5225A	E-72A, E-115	41	RGS-PVC coated conduit		534.55	Pull rope	Soft-Fiber Polyester
5225B	E-72A	41	RGS-PVC coated conduit		534.55	Pull rope	Soft-Fiber Polyester
5225C	E-72A, E-115	41	RGS-PVC coated conduit		534.55	Pull rope	Soft-Fiber Polyester
5225D	E-72A	53	Liquidtight Flex. Metal Cond.		879.42	Pull rope	Soft-Fiber Polyester
5225E	E-72A	41	RGS-PVC coated conduit		534.55	Pull rope	Soft-Fiber Polyester
5226A	E-72A	78	Liquidtight Flex. Metal Cond.		1935.24	Pull rope	Soft-Fiber Polyester
5227A	E-72A	78	Liquidtight Flex. Metal Cond.		1935.24	Pull rope	Soft-Fiber Polyester
5230A	E-71A	78	Liquidtight Flex. Metal Cond.		1935.24	Pull rope	Soft-Fiber Polyester
5231A	E-71A	78	Liquidtight Flex. Metal Cond.		1935.24	Pull rope	Soft-Fiber Polyester
5233A	E-72A	78	Liquidtight Flex. Metal Cond.		1935.24	Pull rope	Soft-Fiber Polyester
5234A	E-72A	41	Liquidtight Flex. Metal Cond.		534.55	Pull rope	Soft-Fiber Polyester
5235A	E-72A	41	Liquidtight Flex. Metal Cond.		534.55	Pull rope	Soft-Fiber Polyester
5236A	E-73A	78	Liquidtight Flex. Metal Cond.		1935.24	Pull rope	Soft-Fiber Polyester
5237A	E-73A	78	Liquidtight Flex. Metal Cond.		1935.24	Pull rope	Soft-Fiber Polyester
5238A	E-73A	41	Liquidtight Flex. Metal Cond.		534.55	Pull rope	Soft-Fiber Polyester

CONDUIT AND TRAY SCHEDULE
E-449DF

DATE | REVISED BY | DATE REVISED
CALCULATED/DESIGNED BY | CHECKED BY
DESIGN OVERSIGHT

STATE OF CALIFORNIA - DEPARTMENT OF TRANSPORTATION
Caltrans

LAST REVISION 00-00-00 | DATE PLOTTED => 3/31/2009 TIME PLOTTED => 1:38:32 PM

FOR REDUCED PLANS ORIGINAL SCALE IS IN MILLIMETERS 0 20 40 60 80

DGN FILE =>T:\13103\MS\pse\SAS Struc\CCO\SAS CCO55\04-0120f1_0407S10.dgn
USERNAME =>garciar

CU 04251 | EA 0120F1

CONDUIT DATA

Conduit No	Reference	Size	Type	Total Fill (mm2)	Allowable Fill (mm2)	Included Cable No.	Conductor Type
5241A	E-73A, E-117	41	RGS-PVC coated conduit		534.55	Pull rope	Soft-Fiber Polyester
5241B	E-73A	41	RGS-PVC coated conduit		534.55	Pull rope	Soft-Fiber Polyester
5241C	E-73A, E-117	41	RGS-PVC coated conduit		534.55	Pull rope	Soft-Fiber Polyester
5241D	E-73A	53	Liquidtight Flex. Metal Cond.		879.42	Pull rope	Soft-Fiber Polyester
5241E	E-73A	41	RGS-PVC coated conduit		534.55	Pull rope	Soft-Fiber Polyester
5243A	E-73A, E-117	41	RGS-PVC coated conduit	308.53	879.42	Pull rope	Soft-Fiber Polyester
						2097-2	4-1/C #4 + G, 600 V, RHH/RHW insulation
5243B	E-73A, E-117	41	RGS-PVC coated conduit	262.68	879.42	Pull rope	Soft-Fiber Polyester
						2097-1	3/C #8 + G, 600 V, RHH/RHW insulation
5243C	E-73A, E-117	41	RGS-PVC coated conduit	476.76	879.42	Pull rope	Soft-Fiber Polyester
						2097-3	4-1/C #4 + G, 600 V, RHH/RHW insulation
5243D	E-73A	53	Liquidtight Flex. Metal Cond.	624.31	879.42	Pull rope	Soft-Fiber Polyester
							1-4/C + G #2, 600V, EPR insulation
5243E	E-73A	41	RGS-PVC coated conduit		534.55	Pull rope	Soft-Fiber Polyester
5244A	E-73A	53	Liquidtight Flex. Metal Cond.		879.42	Pull rope	Soft-Fiber Polyester
5245A	E-73A	78	Liquidtight Flex. Metal Cond.		1935.24	Pull rope	Soft-Fiber Polyester
5246A	E-73A	41	Liquidtight Flex. Metal Cond.		534.55	Pull rope	Soft-Fiber Polyester
5247A	E-73A	78	Liquidtight Flex. Metal Cond.		1935.24	Pull rope	Soft-Fiber Polyester
5263A	E-74A	41	RGS-PVC coated conduit	308.53	534.55	Pull rope	Soft-Fiber Polyester
						2098-2	4-1/C #4 + G, 600 V, RHH/RHW insulation
5263B	E-74A	41	RGS-PVC coated conduit	262.68	534.55	Pull rope	Soft-Fiber Polyester
						2098-1	3/C #8 + G, 600 V, RHH/RHW insulation
5263C	E-74A	41	RGS-PVC coated conduit	476.76	534.55	Pull rope	Soft-Fiber Polyester
						2098-3	4-1/C #4 + G, 600 V, RHH/RHW insulation
5263D	E-74A	53	Liquidtight Flex. Metal Cond.		879.42	Pull rope	Soft-Fiber Polyester
5263E	E-74A	41	RGS-PVC coated conduit		534.55	Pull rope	Soft-Fiber Polyester

REQUEST FOR INFORMATION NOT ADDRESSED IN THIS CCO REMAIN IN FORCE

MARK	DATE	DESCRIPTIONS	BY	CH'D	CCO#
0	03/30/09	SERVICE PLATFORM ELECTRICAL CHANGES	RR RY	RG MP	55

REVISIONS

CONTRACT CHANGE ORDER NO._____
SHEET_____ OF _____

Caltrans Metric

DIST	COUNTY	ROUTE	KILOMETER POST TOTAL PROJECT	SHEET No	TOTAL SHEETS
04	SF	80	13.2/13.9	407 S11	1204

REGISTERED ELECTRICAL ENGINEER — 6/12/08 DATE

PLANS APPROVAL DATE

REGISTERED PROFESSIONAL ENGINEER — FADI WALIEDDINE No. 11465 Exp. 12/31/2009 ELECTRICAL — STATE OF CALIFORNIA

PB AMERICAS, Inc.
A Parsons Brinckerhoff Company
303 Second St., Suite 700N
San Francisco, CA 94107-1317

The State of California or its officers or agents shall not be responsible for the accuracy or completeness of electronic copies of this plan sheet.

Caltrans now has a web site! To get to the web site, go to http://www.dot.ca.gov

CONDUIT DATA

Conduit No	Reference	Size	Type	Total Fill (mm)	Allowable Fill (mm)	Included Cable No.	Conductor Type
5264A	E-74A	53	Liquidtight Flex. Metal Cond.		879.42	Pull rope	Soft-Fiber Polyester
5265A	E-74A	41	RGS-PVC coated conduit		534.55	Pull rope	Soft-Fiber Polyester
5265B	E-74A	41	RGS-PVC coated conduit		534.55	Pull rope	Soft-Fiber Polyester
5265C	E-74A	41	RGS-PVC coated conduit		534.55	Pull rope	Soft-Fiber Polyester
5265D	E-74A	53	Liquidtight Flex. Metal Cond.		879.42	Pull rope	Soft-Fiber Polyester
5265E	E-74A	41	RGS-PVC coated conduit		534.55	Pull rope	Soft-Fiber Polyester
5266A	E-74A	78	Liquidtight Flex. Metal Cond.		1935.24	Pull rope	Soft-Fiber Polyester
5270A	E-74A	41	Liquidtight Flex. Metal Cond.		534.55	Pull rope	Soft-Fiber Polyester
5271A	E-74A	41	Liquidtight Flex. Metal Cond.		534.55	Pull rope	Soft-Fiber Polyester

CONDUIT AND TRAY SCHEDULE

E-449DG

STATE OF CALIFORNIA - DEPARTMENT OF TRANSPORTATION
Caltrans

DESIGN OVERSIGHT
CALCULATED/DESIGNED BY
CHECKED BY
DATE
REVISED BY
DATE REVISED

LAST REVISION 00-00-00
DATE PLOTTED => 3/31/2009
TIME PLOTTED => 1:37:27 PM

FOR REDUCED PLANS ORIGINAL SCALE IS IN MILLIMETERS 0 20 40 60 80

DGN FILE =>T:\13103\MS\pse\SAS Struc\CCO\SAS CCO55\04-0120f1_0407S11.dgn
USERNAME =>garciar

CU 04251 | EA 0120F1

DIST	COUNTY	ROUTE	KILOMETER POST TOTAL PROJECT	SHEET No	TOTAL SHEETS
04	SF	80	13.2/13.9	407 S12	1204

REGISTERED ELECTRICAL ENGINEER 6/12/08 DATE

PLANS APPROVAL DATE

REGISTERED PROFESSIONAL ENGINEER FADI WALIEDDINE No. 11465 Exp. 12/31/2009 ELECTRICAL STATE OF CALIFORNIA

PB AMERICAS, Inc.
A Parsons Brinckerhoff Company
303 Second St., Suite 700N
San Francisco, CA 94107-1317

The State of California or its officers or agents shall not be responsible for the accuracy or completeness of electronic copies of this plan sheet.

Caltrans now has a web site! To get to the web site, go to http://www.dot.ca.gov

Caltrans Metric

REQUEST FOR INFORMATION NOT ADDRESSED IN THIS CCO REMAIN IN FORCE

MARK	DATE	DESCRIPTIONS	BY	CH'D	CCO#
0	03/30/09	SERVICE PLATFORM ELECTRICAL CHANGES	RR RY	RG MP	55

REVISIONS

CONTRACT CHANGE ORDER NO._____
SHEET_____ OF _____

CONDUIT DATA

Conduit No	Reference	Size	Type	Total Fill (mm²)	Allowable Fill (mm²)	Included Cable No.	Conductor Type
	E-75A						
5272A	E-74A	78	Liquidtight Flex. Metal Cond.		1935.24	Pull rope	Soft-Fiber Polyester
5273A	E-74A	78	Liquidtight Flex. Metal Cond.		1935.24	Pull rope	Soft-Fiber Polyester
5283A	E-75A	41	RGS-PVC coated conduit	308.53	879.42	Pull rope	Soft-Fiber Polyester
						2098-2	4-1/C #4 + G, 600 V, RHH/RHW insulation
5283B	E-75A	41	RGS-PVC coated conduit	262.68	879.42	Pull rope	Soft-Fiber Polyester
						2098-1	3/C #8 + G, 600 V, RHH/RHW insulation
5283C	E-75A	41	RGS-PVC coated conduit	476.76	879.42	Pull rope	Soft-Fiber Polyester
						2098-3	4-1/C #4 + G, 600 V, RHH/RHW insulation
5283D	E-75A	53	Liquidtight Flex. Metal Cond.		879.42	Pull rope	Soft-Fiber Polyester
5283E	E-75A	41	Liquidtight Flex. Metal Cond.		534.55	Pull rope	Soft-Fiber Polyester
5284A	E-75A	53	RGS-PVC coated conduit		879.42	Pull rope	Soft-Fiber Polyester
5285A	E-75A, E-118	41	Liquidtight Flex. Metal Cond.		534.55	Pull rope	Soft-Fiber Polyester
5285B	E-75A	41	RGS-PVC coated conduit		534.55	Pull rope	Soft-Fiber Polyester
5285C	E-75A, E-118	41	RGS-PVC coated conduit		534.55	Pull rope	Soft-Fiber Polyester
5285D	E-75A	53	Liquidtight Flex. Metal Cond.		879.42	Pull rope	Soft-Fiber Polyester
5285E	E-75A	41	RGS-PVC coated conduit		534.55	Pull rope	Soft-Fiber Polyester
5286A	E-75A	78	Liquidtight Flex. Metal Cond.		1935.42	Pull rope	Soft-Fiber Polyester
5289A	E-75A	41	Liquidtight Flex. Metal Cond.		534.55	Pull rope	Soft-Fiber Polyester
5290A	E-75A	41	Liquidtight Flex. Metal Cond.		534.55	Pull rope	Soft-Fiber Polyester

CONDUIT DATA

Conduit No	Reference	Size	Type	Total Fill (mm²)	Allowable Fill (mm²)	Included Cable No.	Conductor Type
5300A	E-114B	78	RGS Conduit		1935.24	Pull rope	Soft-Fiber Polyester
5300B	E-114B	78	RGS Conduit		1935.24	Pull rope	Soft-Fiber Polyester
5300C	E-114B	78	RGS Conduit		1935.24	Pull rope	Soft-Fiber Polyester
5300D	E-114B	78	RGS Conduit		1935.24	Pull rope	Soft-Fiber Polyester
5300E	E-114B	78	RGS Conduit		1935.24	Pull rope	Soft-Fiber Polyester
5300F	E-114B	78	RGS Conduit		1935.24	Pull rope	Soft-Fiber Polyester
5300G	E-114B	78	RGS Conduit		1935.24	Pull rope	Soft-Fiber Polyester
5300H	E-114B	78	RGS Conduit		1935.24	Pull rope	Soft-Fiber Polyester
5300J	E-114B	78	RGS Conduit		1935.24	Pull rope	Soft-Fiber Polyester
5300K	E-114B	78	RGS Conduit		1935.24	Pull rope	Soft-Fiber Polyester
5300L	E-114B	78	RGS Conduit		1935.24	Pull rope	Soft-Fiber Polyester
5300M	E-114B	78	RGS Conduit		1935.24	Pull rope	Soft-Fiber Polyester
5300N	E-114B	78	RGS Conduit		1935.24	Pull rope	Soft-Fiber Polyester
5300P	E-114B	78	RGS Conduit		1935.24	Pull rope	Soft-Fiber Polyester

CONDUIT AND TRAY SCHEDULE
E-449DH

STATE OF CALIFORNIA - DEPARTMENT OF TRANSPORTATION
Caltrans

DESIGN OVERSIGHT

CALCULATED/DESIGNED BY | CHECKED BY

DATE | REVISED BY | DATE REVISED

LAST REVISION 00-00-00

DATE PLOTTED => 3/31/2009
TIME PLOTTED => 1:35:56 PM

FOR REDUCED PLANS ORIGINAL SCALE IS IN MILLIMETERS 0 20 40 60 80

DGN FILE =>T:\13103\MS\pse\SAS Struc\CCO\SAS CCO55\04-0120f1_0407S12.dgn
USERNAME =>garciar

CU 04251

EA 0120F1

DIST	COUNTY	ROUTE	KILOMETER POST TOTAL PROJECT	SHEET No	TOTAL SHEETS
04	SF	80	13.2/13.9	407 S13	1204

REGISTERED ELECTRICAL ENGINEER 6/12/08 DATE

PLANS APPROVAL DATE

REGISTERED PROFESSIONAL ENGINEER FADI WALIEDDINE No. 11465 Exp. 12/31/2009 ELECTRICAL STATE OF CALIFORNIA

PB AMERICAS, Inc.
A Parsons Brinckerhoff Company
303 Second St., Suite 700N
San Francisco, CA 94107-1317

The State of California or its officers or agents shall not be responsible for the accuracy or completeness of electronic copies of this plan sheet.

Caltrans now has a web site! To get to the web site, go to http://www.dot.ca.gov

Caltrans Metric

REQUEST FOR INFORMATION NOT ADDRESSED IN THIS CCO REMAIN IN FORCE

MARK	DATE	DESCRIPTIONS	BY	CH'D	CCO#
0	03/30/09	SERVICE PLATFORM ELECTRICAL CHANGES	RR RY	RG MP	55

REVISIONS

CONTRACT CHANGE ORDER NO. _____
SHEET _____ OF _____

CONDUIT DATA

Conduit No	Reference	Size	Type	Total Fill (mm²)	Allowable Fill (mm²)	Included Cable No.	Conductor Type
1T4WA	E-71, E-71A	203	203x203mm stainless steel wireway		8387.08		
1T4WA1	E-71, E71A	203	203x203mm stainless steel wireway		8387.08		
1T4WB	E-71, E71A	150	152x152 mm stainless steel wireway		4193.54		
1T4WB1	E-71, E71A	150	152x152 mm stainless steel wireway		4193.54		
1T5WA	E-72, E-72A	203	203x203mm stainless steel wireway		8387.08		
1T5WA1	E-72, E-72A	203	203x203mm stainless steel wireway		8387.08		
1T5WB	E-72, E-72A	150	152x152 mm stainless steel wireway		4193.54		
1T5WB1	E-72, E-72A	150	152x152 mm stainless steel wireway		4193.54		
1T6WA	E-73, E-73A	203	203x203mm stainless steel wireway		8387.08		
1T6WA1	E-73, E-73A	203	203x203mm stainless steel wireway		8387.08		
1T6WB	E-73, E-73A	150	152x152 mm stainless steel wireway		4193.54		
1T6WB1	E-73, E-73A	150	152x152 mm stainless steel wireway		4193.54		
1T7WA	E-74, E-74A	203	203x203mm stainless steel wireway		8387.08		
1T7WA1	E-74, E-74A	203	203x203mm stainless steel wireway		8387.08		
1T7WB	E-74, E-74A	150	152x152 mm stainless steel wireway		4193.54		
1T7WB1	E-74, E-74A	150	152x152 mm stainless steel wireway		4193.54		
1T8WA	E-75, E-75A	203	203x203mm stainless steel wireway		8387.08		
1T8WA1	E-75, E-75A	203	203x203mm stainless steel wireway		8387.08		
1T8WB	E-75, E-75A	150	152x152 mm stainless steel wireway		4193.54		
1T8WB1	E-75, E-75A	150	152x152 mm stainless steel wireway		4193.54		
2T4EA	E-71, E-71A	203	203x203mm stainless steel wireway		8387.08		
2T4EA1	E-71, E-71A	203	203x203mm stainless steel wireway		8387.08		
2T4EB	E-71, E-71A	150	152x152 mm stainless steel wireway		4193.54		
2T4EB1	E-71, E-71A	150	152x152 mm stainless steel wireway		4193.54		
2T5EA	E-72, E-72A	203	203x203mm stainless steel wireway		8387.08		
2T5EA1	E-72, E-72A	203	203x203mm stainless steel wireway		8387.08		
2T5EB	E-72, E-72A	150	152x152 mm stainless steel wireway		4193.54		
2T5EB1	E-72, E-72A	150	152x152 mm stainless steel wireway		4193.54		
2T6EA	E-73, E-73A	203	203x203mm stainless steel wireway		8387.08		
2T6EA1	E-73, E-73A	203	203x203mm stainless steel wireway		8387.08		
2T6EB	E-73, E-73A	150	152x152 mm stainless steel wireway		4193.54		

CONDUIT DATA

Conduit No	Reference	Size	Type	Total Fill (mm)	Allowable Fill (mm)	Included Cable No.	Conductor Type
2T6EB1	E-73, E-73A	150	152x152 mm stainless steel wireway		4193.54		
2T7EA	E-74, E-74A	203	203x203mm stainless steel wireway		8387.08		
2T7EA1	E-74, E-74A	203	203x203mm stainless steel wireway		8387.08		
2T7EB	E-74, E-74A	150	152x152 mm stainless steel wireway		4193.54		
2T7EB1	E-74, E-74A	150	152x152 mm stainless steel wireway		4193.54		
2T8EA	E-75, E-75A	203	203x203mm stainless steel wireway		8387.08		
2T8EA1	E-75, E-75A	203	203x203mm stainless steel wireway		8387.08		
2T8EB	E-75, E-75A	150	152x152 mm stainless steel wireway		4193.54		
2T8EB1	E-75, E-75A	150	152x152 mm stainless steel wireway		4193.54		

CONDUIT AND TRAY SCHEDULE

E-449DJ

DATE	REVISED BY	DATE	REVISED BY
XXX	XXX	XXX	XXX
XXX	XXX	XXX	XXX

CALCULATED/DESIGNED BY XXX XXX
CHECKED BY XXX XXX

DESIGN OVERSIGHT XXXXXXXXXX

STATE OF CALIFORNIA - DEPARTMENT OF TRANSPORTATION
Caltrans

LAST REVISION 00-00-00
DATE PLOTTED => 3/31/2009
TIME PLOTTED => 1:35:21 PM

FOR REDUCED PLANS ORIGINAL SCALE IS IN MILLIMETERS 0 20 40 60 80

DGN FILE =>T:\13103\MS\pse\SAS Struc\CCO\SAS CCO55\04-0120f1_0407S13.dgn
USERNAME =>garciar

CU 04251 EA 0120F1

DIST	COUNTY	ROUTE	KILOMETER POST TOTAL PROJECT	SHEET No	TOTAL SHEETS
04	SF	80	13.2/13.9	407 S14	1204

REGISTERED ELECTRICAL ENGINEER — DATE 6/12/08

PLANS APPROVAL DATE

REGISTERED PROFESSIONAL ENGINEER — FADI WALIEDDINE No. 11465 Exp. 12/31/2009 ELECTRICAL — STATE OF CALIFORNIA

PB AMERICAS, Inc.
A Parsons Brinckerhoff Company
303 Second St., Suite 700N
San Francisco, CA 94107-1317

The State of California or its officers or agents shall not be responsible for the accuracy or completeness of electronic copies of this plan sheet.

Caltrans now has a web site! To get to the web site, go to http://www.dot.ca.gov

Caltrans Metric

REQUEST FOR INFORMATION NOT ADDRESSED IN THIS CCO REMAIN IN FORCE

MARK	DATE	DESCRIPTIONS	BY	CH'D	CCO#
0	03/30/09	SERVICE PLATFORM ELECTRICAL CHANGES	RR RY	RG MP	55

REVISIONS

CONTRACT CHANGE ORDER NO._____

SHEET_____ OF _____

CONDUIT DATA

Conduit No	Reference	Size	Type	Total Fill (mm2)	Allowable Fill (mm2)	Included Cable No.	Conductor Type
0T24	E-114	610	152.4 mm siderail ladder tray		16774.16		
1T24A	E-114, E-114A	610	152.4 mm siderail ladder tray		16774.16		
2T24A	E-114, E-114A	610	152.4 mm siderail ladder tray		16774.16		
2T24B	E-114A	610	152.4 mm siderail ladder tray		16774.16		
1T25A	E-114B, E-115	610	152.4 mm siderail ladder tray		16774.16		
1T25B	E-114B	610	152.4 mm siderail ladder tray		16774.16		
2T25A	E-115, E-118	610	152.4 mm siderail ladder tray		16774.16		
2T25B	E-115, E-118	610	152.4 mm siderail ladder tray		16774.16		
0T26	E-116	610	152.4 mm siderail ladder tray		16774.16		
1T26A	E-116	610	152.4 mm siderail ladder tray		16774.16		
1T26B	E-114B	610	152.4 mm siderail ladder tray		16774.16		
2T26A	E-114B, E-116	610	152.4 mm siderail ladder tray		16774.16		
2T26B	E-114B	610	152.4 mm siderail ladder tray		16774.16		
0T27	E-117	610	152.4 mm siderail ladder tray		16774.16		
1T27A	E-117	610	152.4 mm siderail ladder tray		16774.16		
1T27B	E-114B	610	152.4 mm siderail ladder tray		16774.16		
2T27A	E-114B, E-117	610	152.4 mm siderail ladder tray		16774.16		
2T27B	E-114B	610	152.4 mm siderail ladder tray		16774.16		

CONDUIT DATA

Conduit No	Reference	Size	Type	Total Fill (mm)	Allowable Fill (mm)	Included Cable No.	Conductor Type
0T28	E-118	610	152.4 mm siderail ladder tray		16774.16		
1T28A	E-114B, E-118	610	152.4 mm siderail ladder tray		16774.16		
1T28B	E-114B	610	152.4 mm siderail ladder tray		16774.16		
2T28A	E-114B, E-118	610	152.4 mm siderail ladder tray		16774.16		
2T28B	E-114B	610	152.4 mm siderail ladder tray		16774.16		
0T44	E-114	610	152.4 mm siderail ladder tray		16774.16		
1T44A	E-114, E-114A	610	152.4 mm siderail ladder tray		16774.16		
1T44B	E-114B	610	152.4 mm siderail ladder tray		16774.16		
2T44A	E-114, E-114A,B	610	152.4 mm siderail ladder tray		16774.16		
2T44B	E-114A,E-114B	610	152.4 mm siderail ladder tray		16774.16		

CONDUIT AND TRAY SCHEDULE

E-449DK

DATE	REVISED BY	DATE	REVISED BY
XXX	XXX	XXX	XXX
XXX	XXX	XXX	XXX

CALCULATED/DESIGNED BY	CHECKED BY
XXX	XXX

DESIGN OVERSIGHT XXXXXXXXXXX

STATE OF CALIFORNIA - DEPARTMENT OF TRANSPORTATION

Caltrans

LAST REVISION 00-00-00 — DATE PLOTTED => 3/31/2009 TIME PLOTTED => 1:34:46 PM

FOR REDUCED PLANS ORIGINAL SCALE IS IN MILLIMETERS 0 20 40 60 80

DGN FILE =>T:\13103\MS\pse\SAS Struc\CCO\SAS CCO55\04-0120f1_0407S14.dgn
USERNAME =>garciar

CU 04251 — EA 0120F1

CONDUIT DATA

Conduit No	Reference	Size	Type	Total Fill (mm2)	Allowable Fill (mm2)	Included Cable No.	Conductor Type
0T45	E-115	610	152.4 mm siderail ladder tray		16774.16		
1T45A	E-114B, E-115	610	152.4 mm siderail ladder tray		16774.16		
1T45B	E-114B	610	152.4 mm siderail ladder tray		16774.16		
2T45	E-114B	610	152.4 mm siderail ladder tray		16774.16		
2T45A	E-114B, E-115	610	152.4 mm siderail ladder tray		16774.16		
2T45B	E-114B	610	152.4 mm siderail ladder tray		16774.16		
0T46	E-116	610	152.4 mm siderail ladder tray		16774.16		
1T46A	E-114A, E-116	610	152.4 mm siderail ladder tray		16774.16		
1T46B	E-114,E-114A,B	610	152.4 mm siderail ladder tray		16774.16		
2T46A	E-114B, E-116	610	152.4 mm siderail ladder tray		16774.16		
2T46B	E-114	610	152.4 mm siderail ladder tray		16774.16		
0T47	E-117	610	152.4 mm siderail ladder tray		16774.16		
1T47A	E-117	610	152.4 mm siderail ladder tray		16774.16		
1T47B	E-114	610	152.4 mm siderail ladder tray		16774.16		
2T47A	E-114B, E-117	610	152.4 mm siderail ladder tray		16774.16		
2T47B	E-114B	610	152.4 mm siderail ladder tray		16774.16		
0T48	E-118	610	152.4 mm siderail ladder tray		16774.16		
1T48A	E-118	610	152.4 mm siderail ladder tray		16774.16		
2T48A	E-114B, E-118	610	152.4 mm siderail ladder tray		16774.16		
2T48B	E-118	610	152.4 mm siderail ladder tray		16774.16		

REQUEST FOR INFORMATION NOT ADDRESSED IN THIS CCO REMAIN IN FORCE

MARK	DATE	DESCRIPTIONS	BY	CH'D	CCO#
0	03/30/09	SERVICE PLATFORM ELECTRICAL CHANGES	RR RY	RG MP	55

REVISIONS

CONTRACT CHANGE ORDER NO._____
SHEET_____ OF _____

Caltrans Metric

DIST	COUNTY	ROUTE	KILOMETER POST TOTAL PROJECT	SHEET No	TOTAL SHEETS
04	SF	80	13.2/13.9	407 S15	1204

REGISTERED ELECTRICAL ENGINEER — 6/12/08 DATE

PLANS APPROVAL DATE

REGISTERED PROFESSIONAL ENGINEER — FADI WALIEDDINE No. 11465 Exp. 12/31/2009 ELECTRICAL — STATE OF CALIFORNIA

PB AMERICAS, Inc.
A Parsons Brinckerhoff Company
303 Second St., Suite 700N
San Francisco, CA 94107-1317

The State of California or its officers or agents shall not be responsible for the accuracy or completeness of electronic copies of this plan sheet.

Caltrans now has a web site! To get to the web site, go to http://www.dot.ca.gov

CONDUIT DATA

Conduit No	Reference	Size	Type	Total Fill (mm)	Allowable Fill (mm)	Included Cable No.	Conductor Type

CONDUIT AND TRAY SCHEDULE
E-449DL

DATE	REVISED BY	DATE	REVISED BY
XXX	XXX	XXX	XXX
XXX	XXX	XXX	XXX

CALCULATED/DESIGNED BY XXX — CHECKED BY XXX

DESIGN OVERSIGHT
BEHZAD GOLEMOHAMMADI

STATE OF CALIFORNIA - DEPARTMENT OF TRANSPORTATION
Caltrans

LAST REVISION 00-00-00 — DATE PLOTTED => 3/31/2009 TIME PLOTTED => 1:34:11 PM

FOR REDUCED PLANS ORIGINAL SCALE IS IN MILLIMETERS 0 20 40 60 80

DGN FILE =>T:\13103\MS\pse\SAS Struc\CCO\SAS CCO55\04-0120f1_0407S15.dgn
USERNAME =>garciar

CU 04251 — EA 0120F1

DIST.	COUNTY	ROUTE	KILOMETER POST TOTAL PROJECT	SHEET NO.	TOTAL SHEETS
04	SF	80	13.2/13.9	660R2	1204

Caltrans Metric

George Baker
REGISTERED ENGINEER - CIVIL
1-27-03
PLANS APPROVAL DATE

REGISTERED PROFESSIONAL ENGINEER George S. Baker No. C 57112 Exp. 12/31/05 CIVIL STATE OF CALIFORNIA

The State of California or its officers or agents shall not be responsible for the accuracy or completeness of electronic copies of this plan sheet.

T.Y. LIN / MOFFATT & NICHOL
825 BATTERY STREET
SAN FRANCISCO, CA 94111

Caltrans now has a web site! To get to the web site, go to: http://www.dot.ca.gov

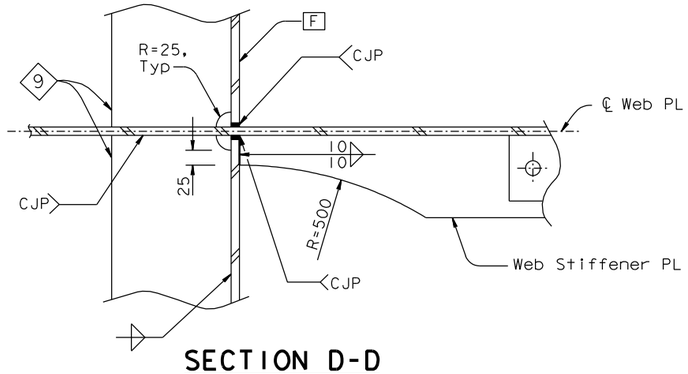

SECTION D-D
1:5

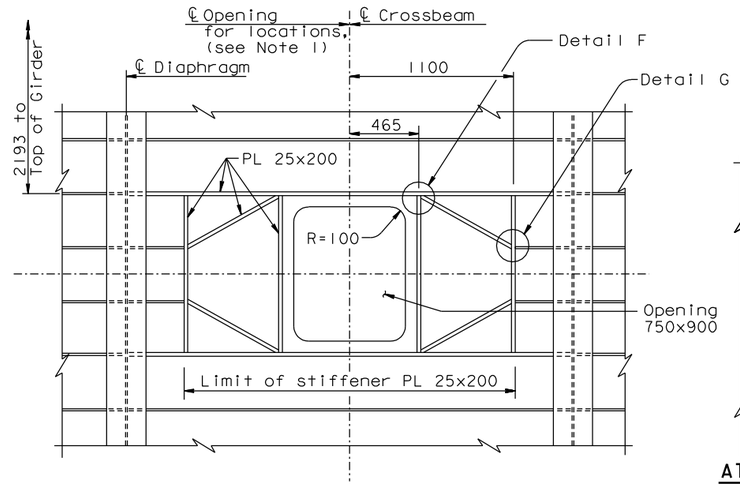

EXTERIOR WEB PLATES

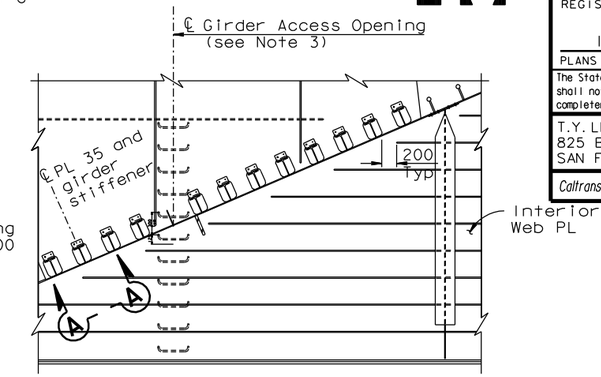

AT INTERIOR WEB PLATE ONLY (see Note 3)

DETAIL D
1:20

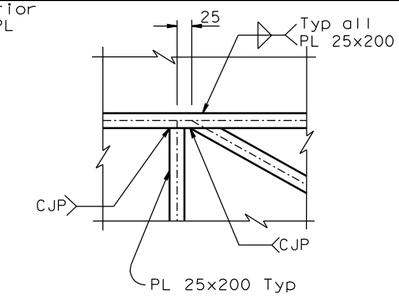

DETAIL F
1:5

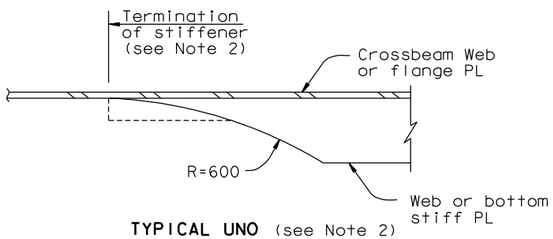

TYPICAL UNO (see Note 2)

STIFFENER TERMINATION DETAIL
1:10

Daniel J. Turner
REGISTERED PROFESSIONAL ENGINEER Daniel J. Turner No. C 65033 Exp. 06/30/09 CIVIL STATE OF CALIFORNIA

FOR REVISIONS ONLY

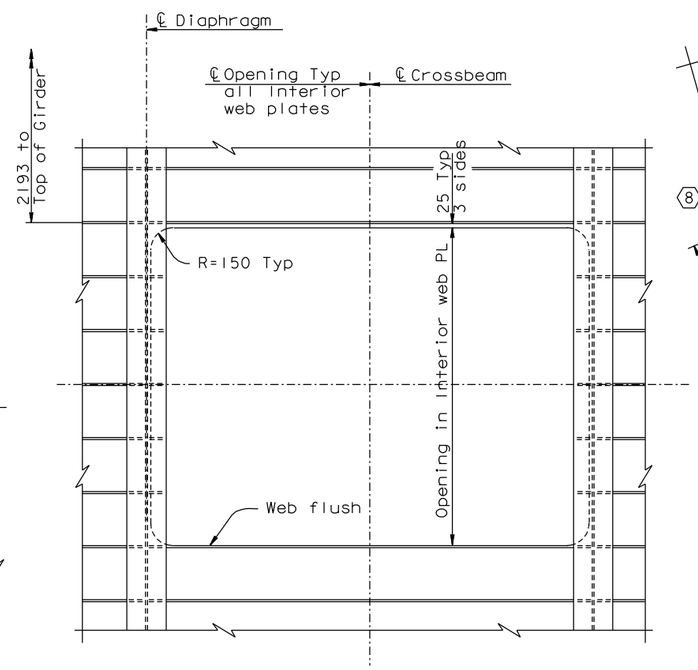

INTERIOR WEB PLATES

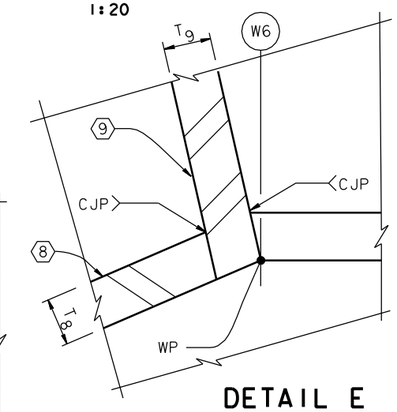

DETAIL E
1:1

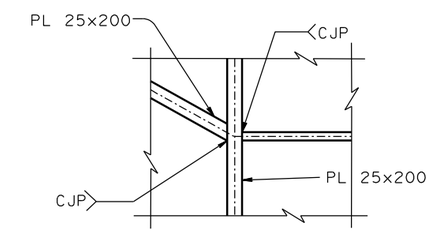

DETAIL G
1:5

REQUESTS FOR INFORMATION NOT ADDRESSED IN THIS CCO REMAIN IN FORCE					
2	06/13/08	SERVICE PLATFORM ELECTRICAL CHANGES	DT	GB	55
1	04/02/07	CROSSBEAM KINK	GB	DT	38
MARK	DATE	DESCRIPTIONS	BY	CH'D	CCO#
REVISIONS					

CONTRACT CHANGE ORDER NO. ____
SHEET ___ OF ___

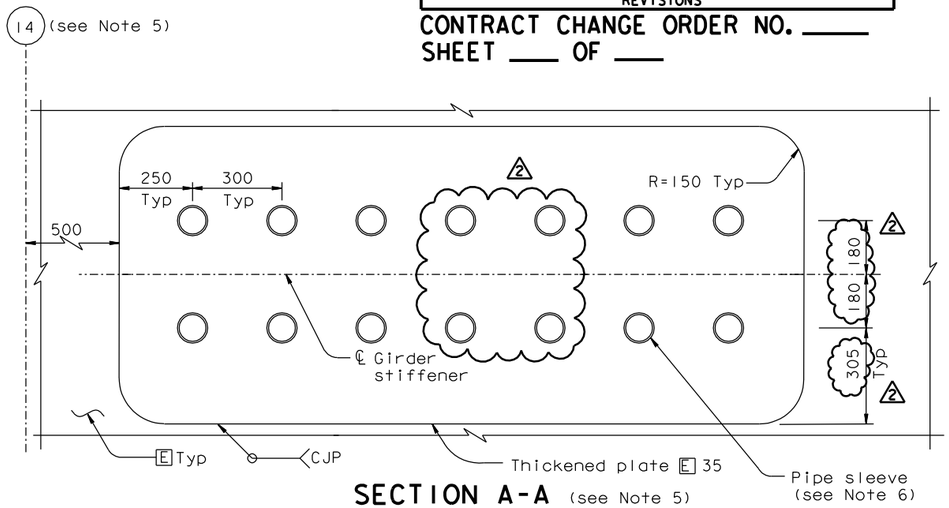

SECTION A-A (see Note 5)
1:10

ACCESS OPENING IN CROSSBEAM WEB PLATES

DETAIL C
1:20

NOTES:

1. For location of crossbeam access openings in exterior crossbeam web plates, see "Girder Access Details No. 1" sheet.
2. For Stiffener termination details not shown, see "Typical Girder Details No. 16" sheet.
3. For girder details at girder access opening, see "Typical Girder Details No. 15" sheet.
4. For details not shown, see "Access Opening With Door At Vertical Face Of Tower Strut Facade" and "Access Opening Door Detail" on "Tower Access Details No. 4" sheet.
5. At utility platform locations, panel points 14, 32, 50, 80, and 110, plate E shall be thickened as shown. The thickened plate shall be flush on the inside of the OBG. (2)
6. For pipe sleeve details, see "Utility Details No. 1" sheet.

ALL DIMENSIONS ARE IN MILLIMETERS UNLESS OTHERWISE SHOWN

R. Valizadeh/V. Toan/Y.L./W.L./F.C.
DESIGN OVERSIGHT
SIGN OFF DATE 06/13/08

	BY	CHECKED
DESIGN	G. Baker	P. Ritchie
DETAILS	D. Veytsman	T. McMeans
QUANTITIES	G. Baker	M. Roberts

PREPARED FOR THE STATE OF CALIFORNIA DEPARTMENT OF TRANSPORTATION

R. Manzanarez
PROJECT ENGINEER

BRIDGE NO. 34-0006L/R
KILOMETER POST 13.2/13.9

SAN FRANCISCO OAKLAND BAY BRIDGE
EAST SPAN SEISMIC SAFETY PROJECT
SELF-ANCHORED SUSPENSION BRIDGE
(SUPERSTRUCTURE & TOWER)

TYPICAL CROSSBEAM DETAILS NO. 6

Rev. Date: 5-18-98

ORIGINAL SCALE IN MILLIMETERS FOR REDUCED PLANS 0 10 20 30 40 50 60 70 80 90 100

CU 04
EA 0120F1

DISREGARD PRINTS BEARING EARLIER REVISION DATES

REVISION DATES (PRELIMINARY STAGE ONLY): 08/07/99 05/31/01 04/08/02 07/01/02 12/19/02 11/13/05

SHEET 243R2 OF

FILE => L:\BB\04-012001\SAS\Contract Plans and CCO\CCO\In Progress\CCO#55\Original 06-13-08\DGN\agcrs08.dgn

100% PS&E

USERNAME => vignatovsky DATE PLOTTED => 13 JUN 2008 TIME PLOTTED => 13:17:37