DIST	COUNTY	ROUTE	KILOMETER POST TOTAL PROJECT	SHEET No	TOTAL SHEETS
04	SF	80	13.2/13.9	75S1	1204

Caltrans Metric

Gregory Benkovich 09/10/10
REGISTERED CIVIL ENGINEER

PLANS APPROVAL DATE

REGISTERED PROFESSIONAL ENGINEER Gregory Benkovich No. 40518 Exp. 3/31/11 CIVIL STATE OF CALIFORNIA

The State of California or its officers or agents shall not be responsible for the accuracy or completeness of electronic copies of this plan sheet.

Parsons Brinckerhoff Quade & Douglas, Inc.
303 Second Street, Suite 700N
San Francisco, CA 94107

Caltrans now has a web site! To get to the web site, go to: http://www.dot.ca.gov

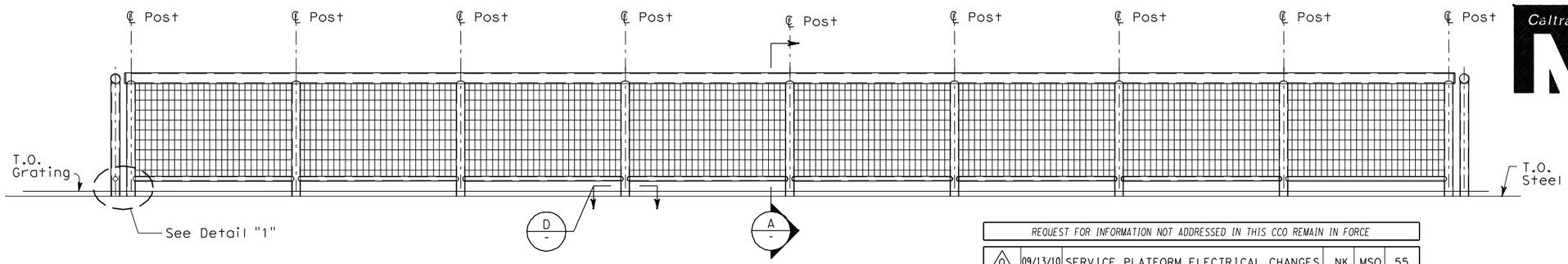

1 / AS-2 **ELEVATION**
SCALE: 1:25

REQUEST FOR INFORMATION NOT ADDRESSED IN THIS CCO REMAIN IN FORCE					
0	09/13/10	SERVICE PLATFORM ELECTRICAL CHANGES	NK	MSO	55
MARK	DATE	DESCRIPTIONS	BY	CH'D	CCO#
REVISIONS					

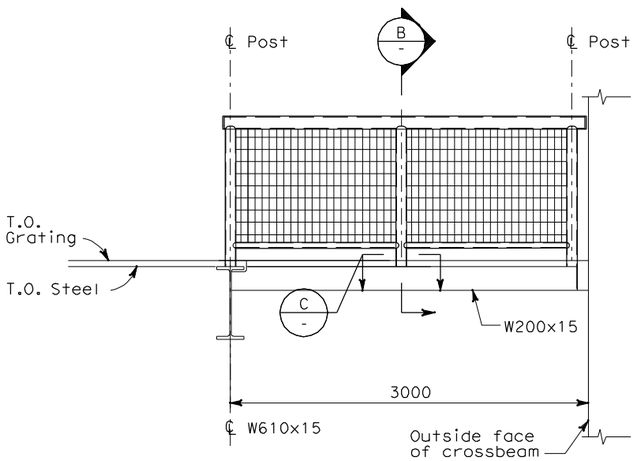

2 / - **ELEVATION**
SCALE: 1:25

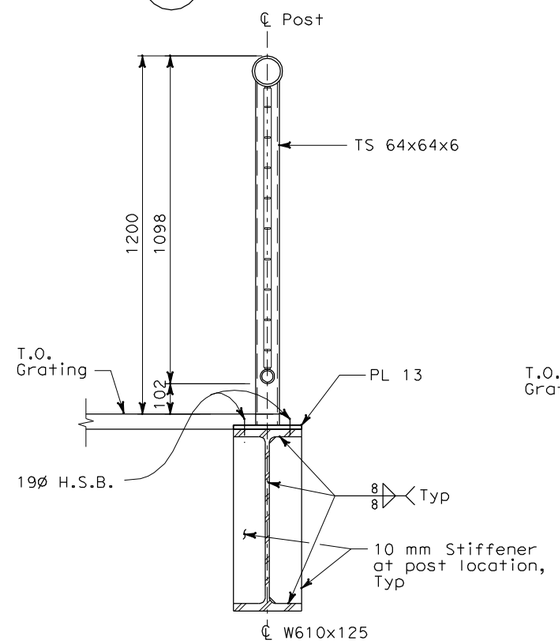

A / - **SECTION**
SCALE: 1:10

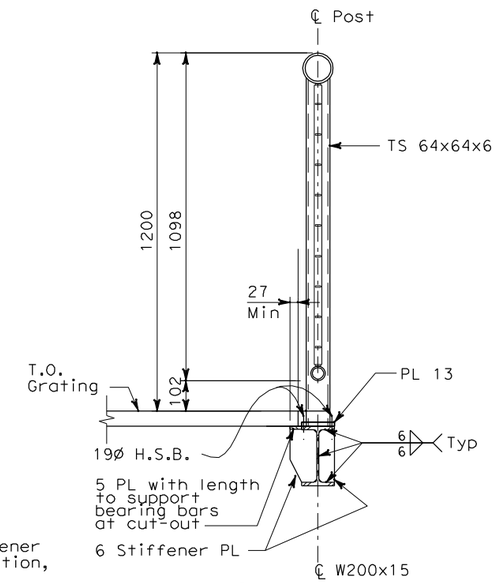

B / - **SECTION**
SCALE: 1:10

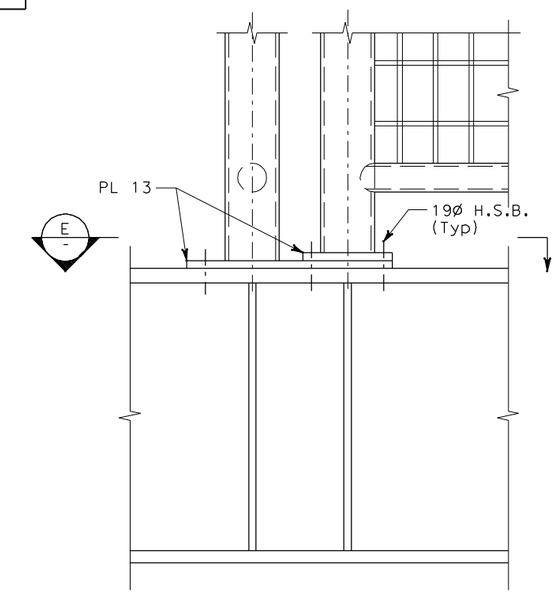

I / - **DETAIL**
NOT TO SCALE

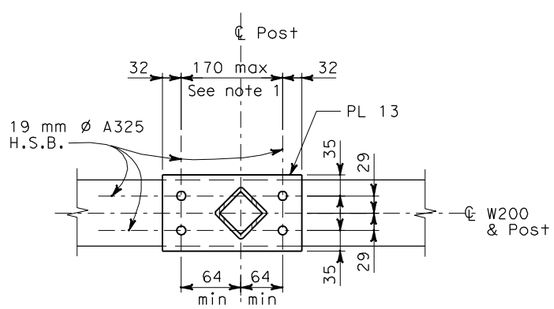

Typ for posts bearing on W200

C / - **SECTION**
SCALE: 1:5

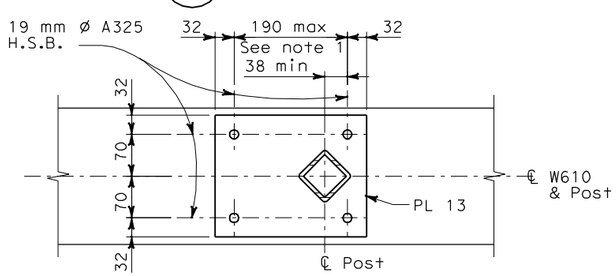

Typ for posts bearing on W610

D / - **SECTION**
SCALE: 1:5

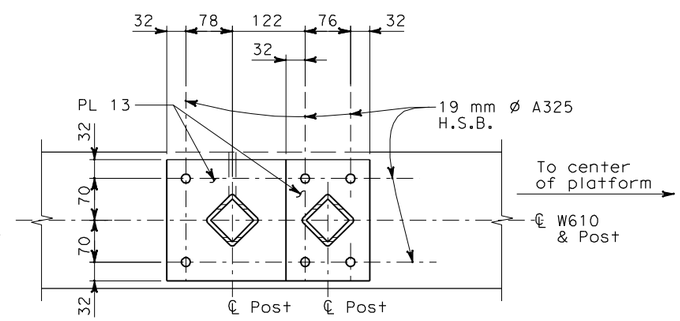

North corner shown, South corner similar, reverse

E / - **SECTION**
SCALE: 1:5

NOTES:

1. Locate bolts to maintain AISC assembly clearances from framing members.

ALL DIMENSIONS ARE IN MILLIMETERS UNLESS OTHERWISE SHOWN

Bob Zandipour
DESIGN OVERSIGHT
4-4-04
SIGN OFF DATE

DESIGN DETAIL SHEET (METRIC) (REV. 3/1/98)

	BY	CHECKED
DESIGN	N. King	M.S. Owyang
LAYOUT	E. Llorico	M.S. Owyang
QUANTITIES	M.S. Owyang	R. Parrino

ORIGINAL SCALE IN MILLIMETERS FOR REDUCED PLANS 0 10 20 30 40 50 60 70 80 90 100

PREPARED FOR THE STATE OF CALIFORNIA DEPARTMENT OF TRANSPORTATION

Brady Nadell
PROJECT ENGINEER

CU 04251
EA 0120F1

BRIDGE NO. 34-0006
KILOMETER POST 13.2/13.9

SAS SUPERSTRUCTURE
SERVICE PLATFORM DETAILS
AS-5A

DISREGARD PRINTS BEARING EARLIER REVISION DATES
REVISION DATES (PRELIMINARY STAGE ONLY) SHEET OF

$FREQUEST

DGN FILE => T:\13103\MS\pse\SAS Struc\CCO\SAS CCO55\2010-09-10_Issued for Submittal\04-0120f1_0075S01.dgn
USERNAME => llorico

DATE PLOTTED => 9/15/2010 TIME PLOTTED => 6:08:37 PM