DIST	COUNTY	ROUTE	KILOMETER POST TOTAL PROJECT	SHEET No	TOTAL SHEETS
04	SF	80	13.2/13.9	75R3	1204

REGISTERED CIVIL ENGINEER 12/19/02

12-6-04
PLANS APPROVAL DATE

REGISTERED PROFESSIONAL ENGINEER Mee Shing Owyang No. 24960 Exp. 12/31/08 CIVIL STATE OF CALIFORNIA

The State of California or its officers or agents shall not be responsible for the accuracy or completeness of electronic copies of this plan sheet.

Parsons Brinckerhoff Quade & Douglas, Inc.
303 Second Street, Suite 700N
San Francisco, CA 94107

Caltrans now has a web site! To get to the web site, go to: http://www.dot.ca.gov

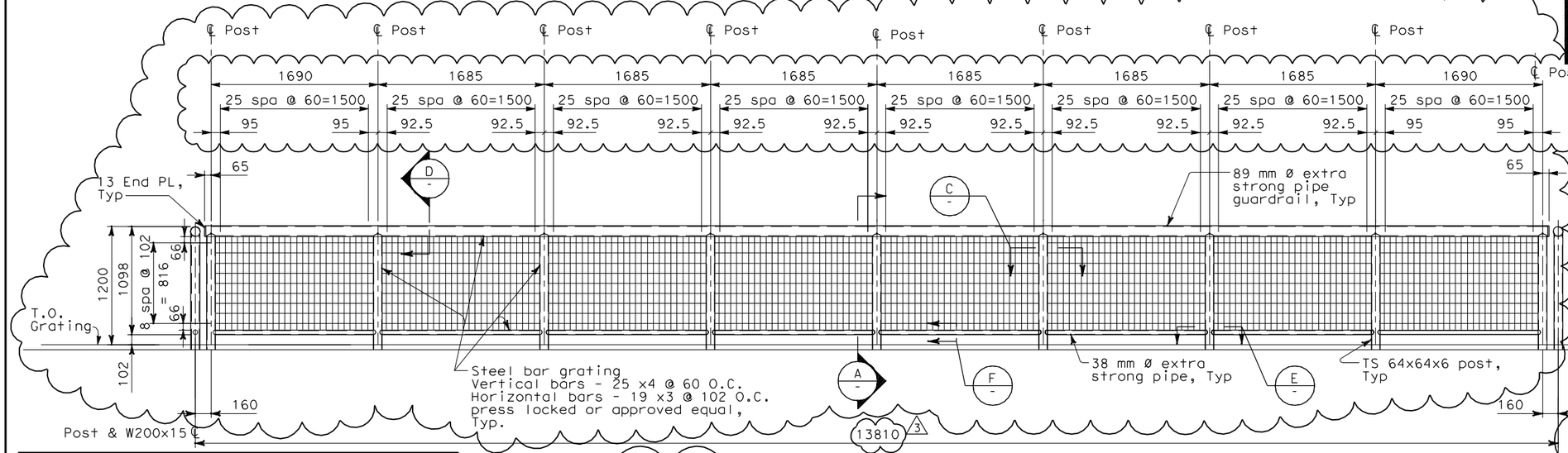

1 ELEVATION
AS-2 SCALE: 1:25

NOTES:

1. The contractor shall verify all controlling field dimensions before ordering or fabricating any material.
2. For structural notes, see sheet AS-1.

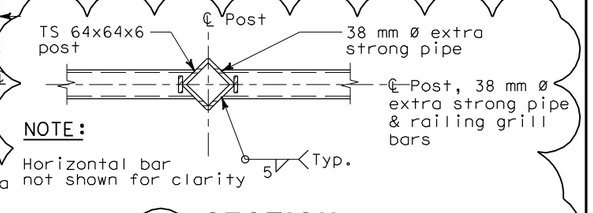

NOTE:
Horizontal bar not shown for clarity

E SECTION
SCALE: 1:5

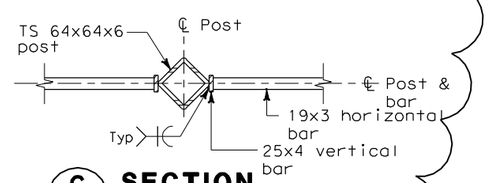

C SECTION
SCALE: 1:5

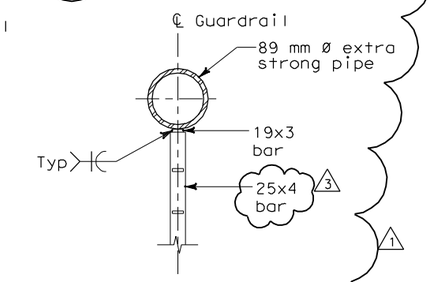

D SECTION
SCALE: 1:5

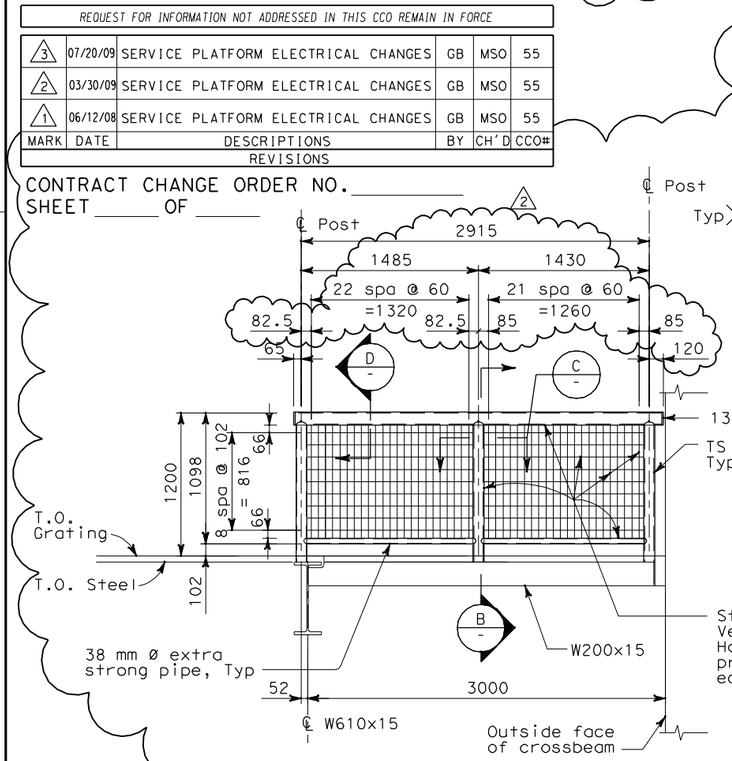

2 ELEVATION
SCALE: 1:25

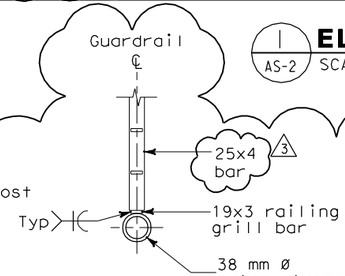

F SECTION
SCALE: 1:5

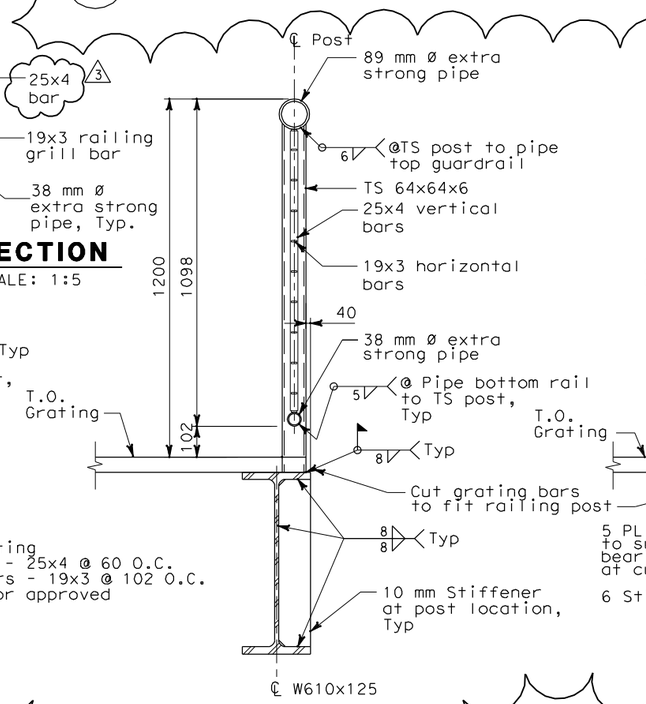

A SECTION
SCALE: 1:10

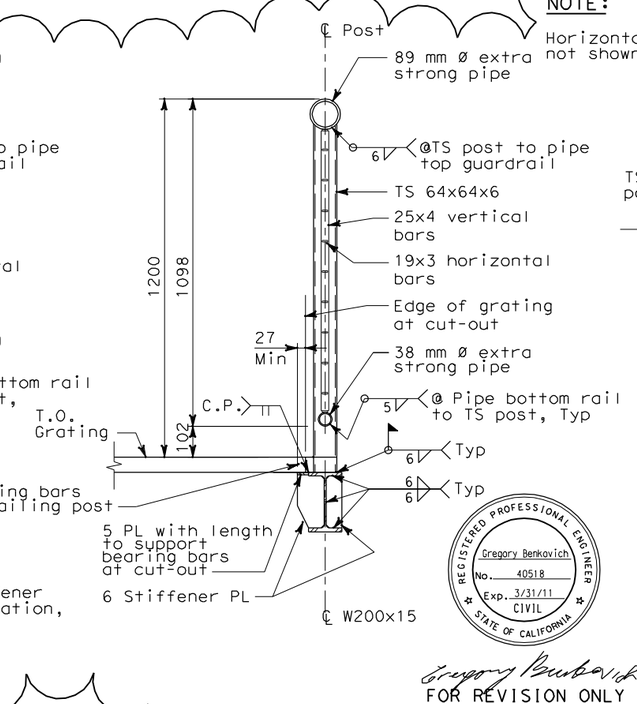

B SECTION
SCALE: 1:10

REGISTERED PROFESSIONAL ENGINEER Gregory Benkovich No. 40518 Exp. 3/31/11 CIVIL STATE OF CALIFORNIA

Gregory Benkovich
FOR REVISION ONLY 1 2 3

MARK	DATE	DESCRIPTIONS	BY	CH'D	CCO#
3	07/20/09	SERVICE PLATFORM ELECTRICAL CHANGES	GB	MSO	55
2	03/30/09	SERVICE PLATFORM ELECTRICAL CHANGES	GB	MSO	55
1	06/12/08	SERVICE PLATFORM ELECTRICAL CHANGES	GB	MSO	55

REVISIONS

REQUEST FOR INFORMATION NOT ADDRESSED IN THIS CCO REMAIN IN FORCE

CONTRACT CHANGE ORDER NO._____
SHEET _____ OF _____

ALL DIMENSIONS ARE IN MILLIMETERS UNLESS OTHERWISE SHOWN

Bob Zandipour
DESIGN OVERSIGHT
4-4-04
SIGN OFF DATE

	BY	CHECKED
DESIGN	A. Van Felten	M.S. Owyang
LAYOUT	A. Van Felten	M.S. Owyang
QUANTITIES	M.S. Owyang	R. Parrino

PREPARED FOR THE STATE OF CALIFORNIA DEPARTMENT OF TRANSPORTATION

Brady Nadell
PROJECT ENGINEER

BRIDGE NO. 34-0006
KILOMETER POST 13.2/13.9

SAS SUPERSTRUCTURE
SERVICE PLATFORM DETAILS
AS-5

DESIGN DETAIL SHEET (METRIC) (REV. 3/1/98)

ORIGINAL SCALE IN MILLIMETERS FOR REDUCED PLANS 0 10 20 30 40 50 60 70 80 90 100

CU 04251
EA 0120F1

DISREGARD PRINTS BEARING EARLIER REVISION DATES

REVISION DATES (PRELIMINARY STAGE ONLY) SHEET OF

DGN FILE => T:\13103\MS\pse\SAS Struc\CCO\SAS CC055\2009-07-20_Issued for Submittal\04-0120f1_0075R03.dgn
USERNAME => llorico

DATE PLOTTED => 7/20/2009 TIME PLOTTED => 4:11:56 PM

$FREQUEST