DIST.	COUNTY	ROUTE	KILOMETER POST TOTAL PROJECT	SHEET NO.	TOTAL SHEETS
04	SF	80	13.2/13.9	660R2	1204

Caltrans Metric

George Baker
REGISTERED ENGINEER - CIVIL
1-27-03
PLANS APPROVAL DATE

REGISTERED PROFESSIONAL ENGINEER George S. Baker No. C 57112 Exp. 12/31/05 CIVIL STATE OF CALIFORNIA

The State of California or its officers or agents shall not be responsible for the accuracy or completeness of electronic copies of this plan sheet.

T.Y. LIN / MOFFATT & NICHOL
825 BATTERY STREET
SAN FRANCISCO, CA 94111

Caltrans now has a web site! To get to the web site, go to: http://www.dot.ca.gov

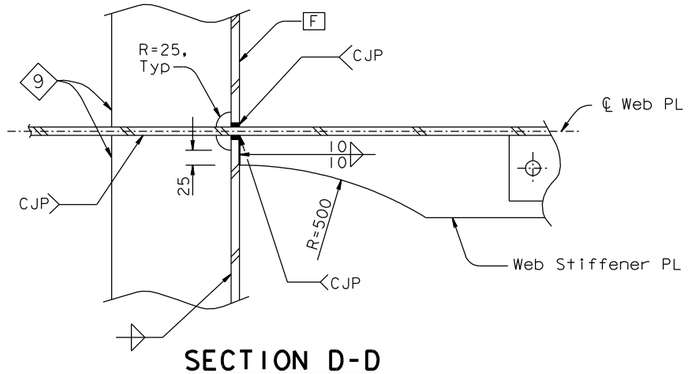

SECTION D-D
1:5

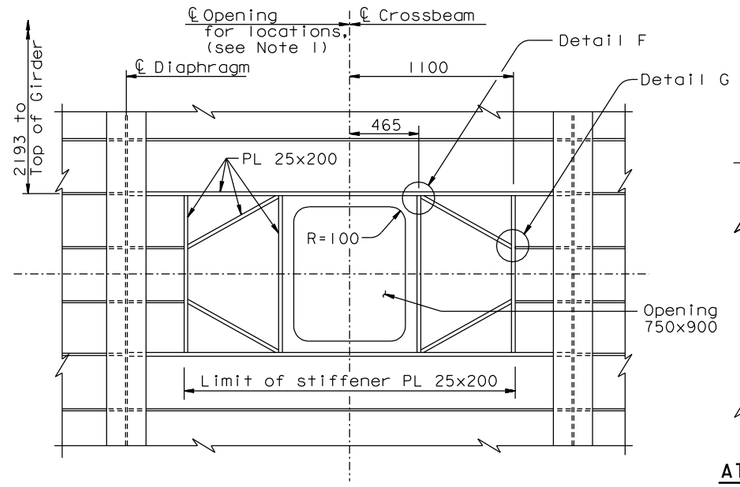

EXTERIOR WEB PLATES

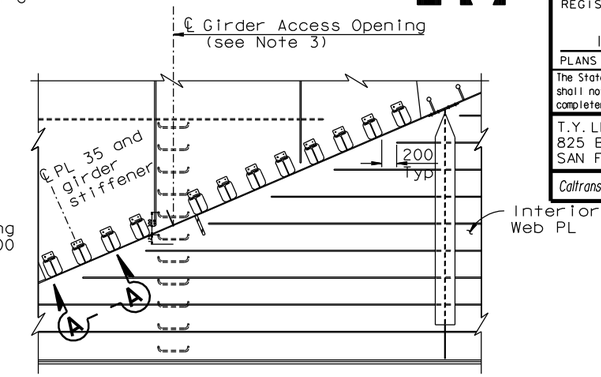

AT INTERIOR WEB PLATE ONLY (see Note 3)

DETAIL D
1:20

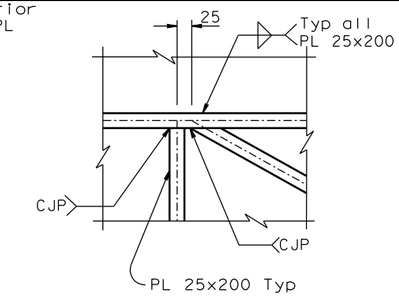

DETAIL F
1:5

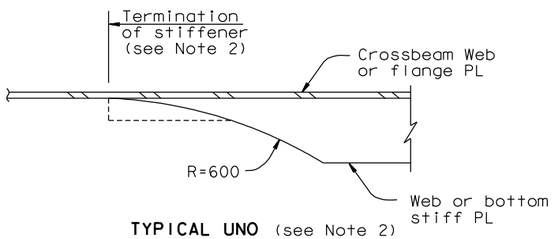

TYPICAL UNO (see Note 2)

STIFFENER TERMINATION DETAIL
1:10

Daniel J. Turner
REGISTERED PROFESSIONAL ENGINEER Daniel J. Turner No. C 65033 Exp. 06/30/09 CIVIL STATE OF CALIFORNIA

FOR REVISIONS ONLY

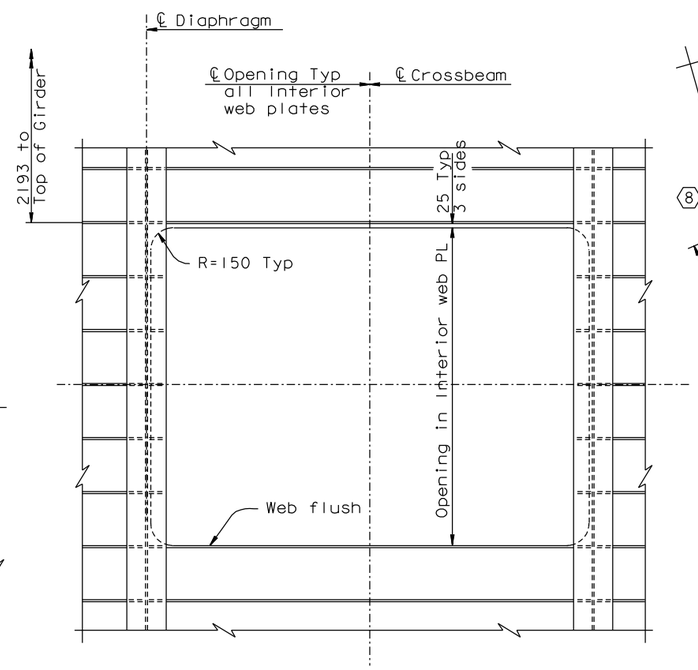

INTERIOR WEB PLATES

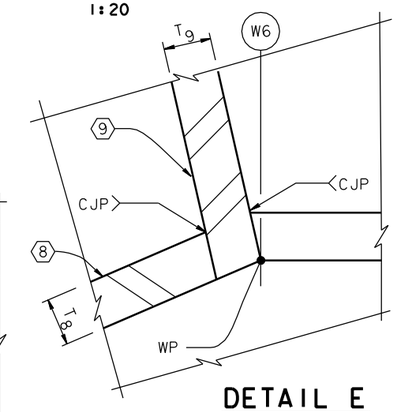

DETAIL E
1:1

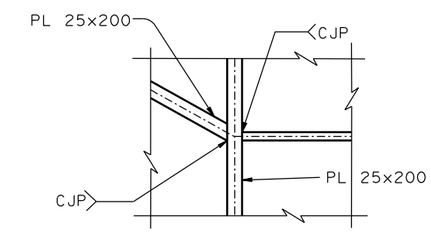

DETAIL G
1:5

REQUESTS FOR INFORMATION NOT ADDRESSED IN THIS CCO REMAIN IN FORCE					
2	06/13/08	SERVICE PLATFORM ELECTRICAL CHANGES	DT	GB	55
1	04/02/07	CROSSBEAM KINK	GB	DT	38
MARK	DATE	DESCRIPTIONS	BY	CH'D	CCO#
REVISIONS					

CONTRACT CHANGE ORDER NO. ____
SHEET ___ OF ___

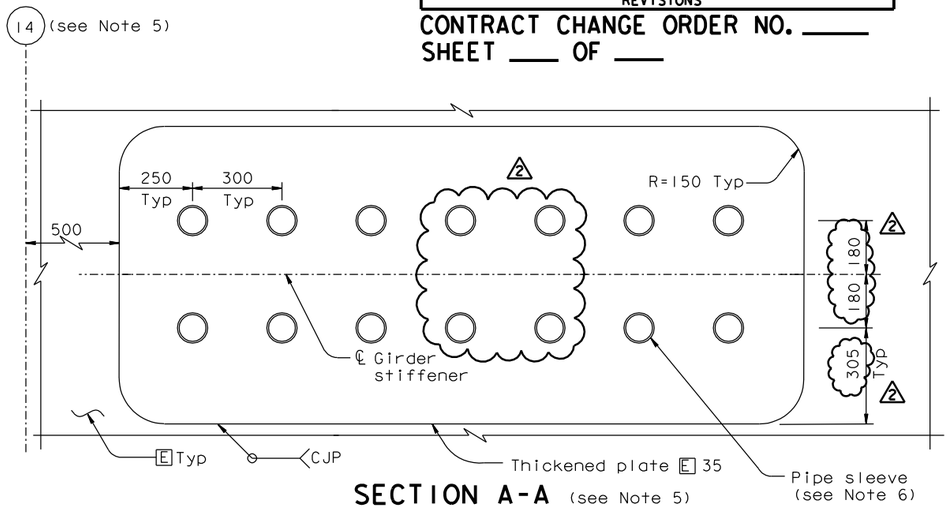

SECTION A-A (see Note 5)
1:10

ACCESS OPENING IN CROSSBEAM WEB PLATES

DETAIL C
1:20

NOTES:

1. For location of crossbeam access openings in exterior crossbeam web plates, see "Girder Access Details No. 1" sheet.
2. For Stiffener termination details not shown, see "Typical Girder Details No. 16" sheet.
3. For girder details at girder access opening, see "Typical Girder Details No. 15" sheet.
4. For details not shown, see "Access Opening With Door At Vertical Face Of Tower Strut Facade" and "Access Opening Door Detail" on "Tower Access Details No. 4" sheet.
5. At utility platform locations, panel points 14, 32, 50, 80, and 110, plate E shall be thickened as shown. The thickened plate shall be flush on the inside of the OBG. (2)
6. For pipe sleeve details, see "Utility Details No. 1" sheet.

ALL DIMENSIONS ARE IN MILLIMETERS UNLESS OTHERWISE SHOWN

R. Valizadeh/V. Toan/Y.L./W.L./F.C.
DESIGN OVERSIGHT
SIGN OFF DATE 06/13/08

	BY	CHECKED
DESIGN	G. Baker	P. Ritchie
DETAILS	D. Veytsman	T. McMeans
QUANTITIES	G. Baker	M. Roberts

PREPARED FOR THE STATE OF CALIFORNIA DEPARTMENT OF TRANSPORTATION

R. Manzanarez
PROJECT ENGINEER

BRIDGE NO. 34-0006L/R
KILOMETER POST 13.2/13.9

SAN FRANCISCO OAKLAND BAY BRIDGE
EAST SPAN SEISMIC SAFETY PROJECT
SELF-ANCHORED SUSPENSION BRIDGE
(SUPERSTRUCTURE & TOWER)

TYPICAL CROSSBEAM DETAILS NO. 6

Rev. Date: 5-18-98

ORIGINAL SCALE IN MILLIMETERS FOR REDUCED PLANS 0 10 20 30 40 50 60 70 80 90 100

CU 04
EA 0120F1

DISREGARD PRINTS BEARING EARLIER REVISION DATES

REVISION DATES (PRELIMINARY STAGE ONLY): 08/07/99 05/31/01 04/08/02 07/01/02 12/19/02 11/13/05

SHEET 243R2 OF

FILE => L:\BB\04-012001\SAS\Contract Plans and CCO\CCO\In Progress\CCO#55\Original 06-13-08\DGN\agcrs08.dgn

100% PS&E

USERNAME => vignatovsky DATE PLOTTED => 13 JUN 2008 TIME PLOTTED => 13:17:37