DIST	COUNTY	ROUTE	KILOMETER POST TOTAL PROJECT	SHEET No	TOTAL SHEETS
04	SF	80	13.2/13.9	83S3 R2	1204

Caltrans Metric

REGISTERED CIVIL ENGINEER

PLANS APPROVAL DATE

REGISTERED PROFESSIONAL ENGINEER Gregory Benkovich No. 40518 Exp. 3/31/11 CIVIL STATE OF CALIFORNIA

The State of California or its officers or agents shall not be responsible for the accuracy or completeness of electronic copies of this plan sheet.

PB AMERICAS, Inc.
303 Second Street, Suite 700N
San Francisco, CA 94107

Caltrans now has a web site! To get to the web site, go to: http://www.dot.ca.gov

REGISTERED PROFESSIONAL ENGINEER Mee Shing Owyang No. 24960 Exp. 12/31/11 CIVIL STATE OF CALIFORNIA

FOR REVISION ONLY 2

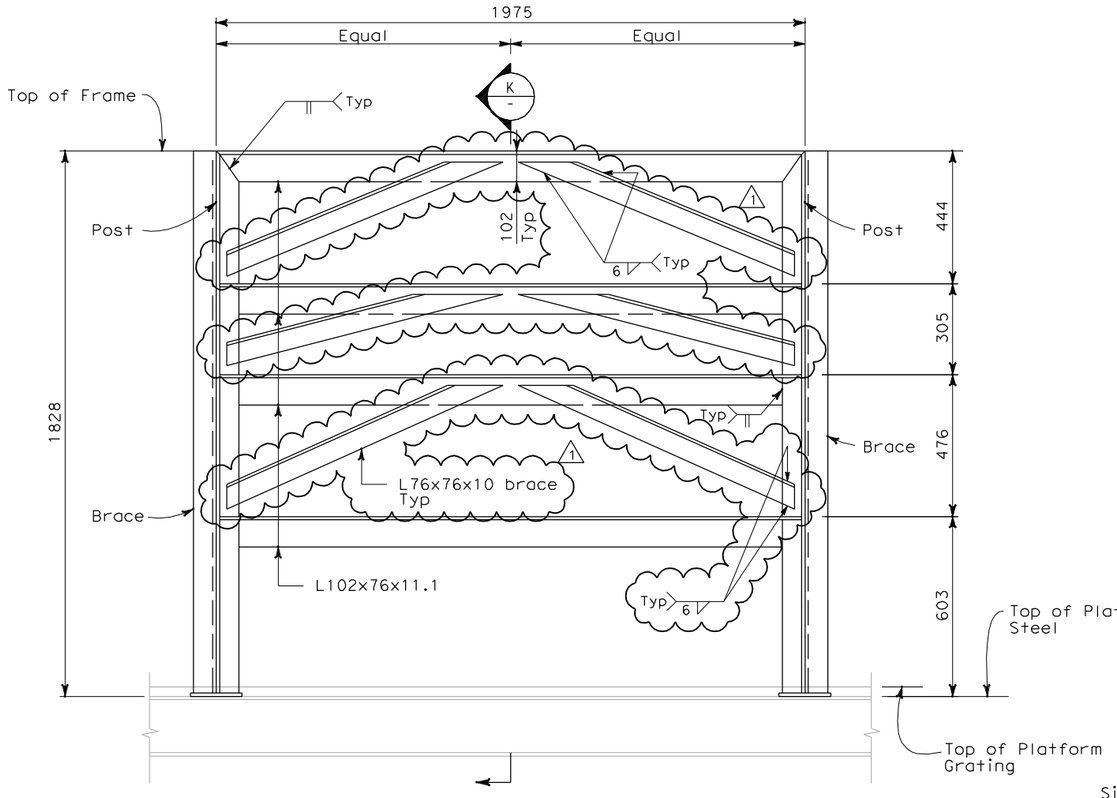

RACK #3 (TRANSFORMER & CIRCUIT BREAKER)

H AS-13 **SECTION** NOT TO SCALE

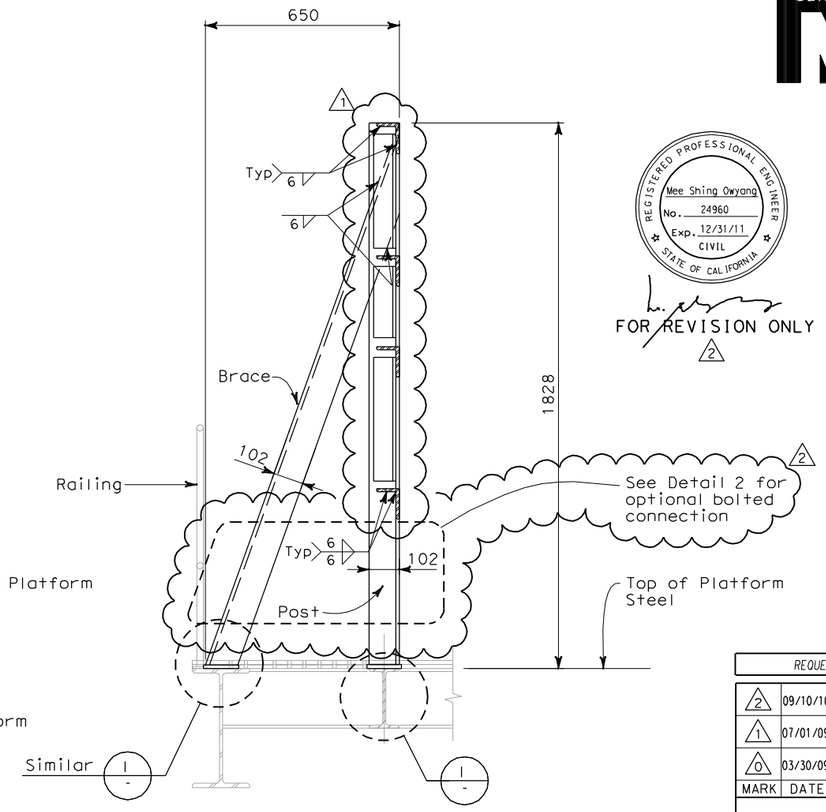

K AS-13 **SECTION** NOT TO SCALE

NOTES:

1. The contractor shall verify all controlling field dimensions before ordering or fabricating any material.
2. For structural notes, see sheet AS-1.
3. Unless otherwise noted, all framing elements are L102x76x13.
4. Contractor has the option to perform welds shown on this drawing in the shop or in the field.

REQUEST FOR INFORMATION NOT ADDRESSED IN THIS CCO REMAIN IN FORCE					
2	09/10/10	SERVICE PLATFORM ELECTRICAL CHANGES	NK	MSO	55
1	07/01/09	SERVICE PLATFORM ELECTRICAL CHANGES	GB	MSO	55
0	03/30/09	SERVICE PLATFORM ELECTRICAL CHANGES	GB	MSO	55
MARK	DATE	DESCRIPTIONS	BY	CH'D	CCO#
		REVISIONS			

CONTRACT CHANGE ORDER NO. _____
SHEET _____ OF _____

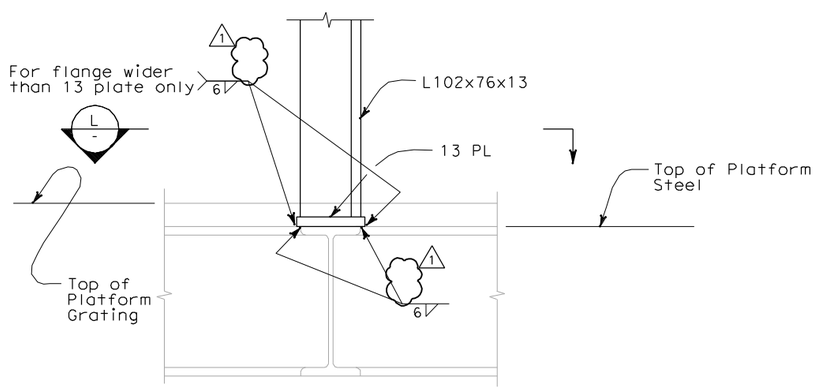

I **DETAIL** NOT TO SCALE

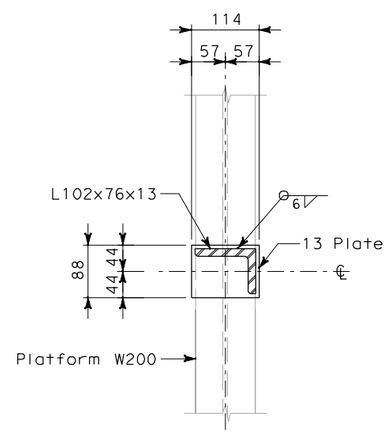

L **SECTION** NOT TO SCALE

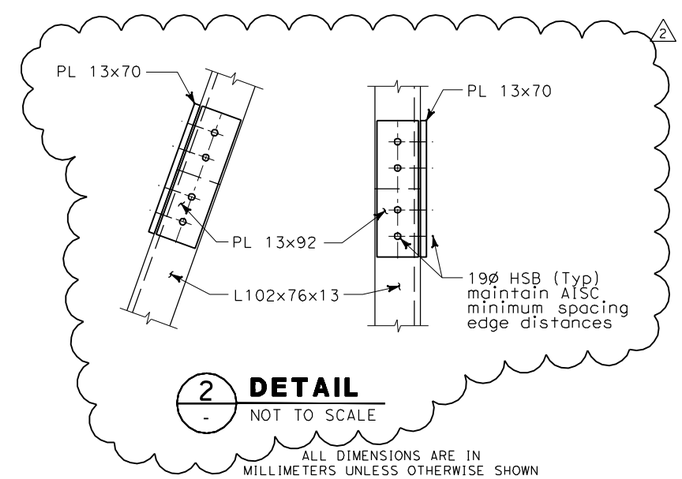

2 **DETAIL** NOT TO SCALE

ALL DIMENSIONS ARE IN MILLIMETERS UNLESS OTHERWISE SHOWN

Bob Zandipour
DESIGN OVERSIGHT

SIGN OFF DATE

	BY	CHECKED
DESIGN	G. Benkovich	M. S. Owyang
DETAILS	L. Reyes	M. S. Owyang
QUANTITIES		

PREPARED FOR THE STATE OF CALIFORNIA DEPARTMENT OF TRANSPORTATION

PROJECT ENGINEER

BRIDGE NO. 34-0006
KILOMETER POST 13.2/13.9

SAS SUPERSTRUCTURE

ELECTRICAL PANEL SUPPORT SECTIONS SHEET 3

AS-13C

DISREGARD PRINTS BEARING EARLIER REVISION DATES

REVISION DATES (PRELIMINARY STAGE ONLY) SHEET OF

DESIGN DETAIL SHEET (METRIC) (REV. 3/1/98)

ORIGINAL SCALE IN MILLIMETERS FOR REDUCED PLANS 0 10 20 30 40 50 60 70 80 90 100

CU 04251
EA 0120F1

FILE => T:\13103\MS\pse\SAS Struc\CCO\SAS CC055\04-0120f1_0083S03R02.dgn

$FREQUEST

USERNAME => llorico DATE PLOTTED => 9/11/2010 TIME PLOTTED => 3:21:43 PM