REQUEST FOR INFORMATION NOT ADDRESSED IN THIS CCO REMAIN IN FORCE					
2	09/10/10	SERVICE PLATFORM ELECTRICAL CHANGES	NK	MSO	55
1	07/01/09	SERVICE PLATFORM ELECTRICAL CHANGES	NK	MSO	55
0	03/30/09	SERVICE PLATFORM ELECTRICAL CHANGES	NK	MSO	55
MARK	DATE	DESCRIPTIONS	BY	CH'D	CCO#
REVISIONS					

CONTRACT CHANGE ORDER NO. _____
SHEET _____ OF _____

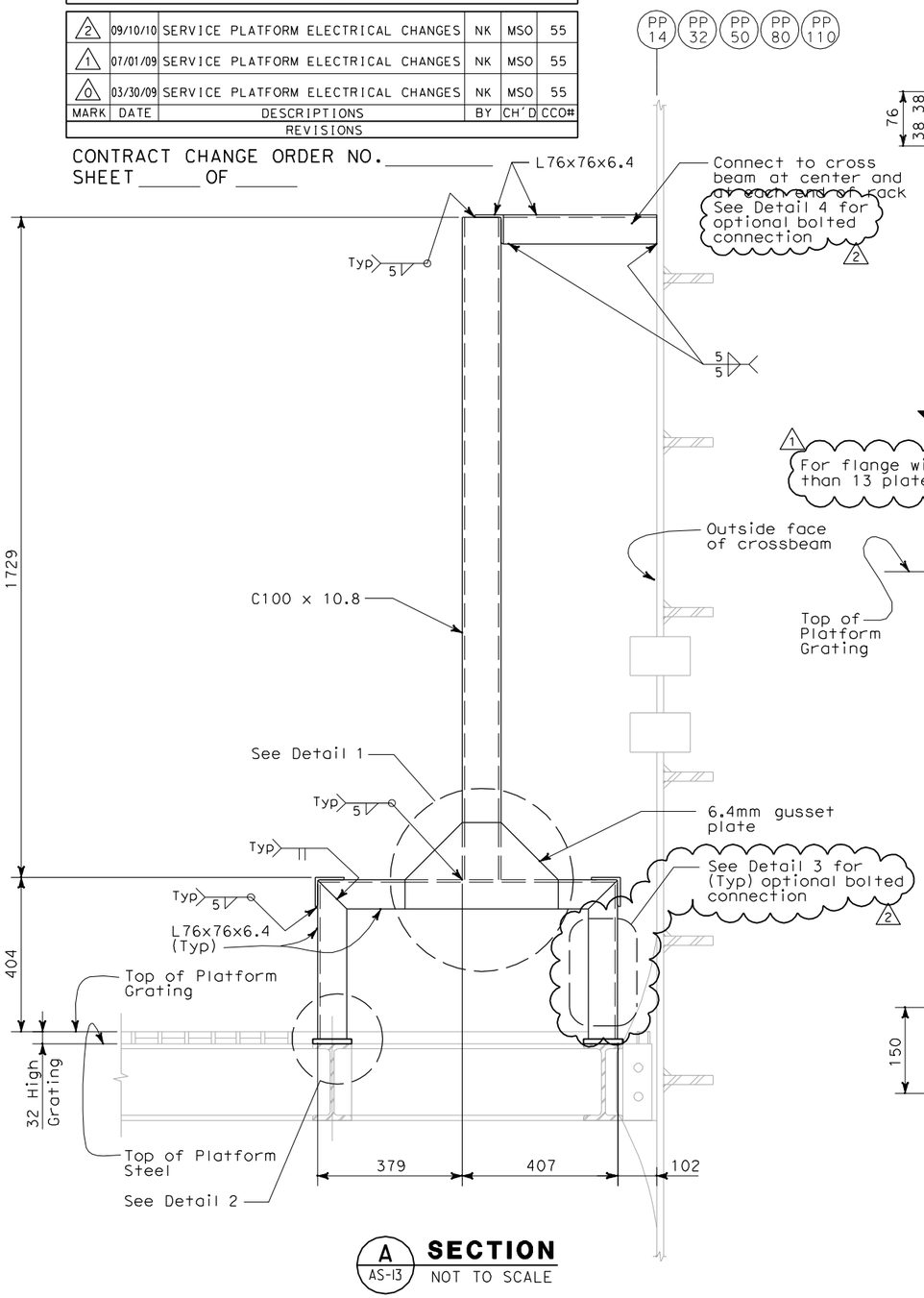

A / AS-13 SECTION
NOT TO SCALE

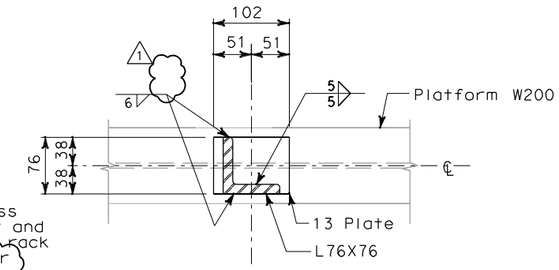

B / - SECTION
NOT TO SCALE

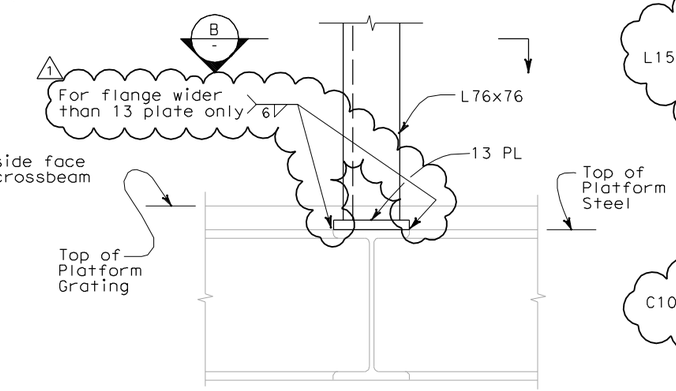

2 / - DETAIL
NOT TO SCALE

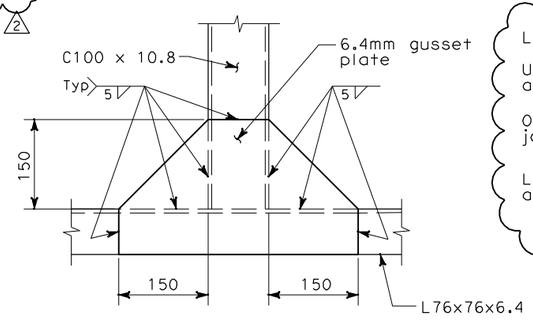

1 / - DETAIL
NOT TO SCALE

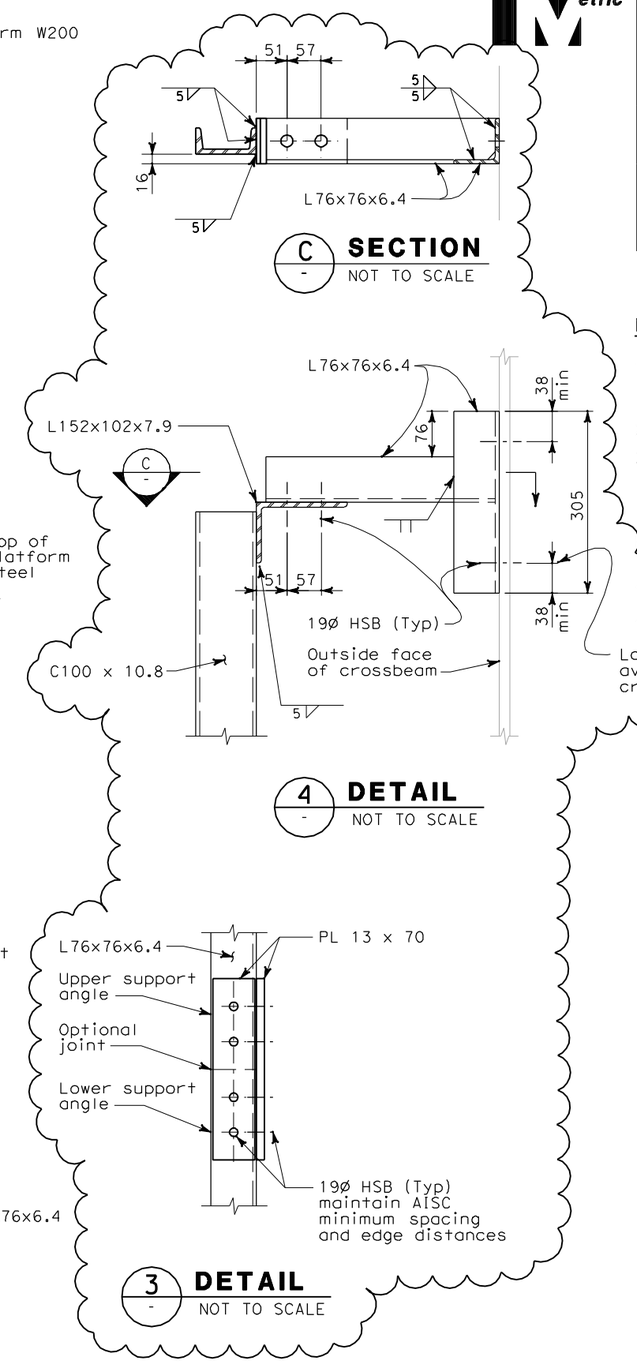

C / - SECTION
NOT TO SCALE

4 / - DETAIL
NOT TO SCALE

3 / - DETAIL
NOT TO SCALE

DIST	COUNTY	ROUTE	KILOMETER POST TOTAL PROJECT	SHEET No	TOTAL SHEETS
04	SF	80	13.2/13.9	83S1 R2	1204

REGISTERED CIVIL ENGINEER 3/30/09

PLANS APPROVAL DATE

REGISTERED PROFESSIONAL ENGINEER Mee Shing Owyang No. 24960 Exp. 12/31/09 CIVIL STATE OF CALIFORNIA

The State of California or its officers or agents shall not be responsible for the accuracy or completeness of electronic copies of this plan sheet.

PB AMERICAS, Inc.
303 Second Street, Suite 700N
San Francisco, CA 94107

Caltrans now has a web site! To get to the web site, go to: http://www.dot.ca.gov

NOTES:

1. The contractor shall verify all controlling field dimensions before ordering or fabricating any material.
2. For structural notes, see sheet AS-1.
3. Contractor has the option to perform welds shown on this drawing in the shop or the field.

REGISTERED PROFESSIONAL ENGINEER Mee Shing Owyang No. 24960 Exp. 12/31/11 CIVIL STATE OF CALIFORNIA

FOR REVISION ONLY
2

ALL DIMENSIONS ARE IN MILLIMETERS UNLESS OTHERWISE SHOWN

Bob Zandipour
DESIGN OVERSIGHT

SIGN OFF DATE

DESIGN DETAIL SHEET (METRIC) (REV. 3/1/98)

	BY	CHECKED
DESIGN	N. King	M. S. Owyang
DETAILS	L. Reyes	M. S. Owyang
QUANTITIES		

PREPARED FOR THE STATE OF CALIFORNIA DEPARTMENT OF TRANSPORTATION

PROJECT ENGINEER

BRIDGE NO. 34-0006
KILOMETER POST 13.2/13.9

SAS SUPERSTRUCTURE

ELECTRICAL PANEL SUPPORT SECTIONS SHEET 1

AS-13A

ORIGINAL SCALE IN MILLIMETERS FOR REDUCED PLANS 0 10 20 30 40 50 60 70 80 90 100

CU 04251
EA 0120F1

DISREGARD PRINTS BEARING EARLIER REVISION DATES

REVISION DATES (PRELIMINARY STAGE ONLY)

SHEET OF

FILE => T:\13103\MS\pse\SAS Struc\CCO\SAS CCO55\2010-09-10_Issued for Submittal\04-0120f1_0083S01R02.dgn

USERNAME => llorico DATE PLOTTED => 9/13/2010 TIME PLOTTED => 8:43:44 AM

$FREQUEST