DIST	COUNTY	ROUTE	KILOMETER POST TOTAL PROJECT	SHEET No	TOTAL SHEETS
04	SF	80	13.2/13.9	72R7	1204

REGISTERED STRUCTURAL ENGINEER — DATE 12/19/02

12-6-04
PLANS APPROVAL DATE

REGISTERED PROFESSIONAL ENGINEER — Mee Shing Owyang — No. 24960 — Exp. 12/31/07 — CIVIL — STATE OF CALIFORNIA

PARSONS BRINCKERHOFF QUADE & DOUGLAS, INC.
303 SECOND STREET, SUITE 700 N
SAN FRANCISCO, CA 94107

The State of California or its officers or agents shall not be responsible for the accuracy or completeness of electronic copies of this plan sheet.

Caltrans now has a web site! To get to the web site, go to http://www.dot.ca.gov

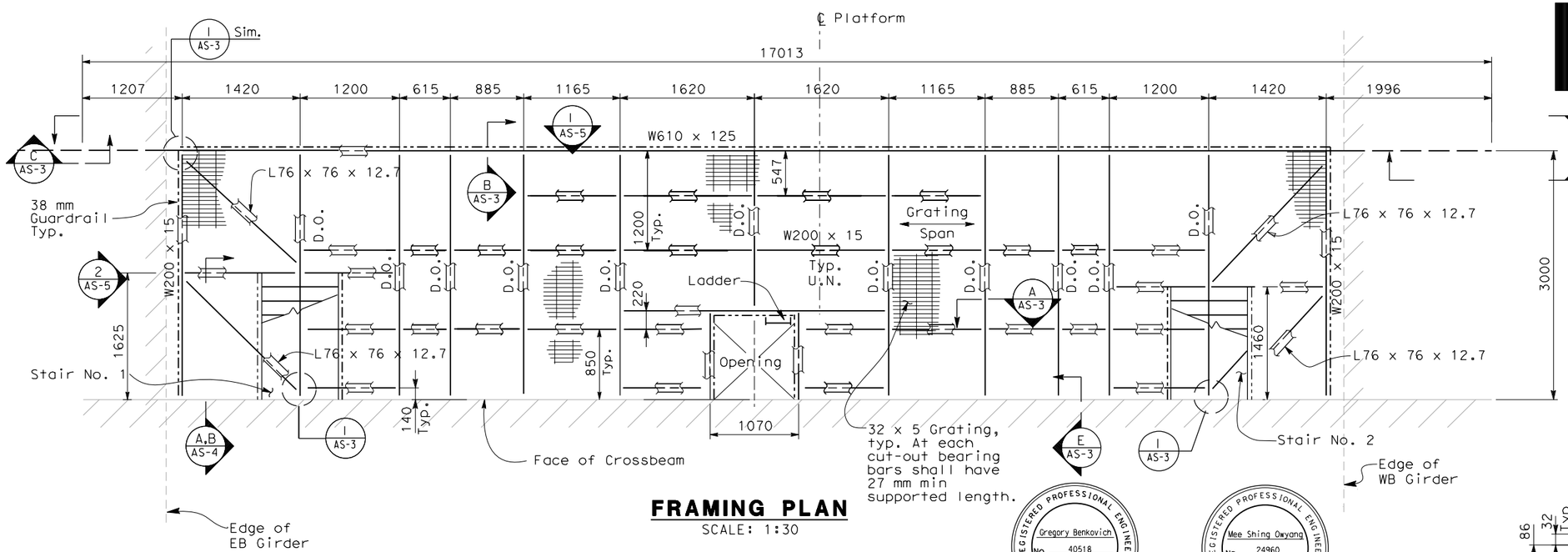

FRAMING PLAN
SCALE: 1:30

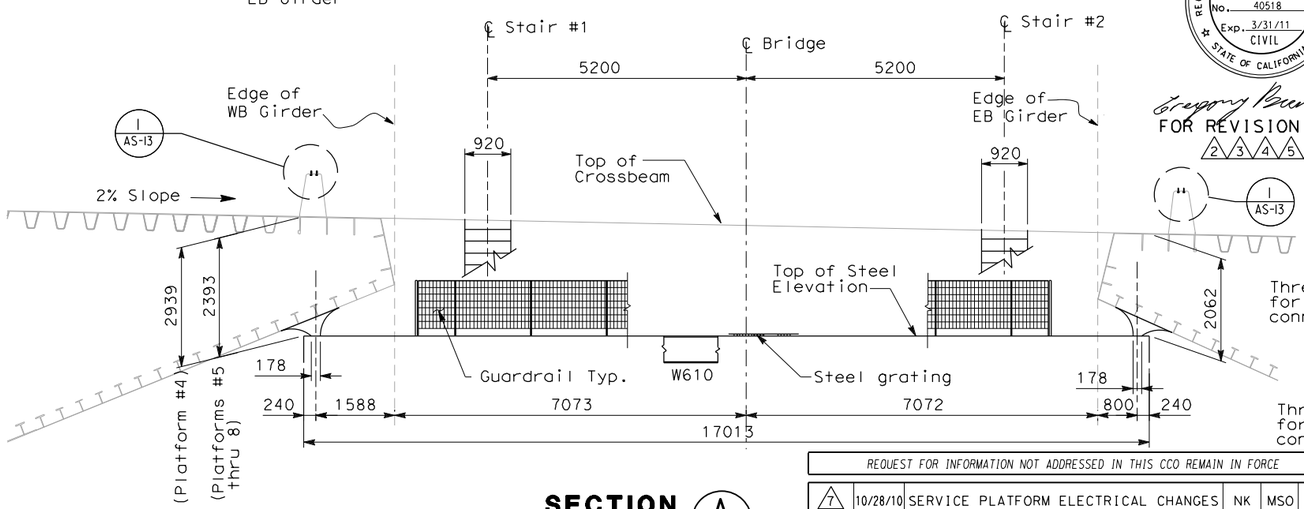

SECTION A
SCALE: 1:60

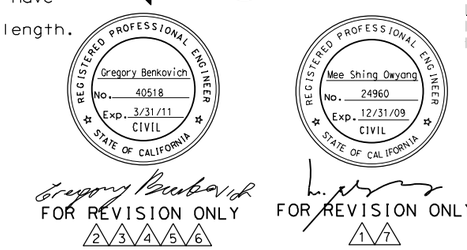

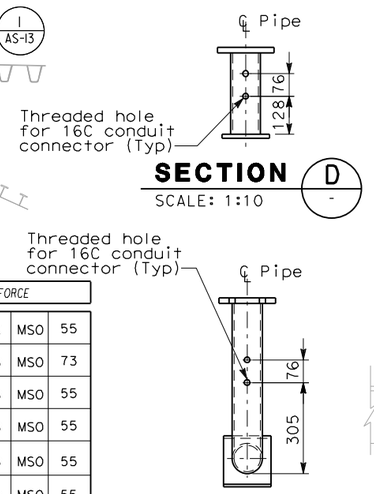

SECTION D
SCALE: 1:10

SECTION E
SCALE: 1:10

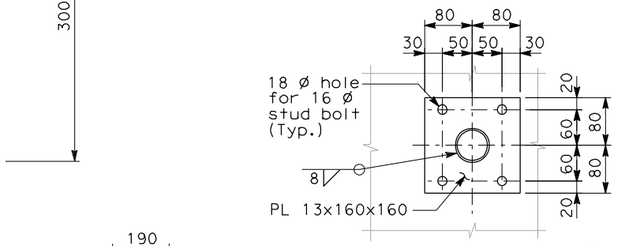

SECTION C
SCALE: 1:5

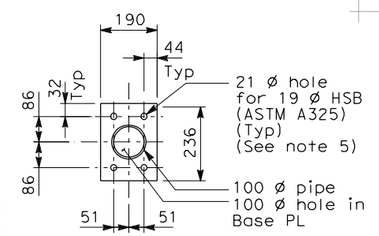

SECTION B
SCALE: 1:10

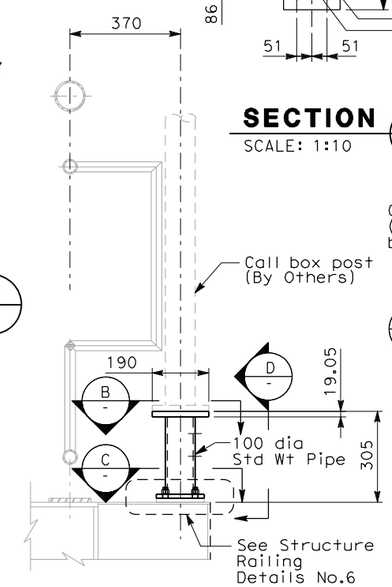

AT BELVEDERE

DETAIL 2
SCALE: 1:10
NOTE 5

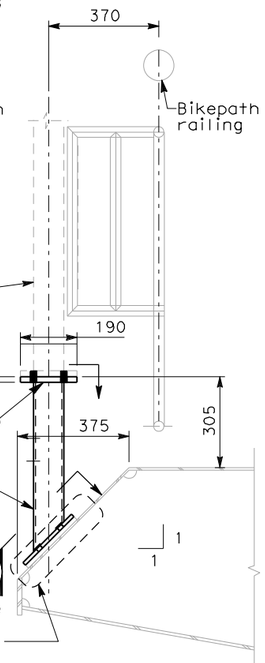

AT BIKE PATH

DETAIL 1
SCALE: 1:10
NOTE 5

ALL DIMENSIONS ARE IN MILLIMETERS UNLESS OTHERWISE SHOWN

NOTES:

1. Total weight of platform 5987 kg
2. The Contractor shall verify all controlling field dimensions before ordering or fabricating any materials.
3. For platform locations, see electrical plans.
4. For anchor bolt locations, spacing and other requirements, see electrical plan.
5. For Call Box locations, see electrical plan sheet E-397. Bolt hole size and spacings shown are for information only contractor to verify the actual bolt hole size and spacings.
6. Per Caltrans request, framing members of W6x125, W200x15, and L76x76x12.7 shown on this page are no longer needed to be galvanized. (7)

REQUEST FOR INFORMATION NOT ADDRESSED IN THIS CCO REMAIN IN FORCE

MARK	DATE	DESCRIPTIONS	BY	CH'D	CCO#
7	10/28/10	SERVICE PLATFORM ELECTRICAL CHANGES	NK	MSO	55
6	06/11/10	BIKE PATH CONDUIT	GB	MSO	73
5	07/17/09	SERVICE PLATFORM ELECTRICAL CHANGES	GB	MSO	55
4	03/30/09	SERVICE PLATFORM ELECTRICAL CHANGES	GB	MSO	55
3	01/07/09	SERVICE PLATFORM ELECTRICAL CHANGES	GB	MSO	55
2	06/12/08	SERVICE PLATFORM ELECTRICAL CHANGES	GB	MSO	55
1	03/04/08	BARRIER MODIFICATIONS.	EL	MI	44

REVISIONS

CONTRACT CHANGE ORDER NO._____
SHEET _____ OF _____

Bob Zandipour
DESIGN OVERSIGHT
4-4-04
SIGN OFF DATE

	BY	CHECKED
DESIGN	A. Van Felten	M. S. Owyang
DETAILS	A. Van Felten	M. S. Owyang
QUANTITIES	M.S. Owyang	R. Parrino

PREPARED FOR THE STATE OF CALIFORNIA DEPARTMENT OF TRANSPORTATION

Gene Lusherovich
PROJECT ENGINEER

BRIDGE NO. 34-0006
KILOMETER POST 13.2/13.9

SAS SUPERSTRUCTURE
SERVICE PLATFORM FRAMING PLAN
AS-2

CU 04251
EA 0120F1

DISREGARD PRINTS BEARING EARLIER REVISION DATES

REVISION DATES (PRELIMINARY STAGE ONLY) — SHEET — OF

DESIGN DETAIL SHEET (METRIC) (REV. 3/1/98)

ORIGINAL SCALE IN MILLIMETERS FOR REDUCED PLANS 0 10 20 30 40 50 60 70 80 90 100

FILE => T:\13103\MS\pse\SAS Struc\CCO\SAS CCO55\04-0120f1_0072R07.dgn

USERNAME => llorico DATE PLOTTED => 10/28/2010 TIME PLOTTED => 2:48:10 PM

$FREQUEST