DIST.	COUNTY	ROUTE	KILOMETER POST TOTAL PROJECT	SHEET NO.	TOTAL SHEETS
04	SF	80	13.2/13.9	646R2	1204

Caltrans Metric

George Baker
REGISTERED ENGINEER - CIVIL
12-6-04
PLANS APPROVAL DATE

REGISTERED PROFESSIONAL ENGINEER George S. Baker No. C57112 Exp. 12/31/05 CIVIL STATE OF CALIFORNIA

The State of California or its officers or agents shall not be responsible for the accuracy or completeness of electronic copies of this plan sheet.

T.Y. LIN / MOFFATT & NICHOL
825 BATTERY STREET
SAN FRANCISCO, CA 94111

Caltrans now has a web site! To get to the web site, go to: http://www.dot.ca.gov

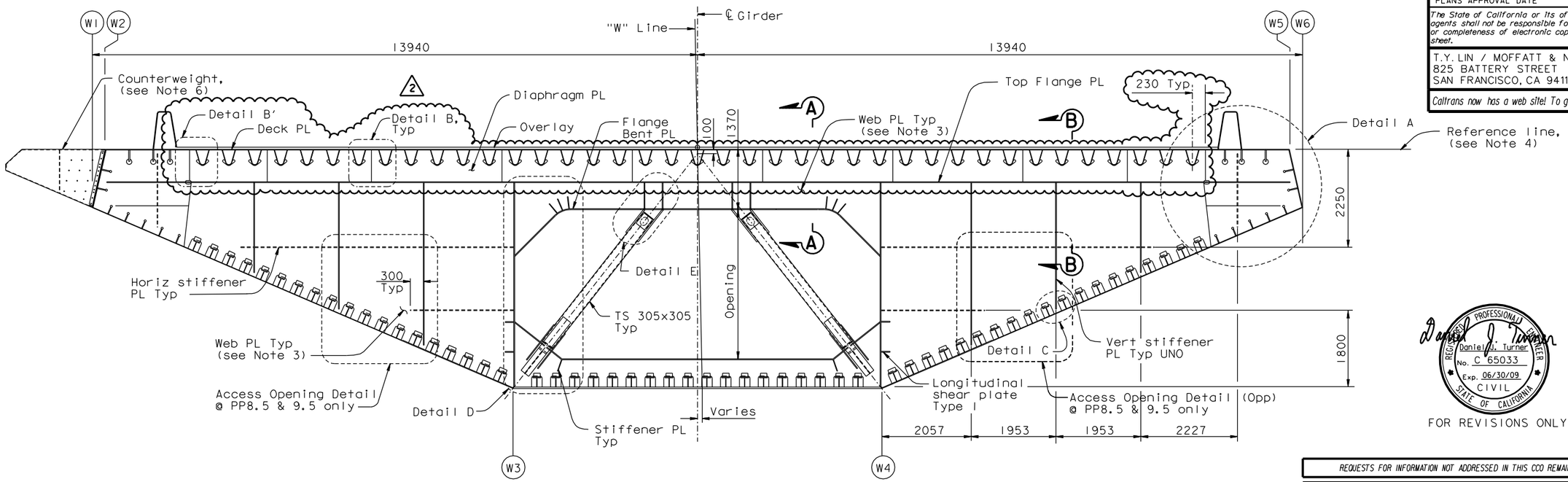

"W" LINE

TYPICAL FLOORBEAM SECTION (See Note 1)

1:50

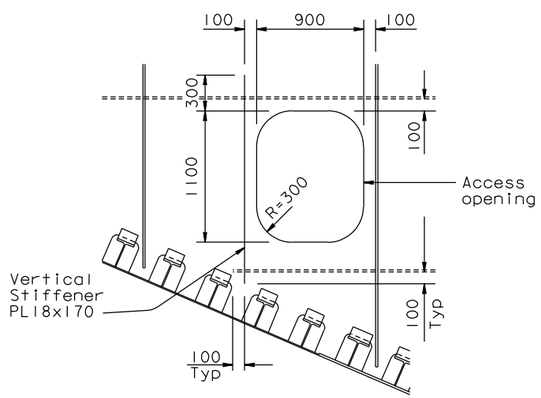

ACCESS OPENING DETAIL

(PP9.5 shown, PP8.5 similar)

NOTES:

1. Typical floorbeam is located at Panel Points 9 through 115 and intermediate Panel Points 8.5 to 9.5.
2. For floorbeam at intermediate Panel Points 10.5, 11.5, 12.5, 13.5, 111.5, 112.5, 113.5, 114.5, 115.2 and 115.5, see "Typical Floorbeam Details No.8" sheet.
3. For extents and thickness of floorbeam web, see "Typical Floorbeam Details No.2" sheet.
4. All dimensions are taken with respect to a reference line tangent to top deck plate.
5. For Sections A-A and B-B and Details B, B' and C, see "Typical Floorbeam Details No.4" sheet.
6. For counterweight details, see "Typical Girder Details No.17" sheet.
7. For "Typical Floorbeam Details" sheets all bolts shall be detailed according to the bolt dimension table. See "Typical Girder Details No.1" sheet. All bolts are HS, unless noted otherwise.
8. For "Typical Floorbeam Details" sheets unless noted otherwise all fillet welds shall be 6 mm for plate sizes not greater than 20 mm. For plates greater than 20 mm fillet welds shall be 8 mm unless noted otherwise.
9. For Detail A, see "Typical Floorbeam Details No.3" sheet.
10. For Details D and E, see "Typical Floorbeam Details No.5" sheet.

Daniel J. Turner
REGISTERED PROFESSIONAL ENGINEER Daniel J. Turner No. C 65033 Exp. 06/30/09 CIVIL STATE OF CALIFORNIA

FOR REVISIONS ONLY

REQUESTS FOR INFORMATION NOT ADDRESSED IN THIS CCO REMAIN IN FORCE

MARK	DATE	DESCRIPTIONS	BY	CH'D	CCO#
2	01/22/08	GRINDING OBG DECK PLATES	AS	DT	53
1	02/16/07	BULKHEAD AT GIRDER PIER W2	AS	DT	27

REVISIONS

CONTRACT CHANGE ORDER NO. ____
SHEET ____ OF ____

ALL DIMENSIONS ARE IN MILLIMETERS UNLESS OTHERWISE SHOWN

SAN FRANCISCO OAKLAND BAY BRIDGE
EAST SPAN SEISMIC SAFETY PROJECT
SELF-ANCHORED SUSPENSION BRIDGE
(SUPERSTRUCTURE & TOWER)

TYPICAL FLOORBEAM DETAILS NO. 1

R. Valizadeh/V. Toan/Y.L./W.L./F.C.
DESIGN OVERSIGHT
Roya Valizadeh / Vong Toan / Y. Liu
SIGN OFF DATE 01/22/08

Rev. Date: 5-18-98

	BY	CHECKED
DESIGN	G. Baker	P. Ritchie
DETAILS	S. Camo	T. McMeans
QUANTITIES	C. Mauch	M. Roberts

PREPARED FOR THE STATE OF CALIFORNIA DEPARTMENT OF TRANSPORTATION

R. Manzanarez
PROJECT ENGINEER

BRIDGE NO. 34-0006L/R
KILOMETER POST 13.2/13.9

ORIGINAL SCALE IN MILLIMETERS FOR REDUCED PLANS 0 10 20 30 40 50 60 70 80 90 100

CU 04
EA 0120F1

DISREGARD PRINTS BEARING EARLIER REVISION DATES → 01/15/99 05/15/99 08/02/99 05/31/01 04/08/02 07/01/02 12/19/02

SHEET 229R2 OF

FILE => I:\bb\04-0120F1\sas\contract plans and cco\cco\in progress\cco#53\update 03-18-08\dgn\agftb01.dgn

100% PS&E

DATE PLOTTED => 18 APR 2008 TIME PLOTTED => 09:25:48

USERNAME => ptom