DIST.	COUNTY	ROUTE	KILOMETER POST TOTAL PROJECT	SHEET NO.	TOTAL SHEETS
04	SF	80	13.2/13.9	649R2	1204

Caltrans Metric

George Baker
REGISTERED ENGINEER - CIVIL
12-6-04
PLANS APPROVAL DATE

REGISTERED PROFESSIONAL ENGINEER George S. Baker No. C57112 Exp. 12/31/05 CIVIL STATE OF CALIFORNIA

The State of California or its officers or agents shall not be responsible for the accuracy or completeness of electronic copies of this plan sheet.

T.Y. LIN / MOFFATT & NICHOL
825 BATTERY STREET
SAN FRANCISCO, CA 94111

Caltrans now has a web site! To get to the web site, go to: http://www.dot.ca.gov

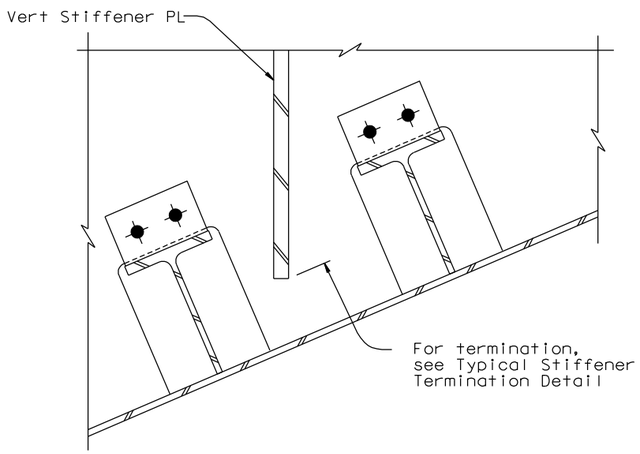

DETAIL C
1:5

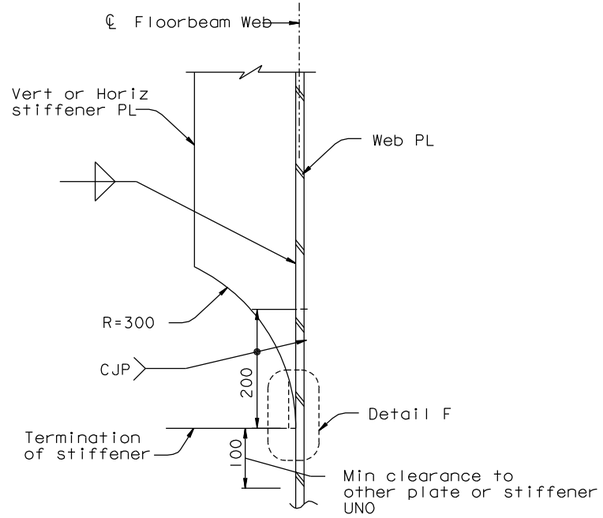

TYPICAL STIFFENER TERMINATION DETAIL
1:5
FOR SPCM PLATES

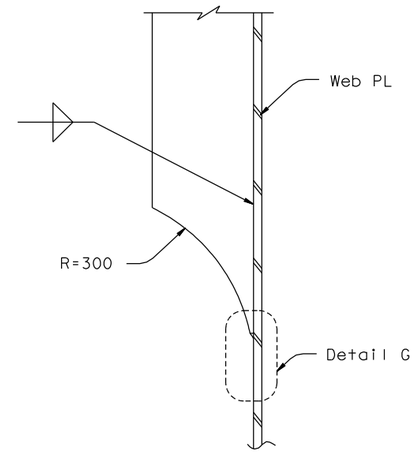

TYPICAL STIFFENER TRANSITION DETAIL
1:5
FOR NON-SPCM PLATES

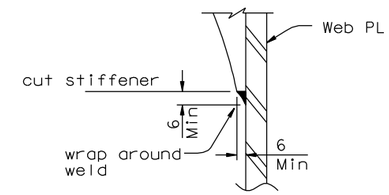

DETAIL G
1:2

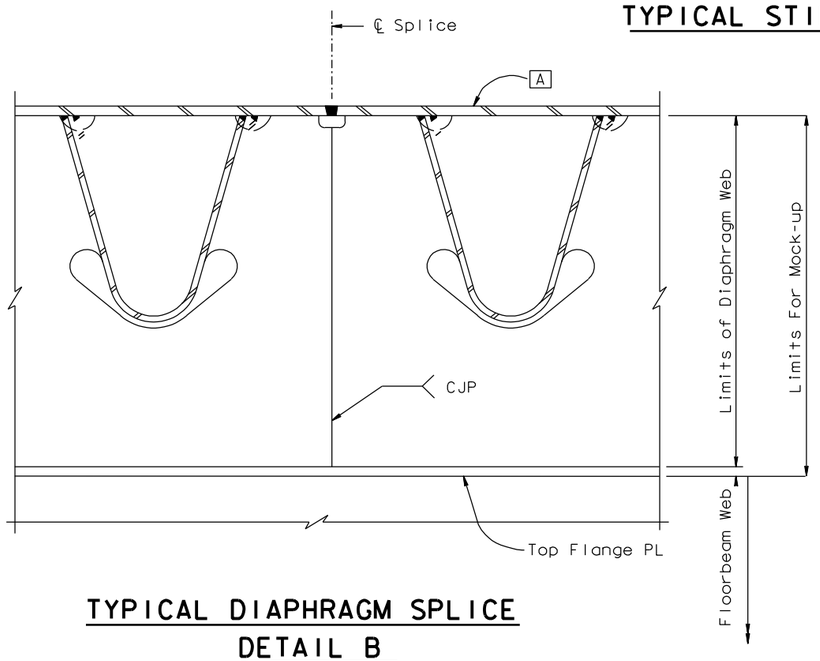

TYPICAL DIAPHRAGM SPLICE
DETAIL B
1:5

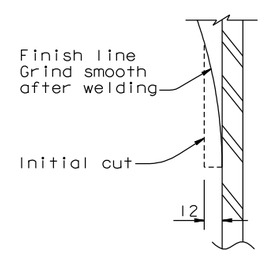

DETAIL F
1:2

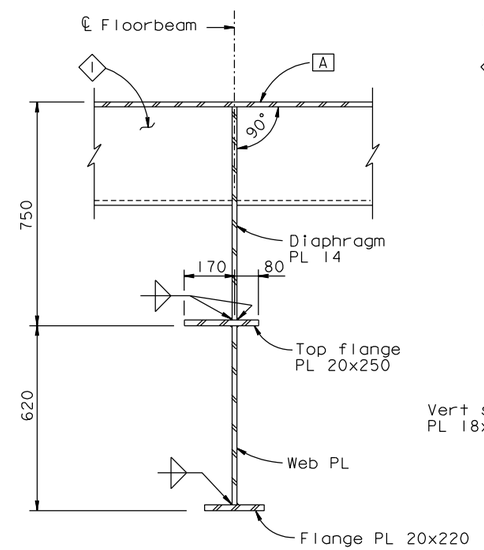

SECTION A-A
1:10

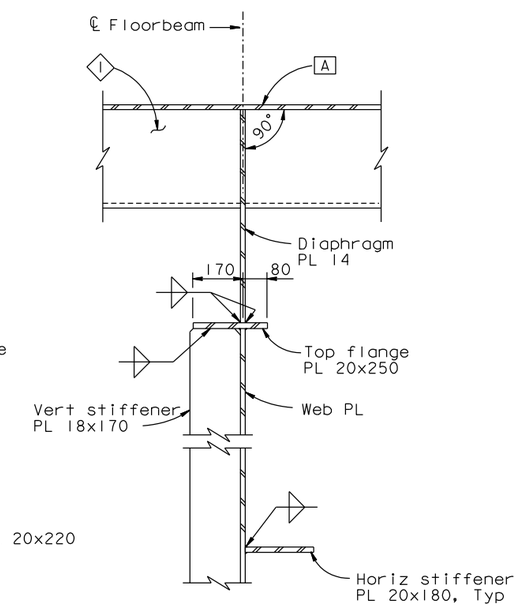

SECTION B-B
1:10

Daniel J. Turner
REGISTERED PROFESSIONAL ENGINEER Daniel J. Turner No. C 65033 Exp. 06/30/09 CIVIL STATE OF CALIFORNIA

FOR REVISIONS ONLY

2 REVISION 2 RESCINDS REVISION 1

CONTRACT CHANGE ORDER NO. ____
SHEET ___ OF ___

REQUESTS FOR INFORMATION NOT ADDRESSED IN THIS CCO REMAIN IN FORCE

ALL DIMENSIONS ARE IN MILLIMETERS UNLESS OTHERWISE SHOWN

R. Valizadeh/V. Toan/Y.L./W.L./F.C.
DESIGN OVERSIGHT
Roya Valizadeh / Vong Toan / Y. Liu
SIGN OFF DATE 04/08/09

MARK	DATE	DESCRIPTIONS	BY	CH'D	CCO#
2	04/08/09	GRINDING OBG DECK PLATES	AS	DT	53
1	01/22/09	GRINDING OBG DECK PLATES	AS	DT	53

REVISIONS

	BY	CHECKED
DESIGN	G. Baker	P. Ritchie
DETAILS	S. Camo	T. McMeans
QUANTITIES	C. Mauch	M. Roberts

PREPARED FOR THE STATE OF CALIFORNIA DEPARTMENT OF TRANSPORTATION

R. Manzanarez
PROJECT ENGINEER

BRIDGE NO. 34-0006L/R
KILOMETER POST 13.2/13.9

SAN FRANCISCO OAKLAND BAY BRIDGE
EAST SPAN SEISMIC SAFETY PROJECT
SELF-ANCHORED SUSPENSION BRIDGE
(SUPERSTRUCTURE & TOWER)

TYPICAL FLOORBEAM DETAILS NO. 4

Rev. Date: 5-18-98

ORIGINAL SCALE IN MILLIMETERS FOR REDUCED PLANS 0 10 20 30 40 50 60 70 80 90 100

CU 04
EA 0120F1

DISREGARD PRINTS BEARING EARLIER REVISION DATES → 05/31/99 08/02/99 05/31/01 04/08/02 07/01/02 12/19/02 11/13/05

REVISION DATES (PRELIMINARY STAGE ONLY)

SHEET 232R2 OF

FILE => I:\bb\04-0120F1\sas\contract plans and cco\cco\cco#53\revision 04-08-09\dgn\agftb06.dgn

100% PS&E

USERNAME => dwinrow DATE PLOTTED => 08 APR 2009 TIME PLOTTED => 10:51:07