DIST.	COUNTY	ROUTE	KILOMETER POST TOTAL PROJECT	SHEET NO.	TOTAL SHEETS
04	SF	80	13.2/13.9	575R4	1204

REGISTERED ENGINEER - CIVIL

12-6-04
PLANS APPROVAL DATE

REGISTERED PROFESSIONAL ENGINEER Marwan N. Nader No. C 054426 Exp. 12/31/09 CIVIL STATE OF CALIFORNIA

The State of California or its officers or agents shall not be responsible for the accuracy or completeness of electronic copies of this plan sheet.

T.Y. LIN / MOFFATT & NICHOL
825 BATTERY STREET
SAN FRANCISCO, CA 94111

Caltrans now has a web site! To get to the web site, go to: http://www.dot.ca.gov

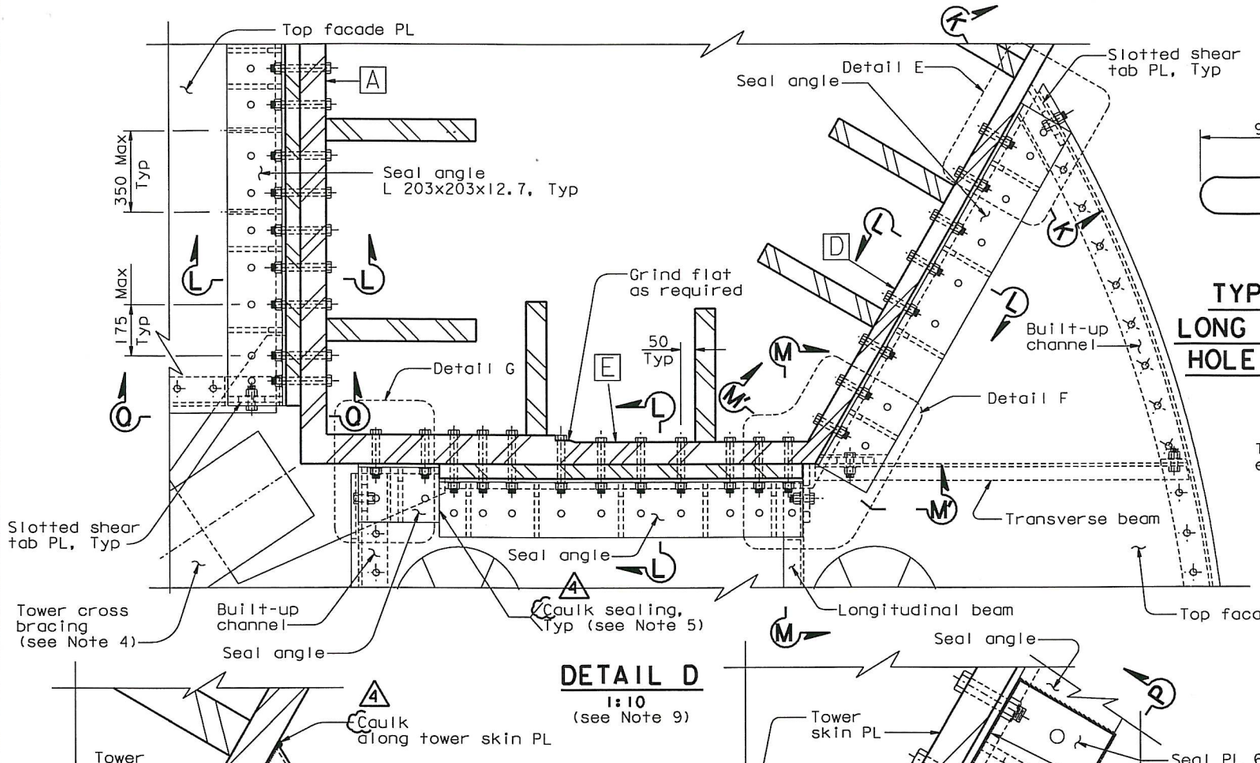

DETAIL D
1:10 (see Note 9)

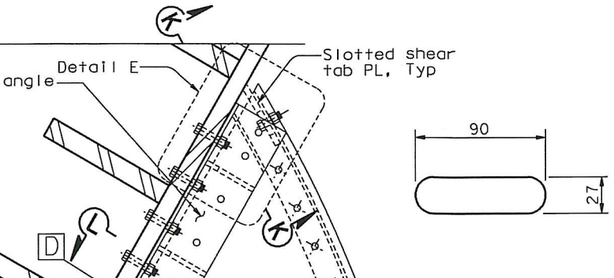

TYPICAL LONG SLOTTED HOLE DETAIL
1:2

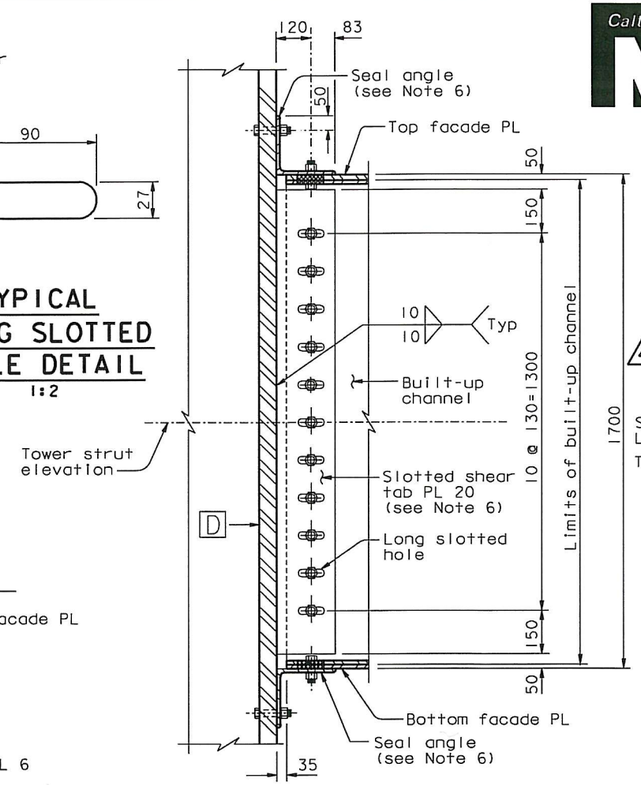

SECTION K-K
(Typical connection of built-up channel to tower shaft UNO)
1:10 (see Note 9)

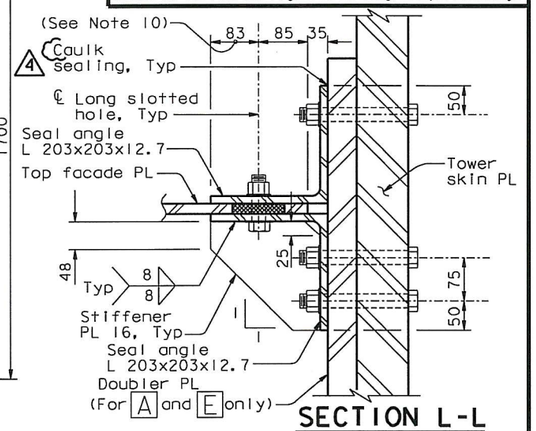

SECTION L-L
1:5 (see Note 9)

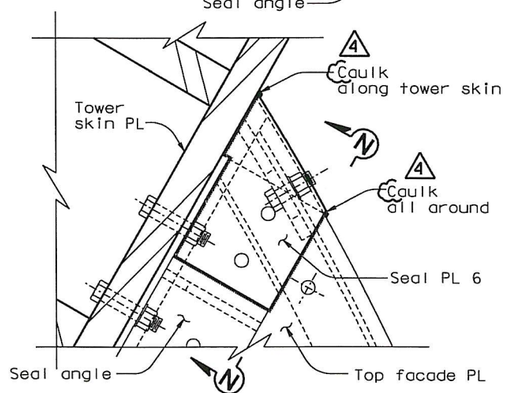

DETAIL E (Detail G similar)
1:5
(Typical edge seal Plate)

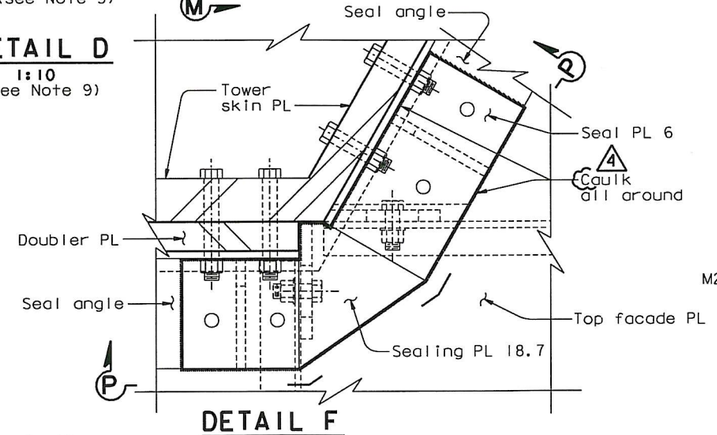

DETAIL F
1:5
(Typical corner seal Plate)

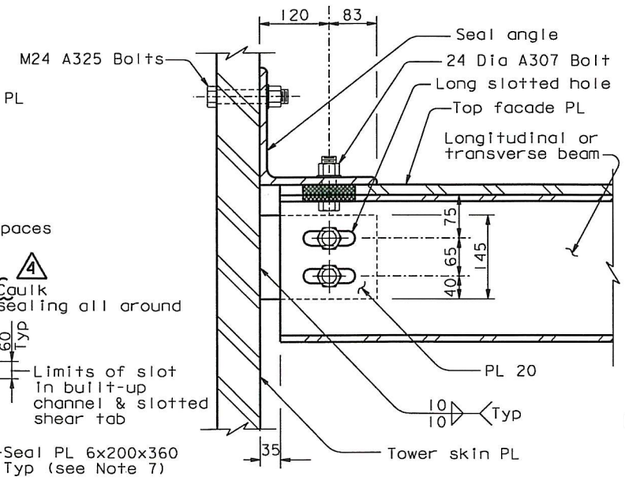

SECTION M-M
(Section M'-M' similar)
1:5 (see Note 9)

LEGEND:
- M24 A325-X Bolt
- 24 Dia A307 Bolt

NOTES:
1. All bolts are A325 M24 unless noted otherwise.
2. For details of built-up channel, see "Tower Strut Facade Details No.3" sheet.
3. All details of tower strut facade shall account for the 1% slope of the tower top and bottom facade plates.
4. For tower cross bracing location, see "Tower Strut Details No.9" sheet.
5. Seal plates and sealant material shall be placed such that the interior of the tower strut facade is properly sealed from the exterior.
6. PTFE film (0.5 thick) shall be applied on the faying surfaces between the slotted shear tab and the built-up channel plate, between the seal angle and the top facade PL, and between the seal angle and the bottom facade PL.
7. Seal plate shall be tight fit to the cross bracing gusset plate.
8. Cope vertical channel plate and slotted shear tab as necessary to accomodate cross bracing gusset plate. Slot location shall match slot in doubler plate . For doubler plate slot details, see "Tower Shaft Details No.11" sheet.
9. For sealing plate details, see Details E,F and Sections N-N,P-P,Q-Q.
10. At the Contractor's option, exterior sealing angle may be coped as required for clearance with access door cover plate to accommodate design movement, subject to review and approval of the Engineer.

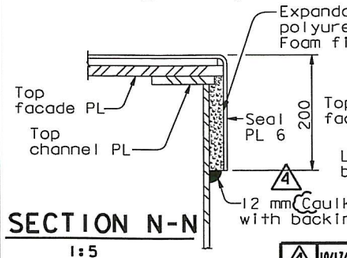

SECTION N-N
1:5

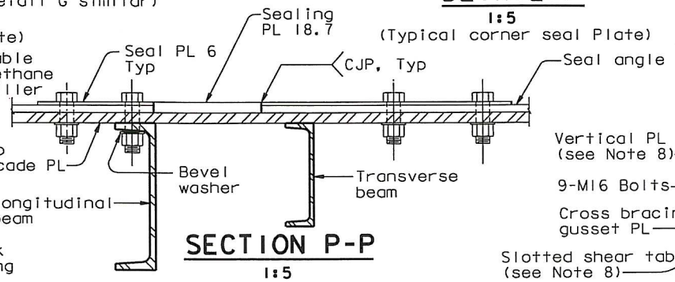

SECTION P-P
1:5

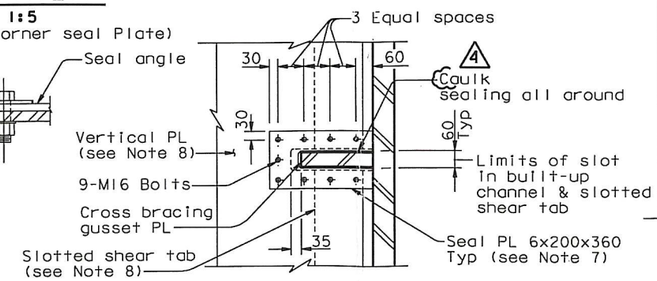

SECTION Q-Q (Typical gusset seal Plate)
1:10

ALL DIMENSIONS ARE IN MILLIMETERS UNLESS OTHERWISE SHOWN

MARK	DATE	DESCRIPTIONS	BY	CH'D	CCO#
4	10/17/08	CAULKING	NV	MN	66
3	10/01/08	TOWER ACCESS	NV	MN	65
2	07/11/08	TOWER STRUT FACADES AND CROSS BRACING	NV	MN	64
1	08/01/07	TOWER STRUT FACADE PTFE	NV	MN	48

REVISIONS

REQUESTS FOR INFORMATION NOT ADDRESSED IN THIS CCO REMAIN IN FORCE

CONTRACT CHANGE ORDER NO. 48
SHEET 3 OF 3

R. Valizadeh/V. Toan/Y.L./W.L./F.C.
DESIGN OVERSIGHT
Roya Valizadeh / Vang Toan / Y. Liu
SIGN OFF DATE 10/17/08

Rev. Date: 5-18-98

DESIGN	BY M. Nader	CHECKED M. Gulyas	
DETAILS	BY L. Rus	CHECKED M. Gulyas	
QUANTITIES	BY L. Rus	CHECKED Y. Zhang	

ORIGINAL SCALE IN MILLIMETERS FOR REDUCED PLANS 0 10 20 30 40 50 60 70 80 90 100

PREPARED FOR THE STATE OF CALIFORNIA DEPARTMENT OF TRANSPORTATION

R. Manzanarez
PROJECT ENGINEER

BRIDGE NO. 34-0006L/R
KILOMETER POST 13.2/13.9

CU 04
EA 0120F1

DISREGARD PRINTS BEARING EARLIER REVISION DATES

REVISION DATES (PRELIMINARY STAGE ONLY) 08/02/99 05/31/01 04/08/02 04/26/02 12/19/02

SHEET 158R4 OF

SAN FRANCISCO OAKLAND BAY BRIDGE
EAST SPAN SEISMIC SAFETY PROJECT
SELF-ANCHORED SUSPENSION BRIDGE
(SUPERSTRUCTURE & TOWER)

TOWER STRUT FACADE DETAILS NO. 4

FILE => L:\BB\04-012001\SAS\Contract Plans and CCO\CCO\In Progress\CCO#66\Revision 10-17-08\DGN\aetws13.dgn

USERNAME => dwinrow DATE PLOTTED => 16 OCT 2008 TIME PLOTTED => 08:41:16

100 % PS&E