DIST	COUNTY	ROUTE	KILOMETER POST TOTAL PROJECT	SHEET No	TOTAL SHEETS
04	SF	80	13.2/13.9	117R1	1204

REGISTERED ELECTRICAL ENGINEER 12/19/02 DATE

12-6-04
PLANS APPROVAL DATE

REGISTERED PROFESSIONAL ENGINEER JENS ERLINGSSON No. 8249 Exp. 9/30/06 ELECTRICAL STATE OF CALIFORNIA

PB POWER, Inc.
A Parsons Brinckerhoff Company
303 Second St., Suite 700N
San Francisco, CA 94107-1317

The State of California or its officers or agents shall not be responsible for the accuracy or completeness of electronic copies of this plan sheet.

Caltrans now has a web site! To get to the web site, go to http://www.dot.ca.gov

Caltrans Metric

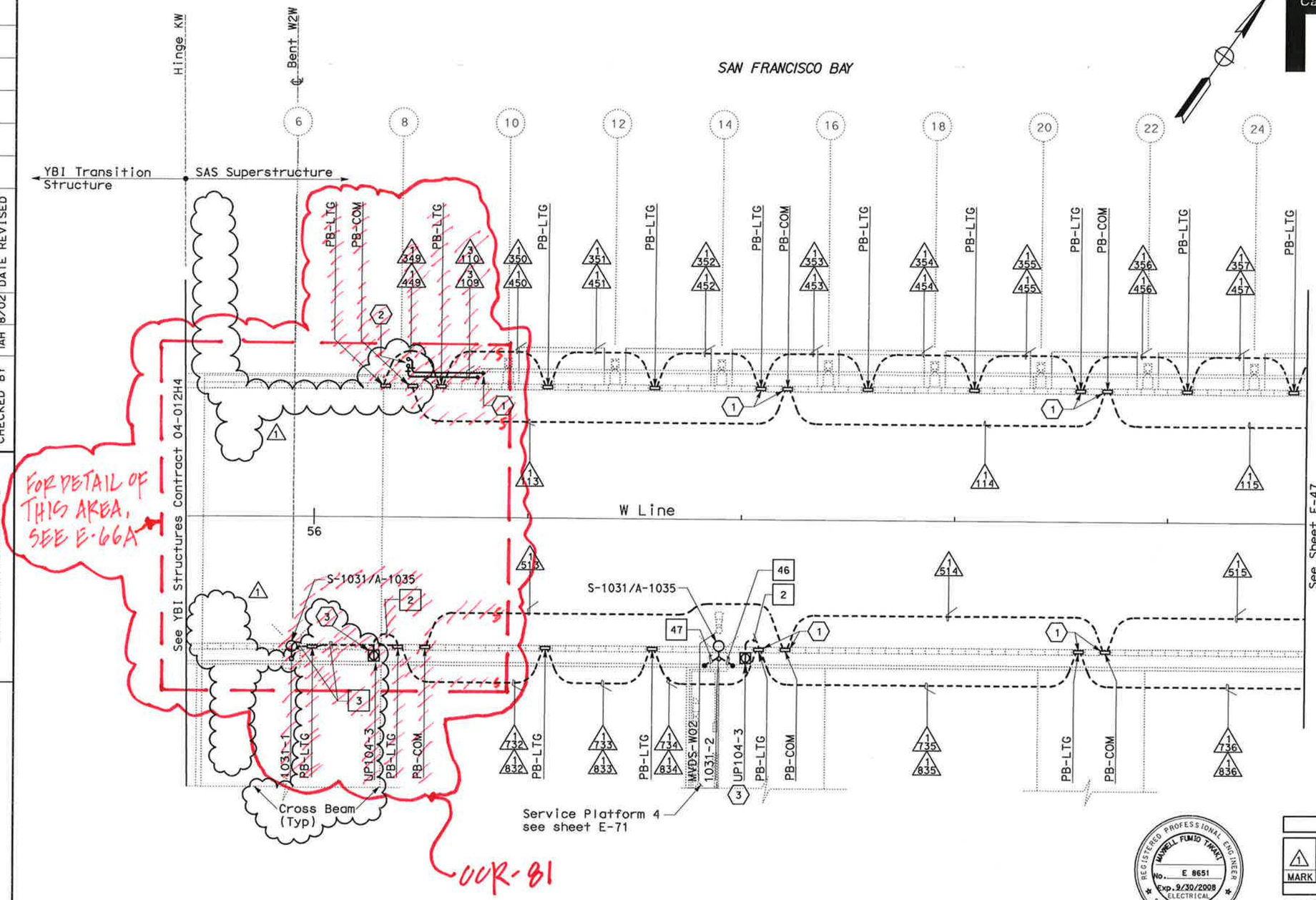

SHEET NOTES:

1. Conduit from barrier pullbox or other equipment down into Girder, see sheet E-96.
2. For conduit to Suspend Lighting, see sheet E-226. Typ for all PB-LTG located on the north side of the roadway.
3. Roadway Barrier Receptacle, see Detail 1, sheet E-68.

CCR-81

NOTES:

1. References:
   - For typical details and locations of conduit connections to light poles, barrier outlet boxes, call boxes, overhead sign lighting, CCTV and MVDS, see sheets E-66, E-67 and E-68.
   - TOS equipment is shown for conduit routing only. For typical details of TOS controller and devices, see sheets E-344 through E-357.
   - For types of pullboxes, splice boxes and enclosures, see sheet E-83.
   - For circuit and conduit/cable tray schedules, see sheets starting at E-401.
2. For Roadway Level Lighting Pole Schedules, see sheet E-82.

CONDUIT PLAN

REGISTERED PROFESSIONAL ENGINEER MARCELL FUMIO TAKAKI No. E 8651 Exp. 9/30/2008 ELECTRICAL STATE OF CALIFORNIA

FOR REVISION ONLY

REQUEST FOR INFORMATION NOT ADDRESSED IN THIS CCO REMAIN IN FORCE

MARK	DATE	DESCRIPTIONS	BY	CH'D	CCO#
1	02/19/08	ELECTRICAL MODIFICATIONS	MP EL	RR	42

REVISIONS

CONTRACT CHANGE ORDER NO. _____
SHEET _____ OF _____

SAS SUPERSTRUCTURE ROADWAY WESTBOUND
LIGHTING AND ELECTRICAL SYSTEMS

SCALE 1:200

SKETCH No. CCR-81-SK-E-46 R1

R. Garcia 5/28/09

THIS PLAN IS ACCURATE FOR ELECTRICAL WORK ONLY.

E-46

REVISED BY	DATE REVISED
FK	DATE 8/02
IAH	8/02

CALCULATED/DESIGNED BY
CHECKED BY

DESIGN OVERSIGHT
BEHZAD GOLEMOHAMMADI

STATE OF CALIFORNIA - DEPARTMENT OF TRANSPORTATION
Caltrans

LAST REVISION
DATE PLOTTED => 5/28/2009

FOR REDUCED PLANS ORIGINAL 0 20 40 60 80

DGN FILE =>C:\Documents and Settings\garciaR\My Documents\SAS Files\CCR-81\Sketch CCR-81-E-46R0.dgn

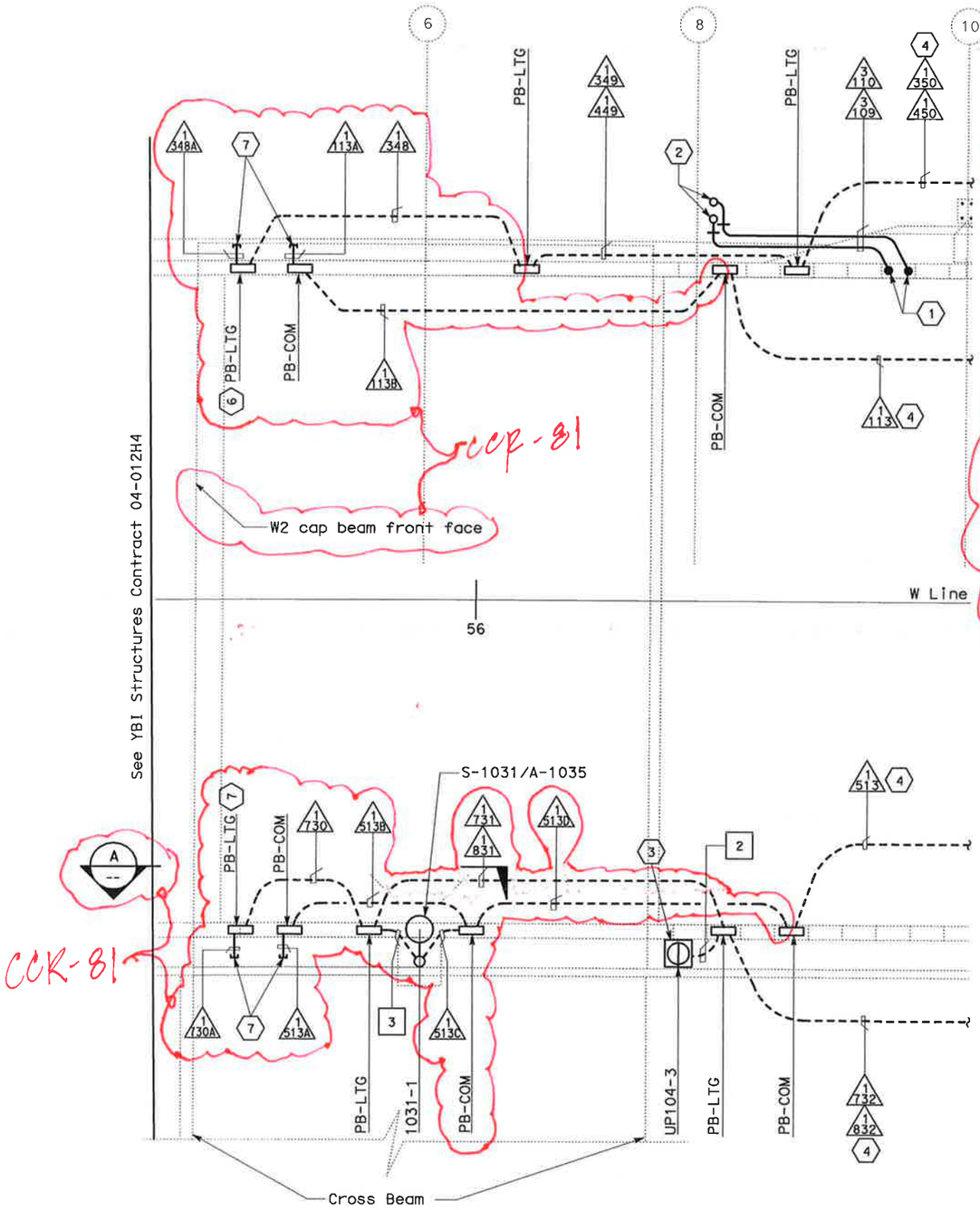

CONDUIT PLAN

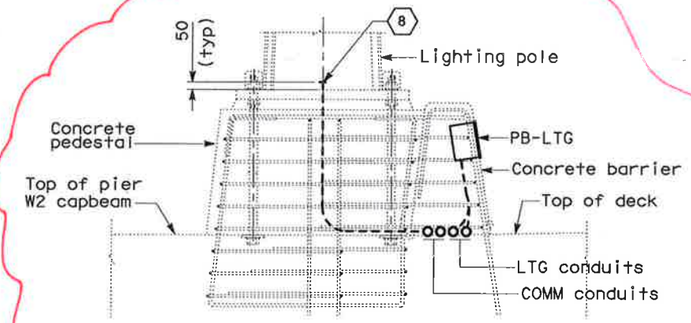

SECTION D-D

NO SCALE

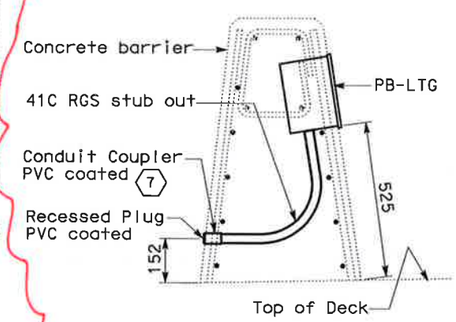

SECTION B-B

NO SCALE

Typical for PB-LTG in concrete barrier.

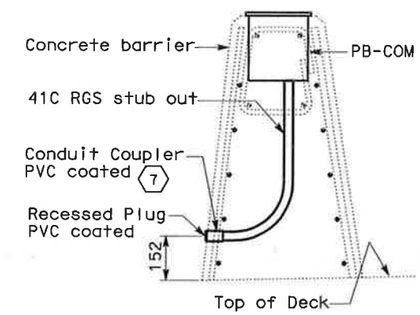

SECTION C-C

NO SCALE

Typical for PB-COM in concrete barrier.

CCR-81

SHEET NOTES:

1. Conduit from barrier pullbox or other equipment down into Girder, see sheet E-96.
2. For conduit to Suspend Lighting, see sheet E-226. Typ for all PB-LTG located on the north side of the roadway.
3. Roadway Barrier Receptacle, see Detail 1, sheet E-68.
4. See drawing E-46 for continuation of conduits.
6. Contractor shall verify dimension and locate PB-LTG with sufficient distance to accommodate required clearance for the expansion joint.
7. Conduit shall be stub-out at the non-roadway side of the barrier with the coupler flushed to the barrier face wall.
8. Capped end of conduit stub-ups.

NOTES:

1. For general notes, see E-46.

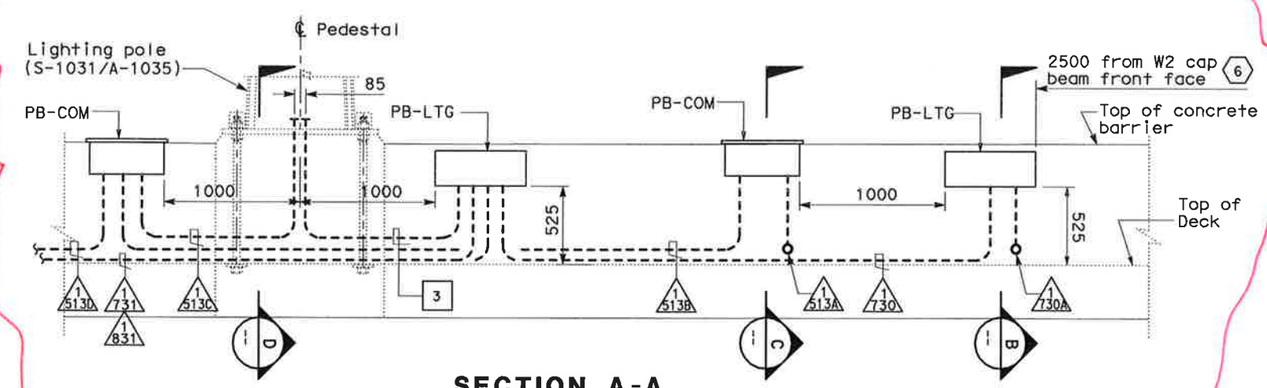

SECTION A-A

NO SCALE

Similar for installation of PB-LTG and PB-COM on north side concrete barrier.
Conduit routing varies, see conduit plan.

DETAILS
SAS SUPERSTRUCTURE ROADWAY WESTBOUND CONDUIT LOCATIONS

SCALE: 1:100

SKETCH No. CCR-81-SK-E-66A R0

R. Garcia 5/28/09

E-66A

DIST	COUNTY	ROUTE	KILOMETER POST TOTAL PROJECT	SHEET No	TOTAL SHEETS
04	SF	80	13.2/13.9	149 R2	1204

12/19/02
REGISTERED ELECTRICAL ENGINEER DATE

12-6-04
PLANS APPROVAL DATE

REGISTERED PROFESSIONAL ENGINEER JENS ERLINGSSON No. 8249 Exp. 9/30/06 ELECTRICAL STATE OF CALIFORNIA

PB POWER, Inc.
A Parsons Brinckerhoff Company
303 Second St., Suite 700N
San Francisco, CA 94107-1317

The State of California or its officers or agents shall not be responsible for the accuracy or completeness of electronic copies of this plan sheet.

Caltrans now has a web site! To get to the web site, go to http://www.dot.ca.gov

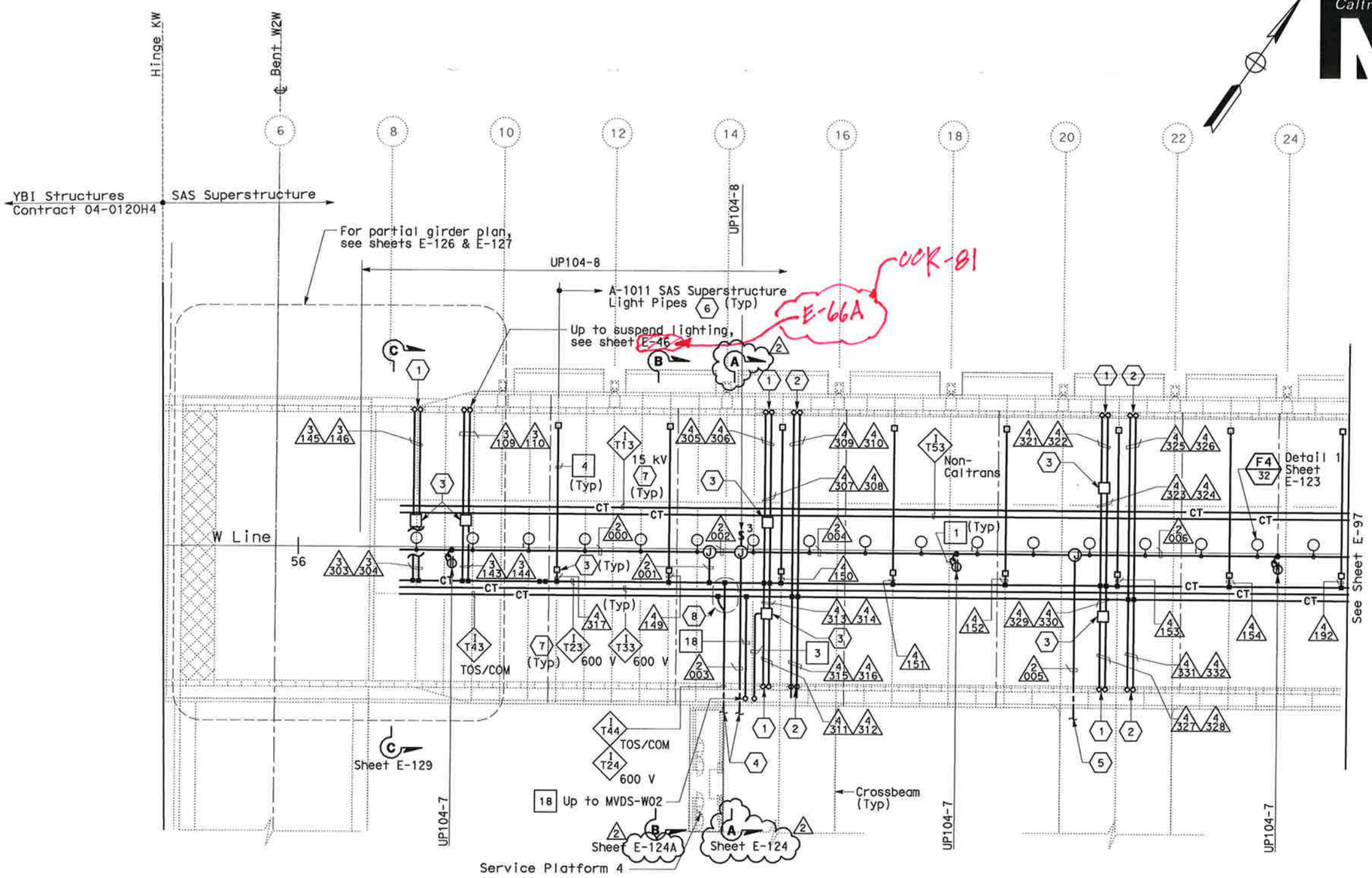

SAS SUPERSTRUCTURE - CONDUIT AND CABLE TRAY PLAN

SHEET NOTES:

1. Conduit up to PB-LTG located in barrier, see sheet E-46.
2. Conduit up to PB-COM located in barrier, see sheet E-46.
3. PB-2A locate on top of floor.
4. For cable tray run and lighting inside crossbeam, see sheet E-114.
5. For lighting inside crossbeam, see sheet E-119.
6. PB-2L with circuit for future light pipes. See sheet E-121 for installation details and E-130 for lighting schedule.
7. For cable tray & ground bar support, refer to sheet E-125.
8. For fiber splice tray detail, refer to sheet E-356.

NOTES:

1. References:
   - TOS equipment is shown for conduit routing only. For typical details of TOS controller and devices, see sheets E-344 through E-357.
   - For types of pull boxes, splice boxes and enclosures, see sheet E-83.
   - For bridge grounding plan, see sheet E-111.
   - For circuit and conduit/cable tray schedules, see sheets starting at E-401.
2. For other work related to Hinge KW and items not shown on this sheet, see Electrical Special Provisions.
3. The girder lighting fixtures are shown diagrammatically.Contractor shall install fixtures at railing posts with a maximum of 8000 mm between fixtures. For types and typical lighting fixture installation details, see sheet E-123.
4. The cable trays are shown diagrammatically. For typical girder cable tray plans and sections, see sheets E-124 and E-125.

REGISTERED PROFESSIONAL ENGINEER FADI WALIEDDINE No. 11465 Exp.12/31/2009 ELECTRICAL STATE OF CALIFORNIA

FOR REVISION ONLY

REQUEST FOR INFORMATION NOT ADDRESSED IN THIS CCO REMAIN IN FORCE					
2	02/25/08	CABLE TRAY CHANGES	RG	FW	42S1
1	02/19/08	ELECTRICAL MODIFICATIONS	MP EL	RR	42
MARK	DATE	DESCRIPTIONS	BY	CH'D	CCO#
		REVISIONS			

CONTRACT CHANGE ORDER NO._____
SHEET _____ OF _____

SKETCH No. CCR-81-SK-E-96 R0
R. Garcia 5/28/09

SAS SUPERSTRUCTURE GIRDER WESTBOUND
LIGHTING AND ELECTRICAL SYSTEMS
SCALE 1:200

THIS PLAN IS ACCURATE FOR ELECTRICAL WORK ONLY.

ALL DIMENSIONS ARE IN MILLIMETERS UNLESS OTHERWISE SHOWN.

E-96

STATE OF CALIFORNIA - DEPARTMENT OF TRANSPORTATION
Caltrans

DESIGN OVERSIGHT: BEHZAD GOLEMOHAMMADI
CALCULATED/DESIGNED BY: FK DATE 8/02 REVISED BY
CHECKED BY: IAH 8/02 DATE REVISED

FOR REDUCED PLANS ORIGINAL 0 20 40 60 80

DGN FILE =>c:\Documents and Settings\garciaR\My Documents\SAS Files\CCR-81\Sketch CCR-81-E-96R1.dgn

LAST REVISION 00 00 00 DATE PLOTTED => 5/28/2009

DIST	COUNTY	ROUTE	KILOMETER POST TOTAL PROJECT	SHEET No	TOTAL SHEETS
04	SF	80	13.2/13.9	188R2	1204

REGISTERED ELECTRICAL ENGINEER 12/19/02 DATE

12-6-04
PLANS APPROVAL DATE

REGISTERED PROFESSIONAL ENGINEER JENS ERLINGSSON No. 8249 Exp. 9/30/06 ELECTRICAL STATE OF CALIFORNIA

PB POWER, Inc.
A Parsons Brinckerhoff Company
303 Second St., Suite 700N
San Francisco, CA 94107-1317

The State of California or its officers or agents shall not be responsible for the accuracy or completeness of electronic copies of this plan sheet.

Caltrans now has a web site! To get to the web site, go to: http://www.dot.ca.gov

Caltrans Metric

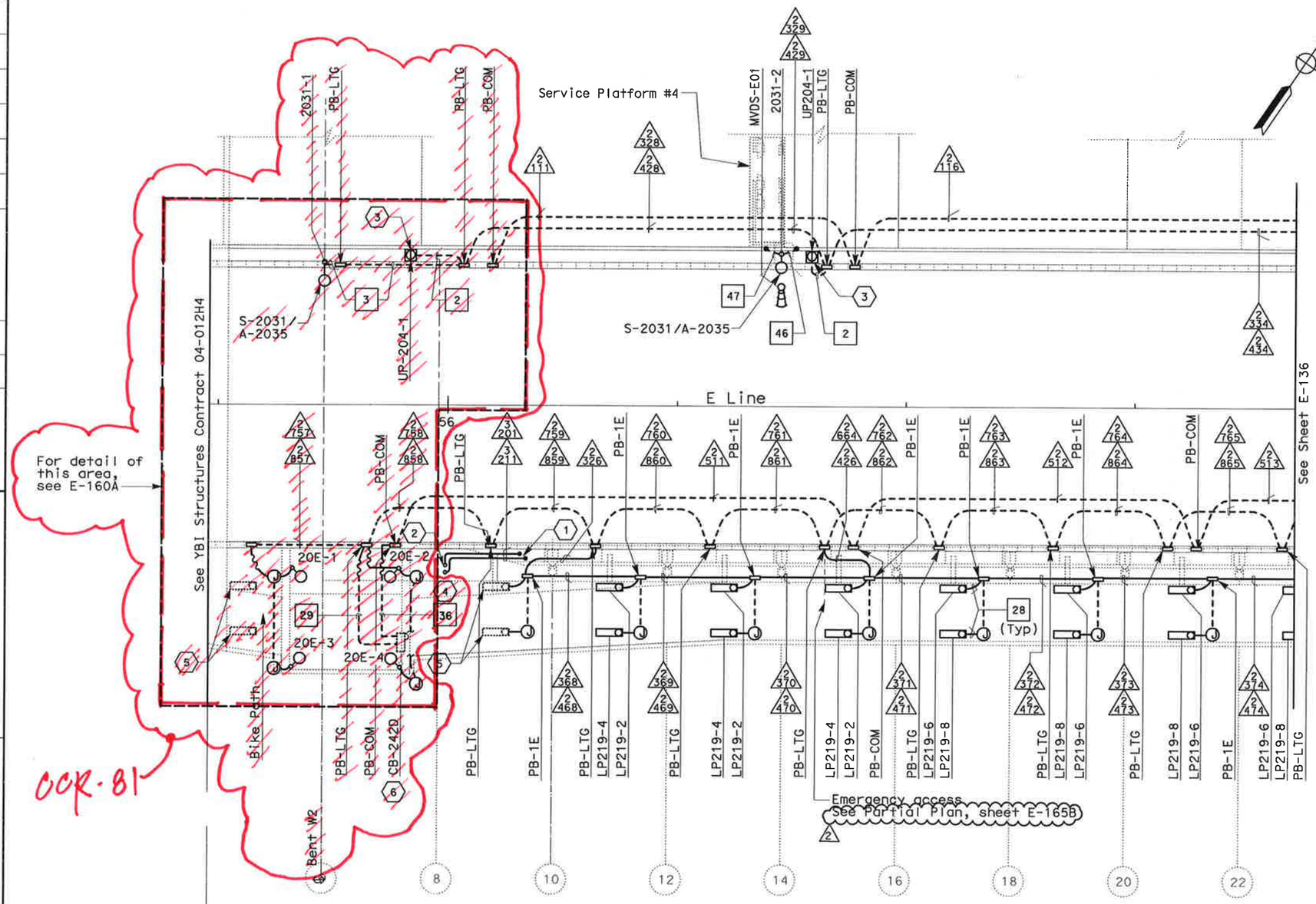

SAS SUPERSTRUCTURE - CONDUIT PLAN

YBI Structures | SAS Superstructure

Hinge KE

SHEET NOTES:

1. Conduit from barrier pull box or other equipment down into Girder Box, see sheet E-181.
2. For conduit to suspension cable lighting, see sheet E-226.
3. Roadway Barrier Receptacle, see Detail 1, sheet E-162.
4. Contractor shall coil 30 meters inside cable tray for feed into PB-COM by others. CCR-81
5. Railing lights are contractor furnished and installed by others.
6. Bike path electrical components west of PP-9 are furnished by contractor and installed by others.
7. 41C Rigid Galvanized Steel with PVC coated coupler and plug that stub-out at the non-roadway side of the barrier. Coupler shall be flushed to the barrier face wall.

1. References:
   - For typical details and locations of conduit connections to light poles, barrier outlet boxes, call boxes, overhead sign lighting, CMS, CCTV and MVDS, see sheets E-160 thru E-162 and E-169.
   - TOS equipment is shown for conduit routing only. For typical details of TOS controller and devices, see sheets E-344 through E-357.
   - For types of pull boxes, splice boxes and enclosures, see sheet E-169.
   - For circuit and conduit/cable tray schedules, see sheets starting at E-401.
2. For Roadway level, Bike Path and Belvedere Lighting Fixture Schedules and wiring diagrams see sheets E-146, E-147 and E-165.
3. For Roadway level and Bike Path Call Box Schedule, see sheet E-397.
4. For number of lighting fixtures (main tower lights) see lighting schedule sheets E-271 and E-272.
5. All conduits and fittings routed exposed between the Bike Path and the roadway shall be galvanized rigid steel, PVC coated.
6. See sheets E-160 thru E-165 for conduit locations.
7. For Belvedere Lighting Fixture installation, see sheet E-173.

REQUEST FOR INFORMATION NOT ADDRESSED IN THIS CCO REMAIN IN FORCE

MARK	DATE	DESCRIPTIONS	BY	CH'D	CCO#
2	12/15/08	BIKE PATH DETAILS	TW	RG FW	99
1	02/19/08	ELECTRICAL MODIFICATIONS	MP EL	RR	42

REVISIONS

CONTRACT CHANGE ORDER NO. _____
SHEET _____ OF _____

REGISTERED PROFESSIONAL ENGINEER MAXWELL FUMIO TAKAKI No. E 8651 Exp. 9/30/2008 ELECTRICAL STATE OF CALIFORNIA
FOR REVISION ONLY 1

REGISTERED PROFESSIONAL ENGINEER FADI WALIEDDINE No. 11465 Exp. 12/31/2009 ELECTRICAL STATE OF CALIFORNIA
FOR REVISION ONLY 2

SAS SUPERSTRUCTURE ROADWAY EASTBOUND
LIGHTING AND ELECTRICAL SYSTEMS

SCALE 1:200

SKETCH No. CCR-81SK-E-135 R1

R. Garcia 5/28/09

E-135

THIS PLAN ACCURATE FOR ELECTRICAL WORK ONLY.

ALL DIMENSIONS ARE IN METERS UNLESS OTHERWISE SHOWN.

FOR REDUCED PLANS ORIGINAL 0 20 40 60 80

DGN FILE =>C:\Documents and Settings\garciaR\My Documents\SAS Files\CCR-81\Sketch CCR-81-E-135R1.dgn

STATE OF CALIFORNIA - DEPARTMENT OF TRANSPORTATION
Caltrans

DESIGN OVERSIGHT: BEHZAD GOLEMOHAMMADI

CALCULATED/DESIGNED BY | CHECKED BY | EDC CYF | DATE 08/02 08/02 | REVISED BY | DATE REVISED

DATE PLOTTED => 5/27/2009

LAST REVISION

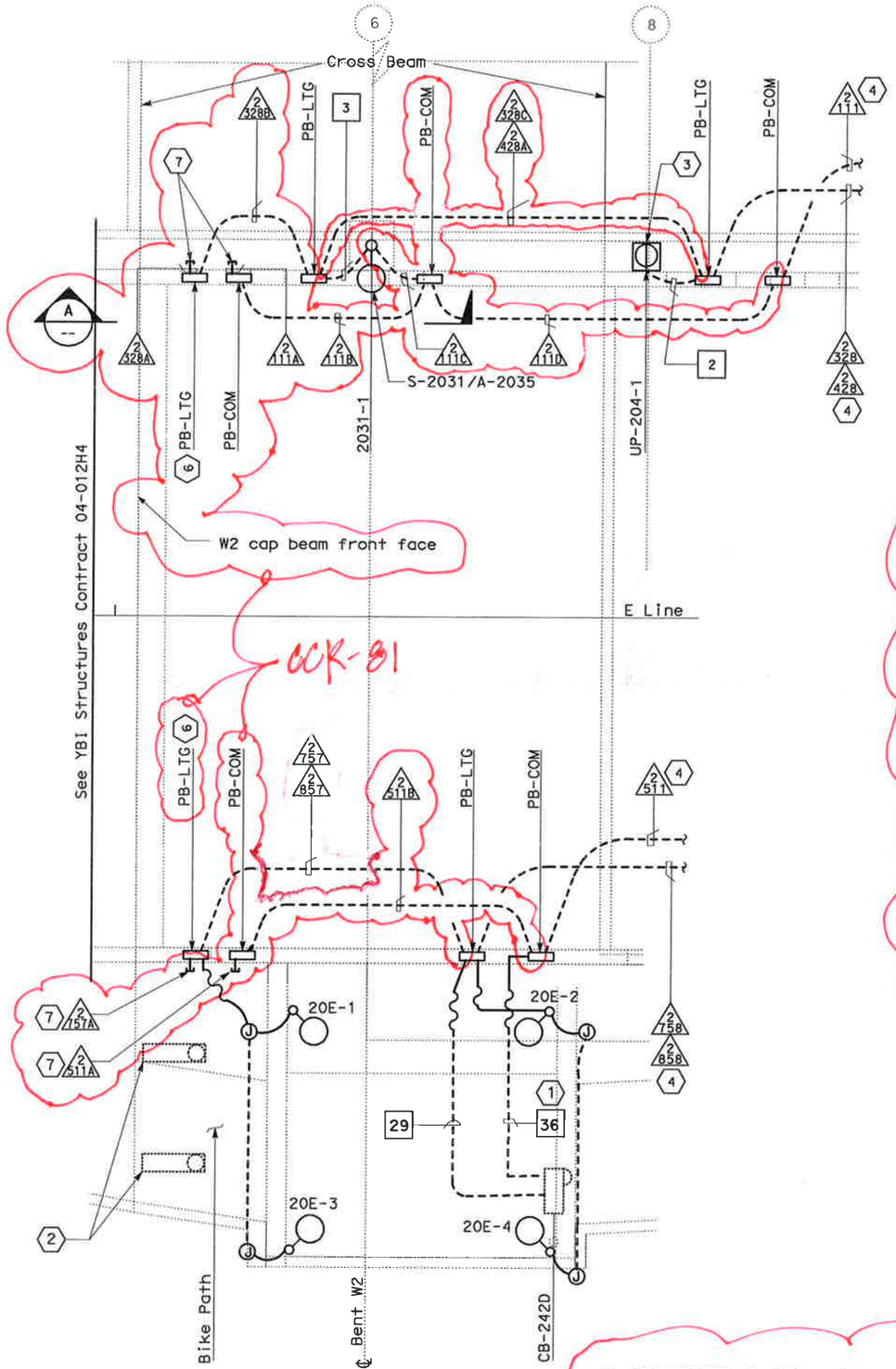

CONDUIT PLAN

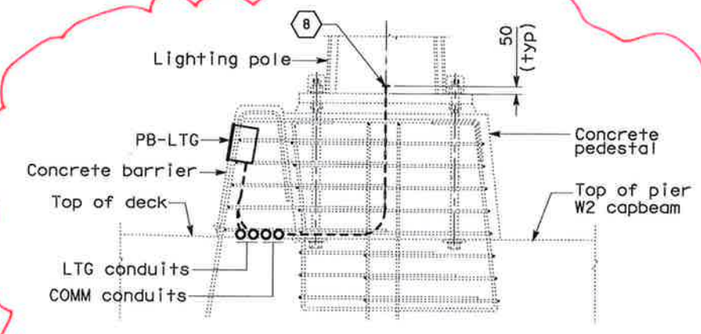

CCR-81

SECTION D-D
NO SCALE

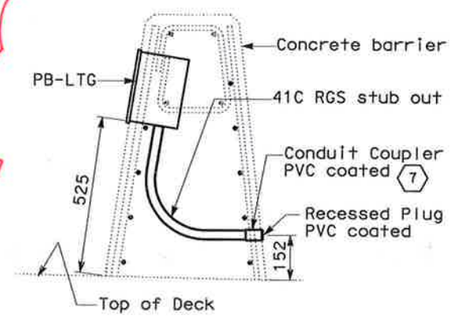

SECTION B-B
NO SCALE
Typical for PB-LTG in concrete barrier.

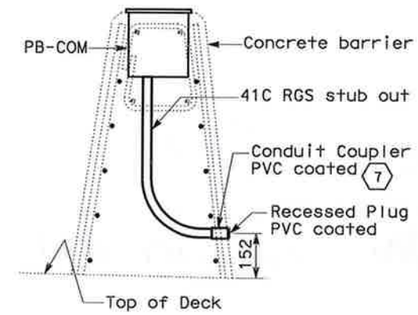

SECTION C-C
NO SCALE
Typical for PB-COM in concrete barrier.

SHEET NOTES:

1. Contractor shall coil 30 meters inside cable tray for feed into PB-COM by others.
2. Railing lights are conrtractor furnished and installed by others.
3. Roadway Barrier Receptacle, see Detail 1, sheet E-68.
4. See drawing E-135 for continuation of conduits.
6. Contractor shall verify dimension and locate PB-LTG with sufficient distance to accommodate required clearance for the expansion joint.
7. Conduit shall be stub-out at the non-roadway side of the barrier with the coupler flushed to the barrier face wall.
8. Capped end of conduit stub-ups.

NOTES:

1. Bike path electrical components west of PP-9 are furnished by contractor and installed by others.
2. For additional general notes, see E135.

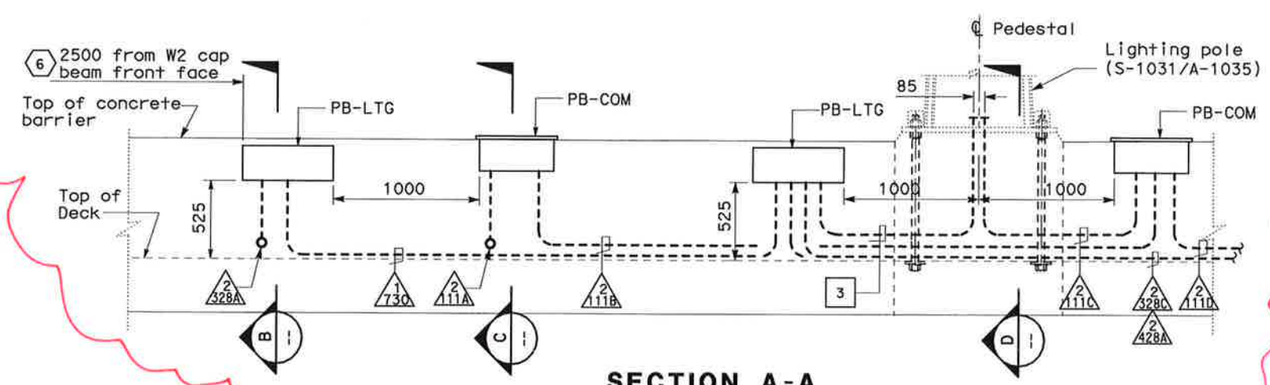

SECTION A-A
NO SCALE
Similar for installation of PB-LTG and PB-COM on south side concrete barrier.
Conduit routing varies, see conduit plan.

DETAILS
SAS SUPERSTRUCTURE ROADWAY EASTBOUND LIGHTING AND ELECTRICAL SYSTEMS
SCALE: 1:100

SKETCH No. CCR-81-SK-E-160A R0

R. Garcia 5/28/09

E-160A

DIST	COUNTY	ROUTE	KILOMETER POST TOTAL PROJECT	SHEET No	TOTAL SHEETS
04	SF	80	13.2/13.9		

Caltrans Metric

REGISTERED ELECTRICAL ENGINEER DATE

PLANS APPROVAL DATE

REGISTERED PROFESSIONAL ENGINEER No. Exp. ELECTRICAL STATE OF CALIFORNIA

PB AMERICAS, Inc.
A Parsons Brinckerhoff Company
303 Second St., Suite 700N
San Francisco, CA 94107-1317

The State of California or its officers or agents shall not be responsible for the accuracy or completeness of electronic copies of this plan sheet.

Caltrans now has a web site! To get to the web site, go to http://www.dot.ca.gov

CCR-81

CONDUIT DATA

Conduit No	Reference	Size	Type	Total Fill (mm²)	Allowable Fill (mm²)	Included Cable No.	Conductor Type
1113A	E-66A	41	RGS Conduit		534.55	Pull rope	Soft-fiber Polyester
1113B	E-66A	41	RGS Conduit		534.55	Pull rope	Soft-fiber Polyester
1348	E-66A	41	RGS Conduit		534.55	Pull rope	Soft-fiber Polyester
1348A	E-66A	41	RGS Conduit		534.55	Pull rope	Soft-fiber Polyester
1513A	E-66A	41	RGS Conduit		534.55	Pull rope	Soft-fiber Polyester
1513B	E-66A	41	RGS Conduit		534.55	Pull rope	Soft-fiber Polyester
1513C	E-66A	41	RGS Conduit		534.55	Pull rope	Soft-fiber Polyester
1513D	E-66A	41	RGS Conduit		534.55	Pull rope	Soft-fiber Polyester
1730	E-66A	41	RGS Conduit		534.55	Pull rope	Soft-fiber Polyester
1730A	E-66A	41	RGS Conduit		534.55	Pull rope	Soft-fiber Polyester
1731	E-66A	41	RGS Conduit		534.55	Pull rope	Soft-fiber Polyester
1831	E-66A	41	RGS Conduit		534.55	Pull rope	Soft-fiber Polyester
2111A	E-160A	41	RGS Conduit		534.55	Pull rope	Soft-fiber Polyester
2111B	E-160A	41	RGS Conduit		534.55	Pull rope	Soft-fiber Polyester
2111C	E-160A	41	RGS Conduit		534.55	Pull rope	Soft-fiber Polyester

CONDUIT DATA

Conduit No	Reference	Size	Type	Total Fill (mm)	Allowable Fill (mm)	Included Cable No.	Conductor Type
2111D	E-160A	41	RGS Conduit		534.55	Pull rope	Soft-fiber Polyester
2328A	E-160A	41	RGS Conduit		534.55	Pull rope	Soft-fiber Polyester
2328B	E-160A	41	RGS Conduit		534.55	Pull rope	Soft-fiber Polyester
2328C	E-160A	41	RGS Conduit		534.55	Pull rope	Soft-fiber Polyester
2428A	E-160A	41	RGS Conduit		534.55	Pull rope	Soft-fiber Polyester
2511A	E-160A	41	RGS Conduit		534.55	Pull rope	Soft-fiber Polyester
2511B	E-160A	41	RGS Conduit		534.55	Pull rope	Soft-fiber Polyester
2757A	E-160A	41	RGS Conduit		534.55	Pull rope	Soft-fiber Polyester

CONDUIT AND TRAY SCHEDULE

SKETCH No. CCR-81-SK-E-001 R1

R. Garcia 5/28/09

REVISED BY	DATE REVISED
XXX	XXX
XXX	XXX

CALCULATED/DESIGNED BY	DATE XXX
XXX	XXX
CHECKED BY	

DESIGN OVERSIGHT
BEHZAD GOLEMOHAMMADI

STATE OF CALIFORNIA - DEPARTMENT OF TRANSPORTATION
Caltrans

FOR REDUCED PLANS ORIGINAL 0 20 40 60 80

DGN FILE =>C:\Documents and Settings\garcir\My Documents\SAS Files\CCR-81\Sketch CCR-81-SK-E-001R0.dgn

LAST REVISION DATE PLOTTED => 5/28/2009

DIST	COUNTY	ROUTE	KILOMETER POST TOTAL PROJECT	SHEET No	TOTAL SHEETS
04	SF	80	13.2/13.9	357R1	1204

REGISTERED ELECTRICAL ENGINEER 12/19/02 DATE

12-6-04
PLANS APPROVAL DATE

REGISTERED PROFESSIONAL ENGINEER JENS ERLINGSSON No. 8249 Exp. 9/30/06 ELECTRICAL STATE OF CALIFORNIA

PB POWER, Inc.
A Parsons Brinckerhoff Company
303 Second St., Suite 700N
San Francisco, CA 94107-1317

The State of California or its officers or agents shall not be responsible for the accuracy or completeness of electronic copies of this plan sheet.

Caltrans now has a web site! To get to the web site, go to http://www.dot.ca.gov

Caltrans Metric

REQUEST FOR INFORMATION NOT ADDRESSED IN THIS CCO REMAIN IN FORCE

MARK	DATE	DESCRIPTIONS	BY	CH'D	CCO#
1	02/19/08	ELECTRICAL MODIFICATIONS	MP EL	RR	42

REVISIONS

CONTRACT CHANGE ORDER NO. _____
SHEET _____ OF _____

REGISTERED PROFESSIONAL ENGINEER MAXWELL FUMIO TAKATA No. E 8651 Exp. 9/30/2008 ELECTRICAL STATE OF CALIFORNIA

FOR REVISION ONLY

CONDUIT DATA

Conduit No	Reference	Size	Type	Total Fill (mm²)	Allowable Fill (mm²)	Included Cable No.	Conductor Type
0583	E-11, E-21	103	RGS conduit	3077.66	3324.51	Pull rope	Soft-Fiber Polyester
						2121	1-3/C + gnd #1/0, 600 V, EPR insulation
						2120	1-3/C + gnd #1/0, 600 V, EPR insulation
						2125	1-3/C + gnd 250 kcmil, 600 V, EPR insulation
0584	E-11, E-21	103	RGS conduit	2518.76	3324.51	A-3043-1	1-3/C + gnd #2, 600 V, EPR insulation
						S-3051-1	1-3/C + gnd #4, 600 V, EPR insulation
						A-3006-1	1-3/C + gnd #4, 600 V, EPR insulation
						S-3022-1	1-3/C + gnd #2, 600 V, EPR insulation
						S-3023-1	1-3/C + gnd #4, 600 V, EPR insulation
						S-3021-1	1-3/C + gnd #4, 600 V, EPR insulation
						Pull rope	Soft-Fiber Polyester
0585	E-11, E-20	103	RGS conduit	647.30	3324.51	Pull rope	Soft-Fiber Polyester
						1477-2	72 Fiber, single mode fiberoptic riser cable
						1475-3	72 Fiber, single mode fiberoptic riser cable
0586	E-11, E-21	103	RGS conduit	1296.55	3324.51	2910-2	4 pair #22, shielded pairs, FEP insulation
						Pull rope	Soft-Fiber Polyester
						2910-3	4 pair #22, shielded pairs, FEP insulation
						1473-4	50 pair #18, shielded pairs, IS/OS shield 600 V, XLPE insul., PVC jacket
0587	E-11, E-21	103	RGS conduit	2780.99	3324.51	2391	3-1/C #4/0 + 1/C#1/0 gnd, 15 kV, EPR insulation
						Pull rope	Soft-Fiber Polyester
0588	E-11, E-21	103	RGS conduit	0.00	3324.51	Pull rope	Soft-Fiber Polyester
0590	E-11, E-20	103	RGS conduit	0.00	3324.51	Pull rope	Soft-Fiber Polyester
0591	E-11, E-21	103	RGS conduit	0.00	3324.51	Pull rope	Soft-Fiber Polyester
0600	E-11, E-20	103	RGS conduit	0.00	3324.51	Pull rope	Soft-Fiber Polyester
0601	E-11, E-20	103	RGS conduit	0.00	3324.51	Pull rope	Soft-Fiber Polyester
0602	E-11, E-20	103	RGS conduit	1201.71	3324.51	1474-4	50 pair #18, shielded pairs, IS/OS shield 600V, XLPE insul., PVC jacket
						Pull rope	Soft-Fiber Polyester
0603	E-11, E-20	103	RGS conduit	0.00	3324.51	Pull rope	Soft-Fiber Polyester
0610	E-11, E-21	103	RGS conduit	0.00	3324.51	Pull rope	Soft-Fiber Polyester
0611	E-11, E-21	103	RGS conduit	0.00	3324.51	Pull rope	Soft-Fiber Polyester
0612	E-11, E-21	103	RGS conduit	0.00	3324.51	Pull rope	Soft-Fiber Polyester
0613	E-11, E-21	103	RGS conduit	0.00	3324.51	Pull rope	Soft-Fiber Polyester
1 ~~1112~~	CCR-81						
1113	E-46, E-66A	41	RGS conduit	0.00	534.55	Pull rope	Soft-Fiber Polyester
1114	E-46	41	RGS conduit	0.00	534.55	Pull rope	Soft-Fiber Polyester
1115	E-46	41	RGS conduit	0.00	534.55	Pull rope	Soft-Fiber Polyester
1116	E-47	41	RGS conduit	0.00	534.55	Pull rope	Soft-Fiber Polyester
1117	E-47	41	RGS conduit	0.00	534.55	Pull rope	Soft-Fiber Polyester
1118	E-47	41	RGS conduit	0.00	534.55	Pull rope	Soft-Fiber Polyester
1119	E-47, E-48	41	RGS conduit	0.00	534.55	Pull rope	Soft-Fiber Polyester
1120	E-48	41	RGS conduit	0.00	534.55	Pull rope	Soft-Fiber Polyester
1121	E-48	41	RGS conduit	0.00	534.55	Pull rope	Soft-Fiber Polyester
1122	E-48	41	RGS conduit	0.00	534.55	Pull rope	Soft-Fiber Polyester
1123	E-49	41	RGS conduit	0.00	534.55	Pull rope	Soft-Fiber Polyester
1124	E-49	41	RGS conduit	0.00	534.55	Pull rope	Soft-Fiber Polyester

CONDUIT DATA

Conduit No	Reference	Size	Type	Total Fill (mm²)	Allowable Fill (mm²)	Included Cable No.	Conductor Type
1125	E-49	41	RGS conduit	0.00	534.55	Pull rope	Soft-Fiber Polyester
1126	E-49	41	RGS conduit	0.00	534.55	Pull rope	Soft-Fiber Polyester
1127	E-50	41	RGS conduit	0.00	534.55	Pull rope	Soft-Fiber Polyester
1128	E-50	41	RGS conduit	0.00	534.55	Pull rope	Soft-Fiber Polyester
1129	E-50	41	RGS conduit	0.00	534.55	Pull rope	Soft-Fiber Polyester
1130	E-50, E-51	41	RGS conduit	0.00	534.55	Pull rope	Soft-Fiber Polyester
1131	E-50, E-51	41	RGS conduit	0.00	534.55	Pull rope	Soft-Fiber Polyester
1347	E-46	41	RGS conduit	0.00	534.55	Pull rope	Soft-Fiber Polyester
1348	E-46	41	RGS conduit	0.00	534.55	Pull rope	Soft-Fiber Polyester
1349	~~E-48~~ E-66A	41	RGS conduit	0.00	534.55	Pull rope	Soft-Fiber Polyester
1350	E-46, E-66A	41	RGS conduit	212.85	534.55	A-3001-2	3 + 1 gnd #6,#8, 600 V, RHH/RHW insulation
						Pull rope	Soft-Fiber Polyester
1351	E-46	41	RGS conduit	212.85	534.55	Pull rope	Soft-Fiber Polyester
						A-3001-2	3 + 1 gnd #6,#8, 600 V, RHH/RHW insulation
1352	E-46	41	RGS conduit	212.85	534.55	A-3001-2	3 + 1 gnd #6,#8, 600 V, RHH/RHW insulation
						Pull rope	Soft-Fiber Polyester
1353	E-46	41	RGS conduit	212.85	534.55	A-3001-2	3 + 1 gnd #6,#8, 600 V, RHH/RHW insulation
						Pull rope	Soft-Fiber Polyester
1354	E-46	41	RGS conduit	212.85	534.55	Pull rope	Soft-Fiber Polyester
						A-3001-2	3 + 1 gnd #6,#8, 600 V, RHH/RHW insulation
1355	E-46	41	RGS conduit	212.85	534.55	Pull rope	Soft-Fiber Polyester
						A-3001-2	3 + 1 gnd #6,#8, 600 V, RHH/RHW insulation
1356	E-46	41	RGS conduit	212.85	534.55	Pull rope	Soft-Fiber Polyester
						A-3001-2	3 + 1 gnd #6,#8, 600 V, RHH/RHW insulation
1357	E-46	41	RGS conduit	212.85	534.55	A-3001-2	3 + 1 gnd #6,#8, 600 V, RHH/RHW insulation
						Pull rope	Soft-Fiber Polyester
1358	E-47	41	RGS conduit	212.85	534.55	Pull rope	Soft-Fiber Polyester
						A-3001-2	3 + 1 gnd #6,#8, 600 V, RHH/RHW insulation
1359	E-47	41	RGS conduit	212.85	534.55	Pull rope	Soft-Fiber Polyester
						A-3002-2	3 + 1 gnd #6,#8, 600 V, RHH/RHW insulation
1360	E-47	41	RGS conduit	212.85	534.55	Pull rope	Soft-Fiber Polyester
						A-3002-2	3 + 1 gnd #6,#8, 600 V, RHH/RHW insulation

For continuation, see next sheet.

SKETCH No. CCR-81-GK-E-402 R0
R. GARCIA 5/28/09

CONDUIT AND TRAY SCHEDULE

E-402

STATE OF CALIFORNIA - DEPARTMENT OF TRANSPORTATION
Caltrans

DESIGN OVERSIGHT
BEHZAD GOLEMOHAMMADI

CALCULATED/DESIGNED BY PBP
CHECKED BY AB
DATE 8/02 REVISED BY
8/02 DATE REVISED

FOR REDUCED PLANS ORIGINAL 0 20 40 60 80

DGN FILE =>T:\1310\MS\pse\SAS Struc\CCO\SAS CC042\04-0120f1_0357R01.dgn

DATE PLOTTED => 4/4/2008

DIST	COUNTY	ROUTE	KILOMETER POST TOTAL PROJECT	SHEET No	TOTAL SHEETS
04	SF	80	13.2/13.9	358 R1	1204

REGISTERED ELECTRICAL ENGINEER 12/19/02 DATE

12-6-04
PLANS APPROVAL DATE

PB POWER, inc.
A Parsons Brinckerhoff Company
303 Second St., Suite 700N
San Francisco, CA 94107-1317

REGISTERED PROFESSIONAL ENGINEER JENS ERLINGSSON No. 8249 Exp. 9/30/06 ELECTRICAL STATE OF CALIFORNIA

The State of California or its officers or agents shall not be responsible for the accuracy or completeness of electronic copies of this plan sheet.

Caltrans now has a web site! To get to the web site, go to http://www.dot.ca.gov

Caltrans Metric

REGISTERED PROFESSIONAL ENGINEER S. A. ESTOQUE, JR. No. E-10151 Exp. 12/31/2008 ELECTRICAL STATE OF CALIFORNIA

FOR REVISION ONLY

REQUEST FOR INFORMATION NOT ADDRESSED IN THIS CCO REMAIN IN FORCE

MARK	DATE	DESCRIPTIONS	BY	CH'D	CCO#
1	03/04/08	BARRIER MODIFICATIONS	JS BM	RG SE	44

REVISIONS

CONTRACT CHANGE ORDER NO._____
SHEET_____ OF_____

CONDUIT DATA

Conduit No	Reference	Size	Type	Total Fill (mm²)	Allowable Fill (mm²)	Included Cable No.	Conductor Type
1361	E-47	41	RGS conduit	212.85	534.55	Pull rope	Soft-Fiber Polyester
						A-3002-2	3 + 1 gnd #6,#8, 600 V, RHH/RHW insulation
1362	E-47	41	RGS conduit	212.85	534.55		
						Pull rope	Soft-Fiber Polyester
						A-3002-2	3 + 1 gnd #6,#8, 600 V, RHH/RHW insulation
1363	E-47	41	RGS conduit	212.85	534.55	Pull rope	Soft-Fiber Polyester
						A-3002-2	3 + 1 gnd #6,#8, 600 V, RHH/RHW insulation
1364	E-47	41	RGS conduit	0.00	534.55	Pull rope	Soft-Fiber Polyester
1365	E-47	41	RGS conduit	212.85	534.55	A-3003-2	3 + 1 gnd #6,#8, 600 V, RHH/RHW insulation
						Pull rope	Soft-Fiber Polyester
1366	E-47	41	RGS conduit	440.31	534.55	A-3003-2	3 + 1 gnd #6,#8, 600 V, RHH/RHW insulation
						UP106-1	1-2/C + gnd #8, 600 V, EPR insulation
						Pull rope	Soft-Fiber Polyester
1367	E-47	41	RGS conduit	440.31	534.55	Pull rope	Soft-Fiber Polyester
						A-3003-2	3 + 1 gnd #6,#8, 600 V, RHH/RHW insulation
						UP106-1	1-2/C + gnd #8, 600 V, EPR insulation
1368	E-47	41	RGS conduit	440.31	534.55	A-3003-2	3 + 1 gnd #6,#8, 600 V, RHH/RHW insulation
						Pull rope	Soft-Fiber Polyester
						UP106-1	1-2/C + gnd #8, 600 V, EPR insulation
1369	E-48	41	RGS conduit	440.31	534.55	A-3003-2	3 + 1 gnd #6,#8, 600 V, RHH/RHW insulation
						UP106-1	1-2/C + gnd #8, 600 V, EPR insulation
						Pull rope	Soft-Fiber Polyester
1370	E-48	41	RGS conduit	227.46	534.55	Pull rope	Soft-Fiber Polyester
						UP106-1	1-2/C + gnd #8, 600 V, EPR insulation
1371	E-48	41	RGS conduit	212.85	534.55	A-3004-2	3 + 1 gnd #6,#8, 600 V, RHH/RHW insulation
						Pull rope	Soft-Fiber Polyester
1372	E-48	41	RGS conduit	212.85	534.55	A-3004-2	3 + 1 gnd #6,#8, 600 V, RHH/RHW insulation
						Pull rope	Soft-Fiber Polyester
1373	E-48	41	RGS conduit	212.85	534.55	Pull rope	Soft-Fiber Polyester
						A-3004-2	3 + 1 gnd #6,#8, 600 V, RHH/RHW insulation
1374	E-48	41	RGS conduit	212.85	534.55	Pull rope	Soft-Fiber Polyester
						A-3004-2	3 + 1 gnd #6,#8, 600 V, RHH/RHW insulation
1375	E-48	41	RGS conduit	212.85	534.55	Pull rope	Soft-Fiber Polyester
						A-3004-2	3 + 1 gnd #6,#8, 600 V, RHH/RHW insulation
1376	E-48	41	RGS conduit	0.00	534.55	Pull rope	Soft-Fiber Polyester
1377	E-48	41	RGS conduit	212.85	534.55	A-3005-2	3 + 1 gnd #6,#8, 600 V, RHH/RHW insulation
						Pull rope	Soft-Fiber Polyester
1378	E-48	41	RGS conduit	212.85	534.55	Pull rope	Soft-Fiber Polyester
						A-3005-2	3 + 1 gnd #6,#8, 600 V, RHH/RHW insulation
1379	E-48	41	RGS conduit	212.85	534.55	Pull rope	Soft-Fiber Polyester
						A-3005-2	3 + 1 gnd #6,#8, 600 V, RHH/RHW insulation
1380	E-49	41	RGS conduit	212.85	534.55	Pull rope	Soft-Fiber Polyester
						A-3005-2	3 + 1 gnd #6,#8, 600 V, RHH/RHW insulation
1381	E-49	41	RGS conduit	212.85	534.55	Pull rope	Soft-Fiber Polyester
						A-3005-2	3 + 1 gnd #6,#8, 600 V, RHH/RHW insulation
1382	E-49	41	RGS conduit	227.46	534.55	Pull rope	Soft-Fiber Polyester
						UP108-2	1-2/C + gnd #8, 600 V, EPR insulation
1383	E-49	41	RGS conduit	212.85	534.55	A-3006-2	3 + 1 gnd #6,#8, 600 V, RHH/RHW insulation
						Pull rope	Soft-Fiber Polyester
1384	E-49	41	RGS conduit	212.85	534.55	A-3006-2	3 + 1 gnd #6,#8, 600 V, RHH/RHW insulation
						Pull rope	Soft-Fiber Polyester
1385	E-49	41	RGS conduit	212.85	534.55	Pull rope	Soft-Fiber Polyester
						A-3006-2	3 + 1 gnd #6,#8, 600 V, RHH/RHW insulation
1386	E-49	41	RGS conduit	212.85	534.55	A-3006-2	3 + 1 gnd #6,#8, 600 V, RHH/RHW insulation
						Pull rope	Soft-Fiber Polyester

CONDUIT DATA

Conduit No	Reference	Size	Type	Total Fill (mm²)	Allowable Fill (mm²)	Included Cable No.	Conductor Type
1387	E-49	41	RGS conduit	212.85	534.55	A-3006-2	3 + 1 gnd #6,#8, 600 V, RHH/RHW insulation
						Pull rope	Soft-Fiber Polyester
1388	E-49	41	RGS conduit	212.85	534.55	A-3006-2	3 + 1 gnd #6,#8, 600 V, RHH/RHW insulation
						Pull rope	Soft-Fiber Polyester
1389	E-49	41	RGS conduit	212.85	534.55	Pull rope	Soft-Fiber Polyester
						A-3006-2	3 + 1 gnd #6,#8, 600 V, RHH/RHW insulation
1390	E-49	41	RGS conduit	212.85	534.55	Pull rope	Soft-Fiber Polyester
						A-3006-2	3 + 1 gnd #6,#8, 600 V, RHH/RHW insulation
1391	E-49	41	RGS conduit	0.00	534.55	Pull rope	Soft-Fiber Polyester
1392	E-50	41	RGS conduit	0.00	534.55	Pull rope	Soft-Fiber Polyester
1393	E-50	41	RGS conduit	0.00	534.55	Pull rope	Soft-Fiber Polyester
1394	E-50	41	RGS conduit	0.00	534.55	Pull rope	Soft-Fiber Polyester
1395	E-50	41	RGS conduit	0.00	534.55	Pull rope	Soft-Fiber Polyester
1396	E-50	41	RGS conduit	0.00	534.55	Pull rope	Soft-Fiber Polyester
1397	E-50	41	RGS conduit	0.00	534.55	Pull rope	Soft-Fiber Polyester
1398	E-50	41	RGS conduit	0.00	534.55	Pull rope	Soft-Fiber Polyester
1399	E-50	41	RGS conduit	0.00	534.55	Pull rope	Soft-Fiber Polyester
1447	E-46	41	RGS conduit	0.00	534.55	Pull rope	Soft-Fiber Polyester
1448	E-46	41	RGS conduit	0.00	534.55	Pull rope	Soft-Fiber Polyester
1449	E-46 E-66A	41	RGS conduit	0.00	534.55	Pull rope	Soft-Fiber Polyester
1450	E-46 E-66A	41	RGS conduit	0.00	534.55	Pull rope	Soft-Fiber Polyester
1451	E-46	41	RGS conduit	0.00	534.55	Pull rope	Soft-Fiber Polyester
1452	E-46	41	RGS conduit	0.00	534.55	Pull rope	Soft-Fiber Polyester
1453	E-46	41	RGS conduit	0.00	534.55	Pull rope	Soft-Fiber Polyester
1454	E-46	41	RGS conduit	0.00	534.55	Pull rope	Soft-Fiber Polyester
1455	E-46	41	RGS conduit	0.00	534.55	Pull rope	Soft-Fiber Polyester
1456	E-46	41	RGS conduit	0.00	534.55	Pull rope	Soft-Fiber Polyester

CCR-81

For continuation, see next sheet.

SKETCH No. CCR-81-SK-E-403 R0
R. GARCIA 5/28/09

CONDUIT AND TRAY SCHEDULE

E-403

STATE OF CALIFORNIA - DEPARTMENT OF TRANSPORTATION
Caltrans

DESIGN OVERSIGHT
BEHZAD GOLEMOHAMMADI

CALCULATED/DESIGNED BY PBP
CHECKED BY AB
DATE 8/02
REVISED BY
DATE REVISED

FOR REDUCED PLANS ORIGINAL

DGN FILE =>T:\13103\MS\pce\SAS Struc\CCO\SAS CC044\04-0120f1_0358R01.dgn

DATE PLOTTED => 5/22/2008
LAST REVISION

DIST	COUNTY	ROUTE	KILOMETER POST TOTAL PROJECT	SHEET No	TOTAL SHEETS
04	SF	80	13.2/13.9	359R1	1204

REGISTERED ELECTRICAL ENGINEER 12/19/02 DATE

12-6-04
PLANS APPROVAL DATE

PB POWER, Inc.
A Parsons Brinckerhoff Company
303 Second St., Suite 700N
San Francisco, CA 94107-1317

REGISTERED PROFESSIONAL ENGINEER JENS ERLINGSSON No. 8249 Exp. 9/30/06 ELECTRICAL STATE OF CALIFORNIA

The State of California or its officers or agents shall not be responsible for the accuracy or completeness of electronic copies of this plan sheet.

Caltrans now has a web site! To get to the web site, go to http://www.dot.ca.gov

Caltrans Metric

REQUEST FOR INFORMATION NOT ADDRESSED IN THIS CCO REMAIN IN FORCE

MARK	DATE	DESCRIPTIONS	BY	CH'D	CCO#
1	02/19/08	ELECTRICAL MODIFICATIONS	MP EL	RR	42

REVISIONS

CONTRACT CHANGE ORDER NO. _____
SHEET _____ OF _____

REGISTERED PROFESSIONAL ENGINEER MARVELL FUMIO TAKAI No. E 8651 Exp. 9/30/2008 ELECTRICAL STATE OF CALIFORNIA

FOR REVISION ONLY

CONDUIT DATA

Conduit No	Reference	Size	Type	Total Fill (mm²)	Allowable Fill (mm²)	Included Cable No.	Conductor Type
1457	E-46	41	RGS conduit	0.00	534.55	Pull rope	Soft-Fiber Polyester
1458	E-47	41	RGS conduit	0.00	534.55	Pull rope	Soft-Fiber Polyester
1459	E-47	41	RGS conduit	0.00	534.55	Pull rope	Soft-Fiber Polyester
1460	E-47	41	RGS conduit	0.00	534.55	Pull rope	Soft-Fiber Polyester
1461	E-47	41	RGS conduit	0.00	534.55	Pull rope	Soft-Fiber Polyester
1462	E-47	41	RGS conduit	0.00	534.55	Pull rope	Soft-Fiber Polyester
1463	E-47	41	RGS conduit	0.00	534.55	Pull rope	Soft-Fiber Polyester
1464	E-47	41	RGS conduit	0.00	534.55	Pull rope	Soft-Fiber Polyester
1465	E-47	41	RGS conduit	324.29	534.55	A-3009-3	1-3/C + gnd #6, 600 V, EPR insulation
						Pull rope	Soft-Fiber Polyester
1466	E-47	41	RGS conduit	0.00	534.55	Pull rope	Soft-Fiber Polyester
1467	E-47	41	RGS conduit	324.29	534.55	A-3010-3	1-3/C #6 + gnd 600 V, RHH/RHW insulation
						Pull rope	Soft-Fiber Polyester
1468	E-47	41	RGS conduit	0.00	534.55	Pull rope	Soft-Fiber Polyester
1469	E-48	41	RGS conduit	0.00	534.55	Pull rope	Soft-Fiber Polyester
1470	E-48	41	RGS conduit	0.00	534.55	Pull rope	Soft-Fiber Polyester
1471	E-48	41	RGS conduit	0.00	534.55	Pull rope	Soft-Fiber Polyester
1472	E-48	41	RGS conduit	0.00	534.55	Pull rope	Soft-Fiber Polyester
1473	E-48	41	RGS conduit	0.00	534.55	Pull rope	Soft-Fiber Polyester
1474	E-48	41	RGS conduit	0.00	534.55	Pull rope	Soft-Fiber Polyester
1475	E-48	41	RGS conduit	0.00	534.55	Pull rope	Soft-Fiber Polyester
1476	E-48	41	RGS conduit	0.00	534.55	Pull rope	Soft-Fiber Polyester
1477	E-48	41	RGS conduit	0.00	534.55	Pull rope	Soft-Fiber Polyester
1478	E-48	41	RGS conduit	0.00	534.55	Pull rope	Soft-Fiber Polyester
1479	E-48	41	RGS conduit	0.00	534.55	Pull rope	Soft-Fiber Polyester
1481	E-49	41	RGS conduit	0.00	534.55	Pull rope	Soft-Fiber Polyester
1482	E-49	41	RGS conduit	0.00	534.55	Pull rope	Soft-Fiber Polyester
1483	E-49	41	RGS conduit	0.00	534.55	Pull rope	Soft-Fiber Polyester
1484	E-49	41	RGS conduit	0.00	534.55	Pull rope	Soft-Fiber Polyester
1485	E-49	41	RGS conduit	0.00	534.55	Pull rope	Soft-Fiber Polyester
1486	E-49	41	RGS conduit	0.00	534.55	Pull rope	Soft-Fiber Polyester
1487	E-49	41	RGS conduit	0.00	534.55	Pull rope	Soft-Fiber Polyester
1488	E-49	41	RGS conduit	0.00	534.55	Pull rope	Soft-Fiber Polyester
1489	E-49	41	RGS conduit	0.00	534.55	Pull rope	Soft-Fiber Polyester
1490	E-49	41	RGS conduit	0.00	534.55	Pull rope	Soft-Fiber Polyester
1491	E-49	41	RGS conduit	0.00	534.55	Pull rope	Soft-Fiber Polyester
1492	E-50	41	RGS conduit	0.00	534.55	Pull rope	Soft-Fiber Polyester
1493	E-50	41	RGS conduit	0.00	534.55	Pull rope	Soft-Fiber Polyester
1494	E-50	41	RGS conduit	0.00	534.55	Pull rope	Soft-Fiber Polyester

CONDUIT DATA

Conduit No	Reference	Size	Type	Total Fill (mm²)	Allowable Fill (mm²)	Included Cable No.	Conductor Type
1495	E-50	41	RGS conduit	0.00	534.55	Pull rope	Soft-Fiber Polyester
1496	E-50	41	RGS conduit	0.00	534.55	Pull rope	Soft-Fiber Polyester
1497	E-50	41	RGS conduit	0.00	534.55	Pull rope	Soft-Fiber Polyester
1498	E-50	41	RGS conduit	0.00	534.55	Pull rope	Soft-Fiber Polyester
1499	E-50	41	RGS conduit	0.00	534.55	Pull rope	Soft-Fiber Polyester
1513	E-46, E-66A	41	RGS conduit	0.00	534.55	Pull rope	Soft-Fiber Polyester
1514	E-46	41	RGS conduit	0.00	534.55	Pull rope	Soft-Fiber Polyester
1515	E-46, E-47	41	RGS conduit	0.00	534.55	Pull rope	Soft-Fiber Polyester
1516	E-47	41	RGS conduit	0.00	534.55	Pull rope	Soft-Fiber Polyester
1517	E-47	41	RGS conduit	0.00	534.55	Pull rope	Soft-Fiber Polyester
1518	E-47	41	RGS conduit	0.00	534.55	Pull rope	Soft-Fiber Polyester
1519	E-47, E-48	41	RGS conduit	0.00	534.55	Pull rope	Soft-Fiber Polyester
1520	E-48	41	RGS conduit	0.00	534.55	Pull rope	Soft-Fiber Polyester
1521	E-48	41	RGS conduit	0.00	534.55	Pull rope	Soft-Fiber Polyester
1522	E-48	41	RGS conduit	0.00	534.55	Pull rope	Soft-Fiber Polyester
1523	E-49	41	RGS conduit	0.00	534.55	Pull rope	Soft-Fiber Polyester
1524	E-49	41	RGS conduit	0.00	534.55	Pull rope	Soft-Fiber Polyester
1525	E-49	41	RGS conduit	0.00	534.55	Pull rope	Soft-Fiber Polyester
1526	E-49	41	RGS conduit	0.00	534.55	Pull rope	Soft-Fiber Polyester
1527	E-50	41	RGS conduit	0.00	534.55	Pull rope	Soft-Fiber Polyester
1528	E-50	41	RGS conduit	0.00	534.55	Pull rope	Soft-Fiber Polyester
1529	E-50	41	RGS conduit	0.00	534.55	Pull rope	Soft-Fiber Polyester
1530	E-50	41	RGS conduit	0.00	534.55	Pull rope	Soft-Fiber Polyester
1531	E-51	41	RGS conduit	0.00	534.55	Pull rope	Soft-Fiber Polyester
~~1731~~							
1732	E-46, E-66A	41	RGS conduit	0.00	534.55	Pull rope	Soft-Fiber Polyester
1733	E-46	41	RGS conduit	0.00	534.55	Pull rope	Soft-Fiber Polyester
1734	E-46	41	RGS conduit	0.00	534.55	Pull rope	Soft-Fiber Polyester

CCR-81

For continuation, see next sheet.

SKETCH No. CCR-81-SK-E-404 R0
R. GARCIA 5/28/09

CONDUIT AND TRAY SCHEDULE

E-404

STATE OF CALIFORNIA - DEPARTMENT OF TRANSPORTATION
Caltrans

DESIGN OVERSIGHT
BEHZAD GOLEMOHAMMADI

CALCULATED/DESIGNED BY PBP
CHECKED BY AB
DATE 8/02 REVISED BY
8/02 DATE REVISED

LAST REVISION
DATE PLOTTED => 4/4/2008

FOR REDUCED PLANS ORIGINAL 0 40 80

DGN FILE =>T:\1\103\WS\pse\SAS STPOB\CCO\SAS_CC042\04-0120f1_0359R01.dgn

DIST	COUNTY	ROUTE	KILOMETER POST TOTAL PROJECT	SHEET No	TOTAL SHEETS
04	SF	80	13.2/13.9	360 R2	1204

REGISTERED ELECTRICAL ENGINEER 12/19/02 DATE

12-6-04
PLANS APPROVAL DATE

REGISTERED PROFESSIONAL ENGINEER JENS ERLINGSSON No. 8249 Exp. 9/30/06 ELECTRICAL STATE OF CALIFORNIA

PB POWER, Inc.
A Parsons Brinckerhoff Company
303 Second St., Suite 700N
San Francisco, CA 94107-1317

The State of California or its officers or agents shall not be responsible for the accuracy or completeness of electronic copies of this plan sheet.

Caltrans now has a web site! To get to the web site, go to http://www.dot.ca.gov

Caltrans Metric

REGISTERED PROFESSIONAL ENGINEER S. A. ESTOQUE, JR. No. E-10151 Exp. 12/31/2008 ELECTRICAL STATE OF CALIFORNIA

FOR REVISION ONLY

REQUEST FOR INFORMATION NOT ADDRESSED IN THIS CCO REMAIN IN FORCE

MARK	DATE	DESCRIPTIONS	BY	CH'D	CCO#
2	03/04/08	BARRIER MODIFICATIONS	JS BM	RG SE	44
1	02/19/08	ELECTRICAL MODIFICATIONS	MP EL	RR	42

REVISIONS

CONTRACT CHANGE ORDER NO._____
SHEET_____ OF_____

CONDUIT DATA

Conduit No	Reference	Size	Type	Total Fill (mm²)	Allowable Fill (mm²)	Included Cable No.	Conductor Type
1735	E-46	41	RGS conduit	0.00	534.55	Pull rope	Soft-Fiber Polyester
1736	E-46	41	RGS conduit	0.00	534.55	Pull rope	Soft-Fiber Polyester
1737	E-47	41	RGS conduit	0.00	534.55	Pull rope	Soft-Fiber Polyester
1738	E-47	41	RGS conduit	126.88	534.55	Pull rope	Soft-Fiber Polyester
						UP105-3	1-2/C + gnd #10, 600 V, EPR insulation
1739	E-47	41	RGS conduit	126.88	534.55	UP105-3	1-2/C + gnd #10, 600 V, EPR insulation
						Pull rope	Soft-Fiber Polyester
1740	E-47	41	RGS conduit	126.88	534.55	UP105-3	1-2/C + gnd #10, 600 V, EPR insulation
						Pull rope	Soft-Fiber Polyester
1741	E-47	41	RGS conduit	126.88	534.55	UP105-3	1-2/C + gnd #10, 600 V, EPR insulation
						Pull rope	Soft-Fiber Polyester
1742	E-47	41	RGS conduit	0.00	534.55	Pull rope	Soft-Fiber Polyester
1743	E-47	41	RGS conduit	0.00	534.55	Pull rope	Soft-Fiber Polyester
1744	E-47	41	RGS conduit	0.00	534.55	Pull rope	Soft-Fiber Polyester
1745	E-47	41	RGS conduit	440.31	534.55	UP106-3	1-2/C + gnd #8, 600 V, EPR insulation
						A-3010-2	3 + 1 gnd #6,#8, 600 V, RHH/RHW insulation
						Pull rope	Soft-Fiber Polyester
1746	E-48	41	RGS conduit	440.31	534.55	Pull rope	Soft-Fiber Polyester
						A-3010-2	3 + 1 gnd #6,#8, 600 V, RHH/RHW insulation
						UP106-3	1-2/C + gnd #8, 600 V, EPR insulation
1747	E-48	41	RGS conduit	0.00	534.55	Pull rope	Soft-Fiber Polyester
1748	E-48	41	RGS conduit	0.00	534.55	Pull rope	Soft-Fiber Polyester
1749	E-48	41	RGS conduit	0.00	534.55	Pull rope	Soft-Fiber Polyester
1750	E-48	41	RGS conduit	0.00	534.55	Pull rope	Soft-Fiber Polyester
1751	E-49	41	RGS conduit	0.00	534.55	Pull rope	Soft-Fiber Polyester
1752	E-49	41	RGS conduit	0.00	534.55	Pull rope	Soft-Fiber Polyester
1753	E-49	41	RGS conduit	0.00	534.55	Pull rope	Soft-Fiber Polyester
1754	E-49	41	RGS conduit	0.00	534.55	Pull rope	Soft-Fiber Polyester
1755	E-49	41	RGS conduit	0.00	534.55	Pull rope	Soft-Fiber Polyester
1756	E-50	41	RGS conduit	0.00	534.55	Pull rope	Soft-Fiber Polyester
1757	E-50	41	RGS conduit	0.00	534.55	Pull rope	Soft-Fiber Polyester
1758	E-50	41	RGS conduit	0.00	534.55	Pull rope	Soft-Fiber Polyester
1759	E-50	41	RGS conduit	0.00	534.55	Pull rope	Soft-Fiber Polyester
1760	E-50	41	RGS conduit	49.21	534.55	Pull rope	Soft-Fiber Polyester
						UP108-3A	2 + 1 gnd #12,#12, 600 V, RHH/RHW insulation
1761	E-50	41	RGS conduit	49.21	534.55	UP108-3A	2 + 1 gnd #12,#12, 600 V, RHH/RHW insulation
						Pull rope	Soft-Fiber Polyester
1762	E-50	41	RGS conduit	373.50	534.55	1106	1-3/C + gnd #6, 600 V, EPR insulation
						UP108-3A	2 + 1 gnd #12,#12, 600 V, RHH/RHW insulation
						Pull rope	Soft-Fiber Polyester
1763	E-51	41	RGS conduit	324.29	534.55	Pull rope	Soft-Fiber Polyester
						1106	1-3/C + gnd #6, 600 V, EPR insulation
1764	E-51	41	RGS conduit	0.00	534.55	Pull rope	Soft-Fiber Polyester
1765	E-51	41	RGS conduit	324.29	534.55	1106	1-3/C + gnd #6, 600 V, EPR insulation
						Pull rope	Soft-Fiber Polyester

CONDUIT DATA

Conduit No	Reference	Size	Type	Total Fill (mm²)	Allowable Fill (mm²)	Included Cable No.	Conductor Type
1766	E-79	53	RGS-PVC coated conduit	754.18	879.42	Pull rope	Soft-Fiber Polyester
						1115	1-3/C + gnd #1/0, 600 V, EPR insulation
1767	E-79	53	RGS-PVC coated conduit	147.25	879.42	Pull rope	Soft-Fiber Polyester
						1115-2	1-3/C #16, 600 V, EPR insulation
						1115-1	1-3/C #14, 600 V, EPR insulation
1768	E-120, E-101	78	RGS-PVC coated conduit	882.89	1935.24	Pull rope	Soft-Fiber Polyester
						1117	1-3/C + gnd #2/0, 600 V, EPR insulation
1769	E-120, E-101	27	RGS-PVC coated conduit	147.25	229.03	1117-2	1-3/C #16, 600 V, EPR insulation
						Pull rope	Soft-Fiber Polyester
						1117-1	1-3/C #14, 600 V, EPR insulation
~~1831~~							
		CCR-81					
1832	E-46, E-66A	41	RGS conduit	474.91	534.55	A-1035-1	1-3/C + gnd #6, 600V, EPR insulation
						UP104-3A	2 + 1gnd #12,#12, 600 V, RHH/RHW insulation
						Pull rope	Soft-Fiber Polyester
						S-1031-1	1-3/C + gnd #2, 600V, EPR insulation
1833	E-46	41	RGS conduit	474.91	534.55	S-1031-1	1-3/C + gnd #2, 600V, EPR insulation
						A-1035-1	1-3/C + gnd #6, 600V, EPR insulation
						UP104-3A	2 + 1gnd #12,#12, 600 V, RHH/RHW insulation
						Pull rope	Soft-Fiber Polyester
1834	E-46	41	RGS conduit	474.91	534.55	UP104-3A	2 + 1 gnd #12,#12, 600 V, RHH/RHW insulation
						A-1035-1	1-3/C + gnd #6, 600V, EPR insulation
						Pull rope	Soft-Fiber Polyester
						S-1031-1	1-3/C + gnd #2, 600V, EPR insulation
1835	E-46	41	RGS conduit	0.00	534.55	Pull rope	Soft-Fiber Polyester
1836	E-46, E-47	41	RGS conduit	0.00	534.55	Pull rope	Soft-Fiber Polyester
1837	E-47	41	RGS conduit	0.00	534.55	Pull rope	Soft-Fiber Polyester
1838	E-47	41	RGS conduit	212.85	534.55	A-3009-2	3 + 1 gnd #6,#8, 600 V, RHH/RHW insulation
						Pull rope	Soft-Fiber Polyester
1839	E-47	41	RGS conduit	212.85	534.55	Pull rope	Soft-Fiber Polyester
						A-3009-2	3 + 1 gnd #6,#8, 600 V, RHH/RHW insulation
1840	E-47	41	RGS conduit	212.85	534.55	~~A-3009-2~~	~~3 + 1 gnd #6,#8, 600 V, RHH/RHW insulation~~
				2	2	~~Pull rope~~	~~Soft-Fiber Polyester~~
1841	E-47	41	RGS conduit	212.85	534.55		
				2	2	Pull rope	Soft-Fiber Polyester
						A-3009-2	3 + 1 gnd #6,#8, 600 V, RHH/RHW insulation
1842	E-47	41	RGS conduit	212.85	534.55	Pull rope	Soft-Fiber Polyester
						A-3009-2	3 + 1 gnd #6,#8, 600 V, RHH/RHW insulation

For continuation, see next sheet.

SKETCH No. CCR-81-SK-E-405 R0
R. GARCIA 5/28/09

CONDUIT AND TRAY SCHEDULE

E-405

STATE OF CALIFORNIA - DEPARTMENT OF TRANSPORTATION
Caltrans

DESIGN OVERSIGHT: BEHZAD GOLEMOHAMMADI

CALCULATED/DESIGNED BY: PBP | DATE 8/02
CHECKED BY: AB | 8/02

REVISED BY | DATE REVISED

FOR REDUCED PLANS ORIGINAL 0 20 40 60 80

DGN FILE =\\...\CCO\SAS CC044\04-0120f1_0360R02.dgn

DATE PLOTTED => 5/22/2008

LAST REVISION

DIST	COUNTY	ROUTE	KILOMETER POST TOTAL PROJECT	SHEET No	TOTAL SHEETS
04	SF	80	13.2/13.9	368 R1	1204

REGISTERED ELECTRICAL ENGINEER 12/19/02 DATE

12-6-04
PLANS APPROVAL DATE

REGISTERED PROFESSIONAL ENGINEER JENS ERLINGSSON No. 8249 Exp. 9/30/06 ELECTRICAL STATE OF CALIFORNIA

PB POWER, Inc.
A Parsons Brinckerhoff Company
303 Second St., Suite 700N
San Francisco, CA 94107-1317

The State of California or its officers or agents shall not be responsible for the accuracy or completeness of electronic copies of this plan sheet.

Caltrans now has a web site! To get to the web site, go to: http://www.dot.ca.gov

Caltrans Metric

REQUEST FOR INFORMATION NOT ADDRESSED IN THIS CCO REMAIN IN FORCE

MARK	DATE	DESCRIPTIONS	BY	CH'D	CCO#
1	03/04/08	BARRIER MODIFICATIONS	JS BM	RG SE	44

REVISIONS

CONTRACT CHANGE ORDER NO._____
SHEET_____ OF_____

FOR REVISION ONLY

REGISTERED PROFESSIONAL ENGINEER S. A. ESTOOLE, JR. No. E-10151 Exp. 12/31/2008 ELECTRICAL STATE OF CALIFORNIA

CONDUIT DATA

Conduit No	Reference	Size	Type	Total Fill (mm²)	Allowable Fill (mm²)	Included Cable No.	Conductor Type
2377	E-136	41	RGS conduit	212.85	534.55	LP220-2,4A	3 + 1 gnd #6,#8, 600 V, RHH/RHW insulation
2378	E-136	41	RGS conduit	212.85	534.55	LP220-2,4A	3 + 1 gnd #6,#8, 600 V, RHH/RHW insulation
2379	E-136	41	RGS conduit	212.85	534.55	LP220-2,4A	3 + 1 gnd #6,#8, 600 V, RHH/RHW insulation
2380	E-136	41	RGS conduit	212.85	534.55	LP220-6,8A	3 + 1 gnd #6,#8, 600 V, RHH/RHW insulation
2381	E-136	41	RGS conduit	212.85	534.55	LP220-6,8A	3 + 1 gnd #6,#8, 600 V, RHH/RHW insulation
2382	E-136	41	RGS conduit	212.85	534.55	LP220-6,8A	3 + 1 gnd #6,#8, 600 V, RHH/RHW insulation
2383	E-136	41	RGS conduit	212.85	534.55	LP220-6,8A	3 + 1 gnd #6,#8, 600 V, RHH/RHW insulation
2384	E-136	41	RGS conduit	212.85	534.55	LP220-6,8A	3 + 1 gnd #6,#8, 600 V, RHH/RHW insulation
2385	E-136	41	RGS conduit	0.00	534.55	Pull rope	Soft-Fiber Polyester
2386	E-136	41	RGS conduit	212.85	534.55	LP221-2,4A	3 + 1 gnd #6,#8, 600 V, RHH/RHW insulation
2387	E-137	41	RGS conduit	212.85	534.55	LP221-2,4A	3 + 1 gnd #6,#8, 600 V, RHH/RHW insulation
2388	E-137	41	RGS conduit	212.85	534.55	LP221-2,4A	3 + 1 gnd #6,#8, 600 V, RHH/RHW insulation
2389	E-137	41	RGS conduit	212.85	534.55	LP221-6,8A	3 + 1 gnd #6,#8, 600 V, RHH/RHW insulation
2390	E-137	41	RGS conduit	212.85	534.55	LP221-6,8A	3 + 1 gnd #6,#8, 600 V, RHH/RHW insulation
2391	E-137	41	RGS conduit	212.85	534.55	LP221-6,8A	3 + 1 gnd #6,#8, 600 V, RHH/RHW insulation
2392	E-137	41	RGS conduit	212.85	534.55	LP221-6,8A	3 + 1 gnd #6,#8, 600 V, RHH/RHW insulation
2393	E-137	41	RGS conduit	212.85	534.55	LP221-6,8A	3 + 1 gnd #6,#8, 600 V, RHH/RHW insulation
2394	E-137	41	RGS conduit	212.85	534.55	LP221-6,8A	3 + 1 gnd #6,#8, 600 V, RHH/RHW insulation
2395	E-137	41	RGS conduit	212.85	534.55	LP221-6,8A	3 + 1 gnd #6,#8, 600 V, RHH/RHW insulation
2396	E-137	41	RGS conduit	212.85	534.55	LP222-2,4A	3 + 1 gnd #6,#8, 600 V, RHH/RHW insulation
2397	E-138	41	RGS conduit	212.85	534.55	LP222-2,4A	3 + 1 gnd #6,#8, 600 V, RHH/RHW insulation
2398	E-138	41	RGS conduit	212.85	534.55	LP222-2,4A	3 + 1 gnd #6,#8, 600 V, RHH/RHW insulation
2399	E-138	41	RGS conduit	212.85	534.55	LP222-2,4A	3 + 1 gnd #6,#8, 600 V, RHH/RHW insulation
2401	E-138	41	RGS conduit	212.85	534.55	Pull rope	Soft-Fiber Polyester
						A-2013-2	3 + 1 gnd #6,#8, 600 V, RHH/RHW insulation
2426	E-135	41	RGS conduit	212.85	534.55	LP219-2,4A	3 + 1 gnd #6,#8, 600 V, RHH/RHW insulation
						Pull rope	Soft-Fiber Polyester
2427	E-135	41	RGS conduit	212.85	534.55	Pull rope	Soft-Fiber Polyester
						LP220-2,4A	3 + 1 gnd #6,#8, 600 V, RHH/RHW insulation
2428	E-135, E-160A (CCK-81)	41	RGS conduit	425.70	534.55	Pull rope	Soft-Fiber Polyester
						A-2035-2	3 + 1 gnd #6,#8, 600 V, RHH/RHW insulation
						LP221-6,8A	3 + 1 gnd #6,#8, 600 V, RHH/RHW insulation
2429	E-136	41	RGS conduit	212.85	534.55	LP219-6,8A	3 + 1 gnd #6,#8, 600 V, RHH/RHW insulation
2430	E-138	41	RGS conduit	425.70	534.55	LP222-2,4A	3 + 1 gnd #6,#8, 600 V, RHH/RHW insulation
						LP222-6,8A	3 + 1 gnd #6,#8, 600 V, RHH/RHW insulation
2432	E-139	41	RGS conduit	425.70	534.55	LP219-2,4A	3 + 1 gnd #6,#8, 600 V, RHH/RHW insulation
						LP219-6,8A	3 + 1 gnd #6,#8, 600 V, RHH/RHW insulation
2434	E-135	41	RGS conduit	0.00	534.55	Pull rope	Soft-Fiber Polyester
2435	E-136	41	RGS conduit	0.00	534.55	Pull rope	Soft-Fiber Polyester
2436	E-136	41	RGS conduit	0.00	534.55	Pull rope	Soft-Fiber Polyester
2437	E-136	41	RGS conduit	0.00	534.55	Pull rope	Soft-Fiber Polyester
2438	E-136	41	RGS conduit	0.00	534.55	Pull rope	Soft-Fiber Polyester
2439	E-136	41	RGS conduit	0.00	534.55	Pull rope	Soft-Fiber Polyester
2440	E-136	41	RGS conduit	0.00	534.55	Pull rope	Soft-Fiber Polyester

CONDUIT DATA

Conduit No	Reference	Size	Type	Total Fill (mm²)	Allowable Fill (mm²)	Included Cable No.	Conductor Type
2441	E-137	41	RGS conduit	0.00	534.55	Pull rope	Soft-Fiber Polyester
2442	E-137	41	RGS conduit	0.00	534.55	Pull rope	Soft-Fiber Polyester
2443	E-137	41	RGS conduit	0.00	534.55	Pull rope	Soft-Fiber Polyester
2444	E-137	41	RGS conduit	0.00	534.55	Pull rope	Soft-Fiber Polyester
2446	E-138	41	RGS conduit	0.00	534.55	Pull rope	Soft-Fiber Polyester
2447	E-138	41	RGS conduit	0.00	534.55	Pull rope	Soft-Fiber Polyester
2448	E-138	41	RGS conduit	0.00	534.55	Pull rope	Soft-Fiber Polyester
2449	E-139	41	RGS conduit	0.00	534.55	Pull rope	Soft-Fiber Polyester
2450	E-139	41	RGS conduit	0.00	534.55	Pull rope	Soft-Fiber Polyester
2451	E-139	41	RGS conduit	0.00	534.55	Pull rope	Soft-Fiber Polyester
2452	E-139	41	RGS conduit	0.00	534.55	Pull rope	Soft-Fiber Polyester
2453	E-139	41	RGS conduit	0.00	534.55	Pull rope	Soft-Fiber Polyester
2454	E-139	41	RGS conduit	0.00	534.55	Pull rope	Soft-Fiber Polyester
2455	E-140	41	RGS conduit	0.00	534.55	Pull rope	Soft-Fiber Polyester
2457	E-140	41	RGS conduit	0.00	534.55	Pull rope	Soft-Fiber Polyester
2459	E-139	41	RGS conduit	0.00	534.55	Pull rope	Soft-Fiber Polyester
2460	E-137	41	RGS conduit	0.00	534.55	Pull rope	Soft-Fiber Polyester
2461	E-138	41	RGS conduit	0.00	534.55	Pull rope	Soft-Fiber Polyester
2468	E-135	41	RGS conduit	212.85	534.55	A-2011-2	3 + 1 gnd #6,#8, 600 V, RHH/RHW insulation
2469	E-135	41	RGS conduit	212.85	534.55	A-2011-2	3 + 1 gnd #6,#8, 600 V, RHH/RHW insulation
2470	E-135	41	RGS conduit	212.85	534.55	A-2011-2	3 + 1 gnd #6,#8, 600 V, RHH/RHW insulation
2471	E-135	41	RGS conduit	212.85	534.55	A-2011-2	3 + 1 gnd #6,#8, 600 V, RHH/RHW insulation
2472	E-135	41	RGS conduit	212.85	534.55	A-2011-2	3 + 1 gnd #6,#8, 600 V, RHH/RHW insulation
2473	E-135	41	RGS conduit	212.85	534.55	A-2011-2	3 + 1 gnd #6,#8, 600 V, RHH/RHW insulation
2474	E-135	41	RGS conduit	212.85	534.55	A-2011-2	3 + 1 gnd #6,#8, 600 V, RHH/RHW insulation
2475	E-136	41	RGS conduit	212.85	534.55	A-2011-2	3 + 1 gnd #6,#8, 600 V, RHH/RHW insulation
2476	E-136	41	RGS conduit	212.85	534.55	A-2011-2	3 + 1 gnd #6,#8, 600 V, RHH/RHW insulation
2477	E-136	41	RGS conduit	212.85	534.55	A-2011-2	3 + 1 gnd #6,#8, 600 V, RHH/RHW insulation

For continuation, see next sheet.

SKETCH No. CCK-81-SK-E-413 R0
R. GARCIA 5/28/09

CONDUIT AND TRAY SCHEDULE

E-413

REVISED BY	DATE REVISED
PBP	DATE 8/02
AB	8/02

CALCULATED/DESIGNED BY
CHECKED BY

DESIGN OVERSIGHT
BEHZAD GOLEMOHAMMADI

STATE OF CALIFORNIA - DEPARTMENT OF TRANSPORTATION
Caltrans

LAST REVISION
DATE PLOTTED => 5/22/2008

DIST	COUNTY	ROUTE	KILOMETER POST TOTAL PROJECT	SHEET No	TOTAL SHEETS
04	SF	80	13.2/13.9	366	1204

Caltrans Metric

12/19/02
REGISTERED ELECTRICAL ENGINEER DATE

12-6-04
PLANS APPROVAL DATE

REGISTERED PROFESSIONAL ENGINEER JENS ERLINGSSON No. 8249 Exp. 9/30/06 ELECTRICAL STATE OF CALIFORNIA

PB POWER, Inc.
A Parsons Brinckerhoff Company
303 Second St., Suite 700N
San Francisco, CA 94107-1317

The State of California or its officers or agents shall not be responsible for the accuracy or completeness of electronic copies of this plan sheet.

Caltrans now has a web site! To get to the web site, go to http://www.dot.ca.gov

CONDUIT DATA

Conduit No	Reference	Size	Type	Total Fill (mm2)	Allowable Fill (mm2)	Included Cable No.	Conductor Type
2052	E-114	41	RGS conduit	325.65	534.55	UP104-6a-3	2 + 1 gnd #8,#10, 600 V, RHH/RHW insulation
						UP104-6a-2	3 + 1 gnd #8,#10, 600 V, RHH/RHW insulation
						UP104-9-2	2 + 1 gnd #8,#10, 600 V, RHH/RHW insulation
2053	E-119	41	RGS conduit	325.65	534.55	UP104-6b-2	2 + 1 gnd #8,#10, 600 V, RHH/RHW insulation
						UP104-9-1	2 + 1 gnd #8,#10, 600 V, RHH/RHW insulation
						UP104-6b-1	3 + 1 gnd #8,#10, 600 V, RHH/RHW insulation
2054	E-119	41	RGS conduit	356.30	534.55	UP104-9	1-2/C + gnd #10, 600 V, EPR insulation
						UP104-6-1	3 + 1 gnd #8,#10, 600 V, RHH/RHW insulation
						UP104-6-2	2 + 1 gnd #8,#10, 600 V, RHH/RHW insulation
2055	E-115	41	RGS conduit	325.65	534.55	UP105-10a-1	3 + 1 gnd #8,#10, 600 V, RHH/RHW insulation
						UP105-10a-3	2 + 1 gnd #8,#10, 600 V, RHH/RHW insulation
						UP105-9-2	2 + 1 gnd #8,#10, 600 V, RHH/RHW insulation
2056	E-115	41	RGS conduit	266.38	534.55	UP105-10a-1	3 + 1 gnd #8,#10, 600 V, RHH/RHW insulation
						UP105-10a-2	3 + 1 gnd #8,#10, 600 V, RHH/RHW insulation
2057	E-115	41	RGS conduit	325.65	534.55	UP105-10a-2	3 + 1 gnd #8,#10, 600 V, RHH/RHW insulation
						UP105-10a-3	2 + 1 gnd #8,#10, 600 V, RHH/RHW insulation
						UP105-9-2	2 + 1 gnd #8,#10, 600 V, RHH/RHW insulation
2058	E-119	41	RGS conduit	325.65	534.55	UP105-10b-1	3 + 1 gnd #8,#10, 600 V, RHH/RHW insulation
						UP105-10b-2	2 + 1 gnd #8,#10, 600 V, RHH/RHW insulation
						UP105-9-1	2 + 1 gnd #8,#10, 600 V, RHH/RHW insulation
2059	E-119	41	RGS conduit	456.88	534.55	UP105-10-1	3 + 1 gnd #8,#10, 600 V, RHH/RHW insulation
						UP105-10-2	2 + 1 gnd #8,#10, 600 V, RHH/RHW insulation
						UP105-9	1-2/C + gnd #8, 600 V, EPR insulation
2060	E-116	41	RGS conduit	325.65	534.55	UP106-9-2	2 + 1 gnd #8,#10, 600 V, RHH/RHW insulation
						UP106-6a-1	3 + 1 gnd #8,#10, 600 V, RHH/RHW insulation
						UP106-6a-3	2 + 1 gnd #8,#10, 600 V, RHH/RHW insulation
2061	E-116	41	RGS conduit	266.38	534.55	UP106-6a-1	3 + 1 gnd #8,#10, 600 V, RHH/RHW insulation
						UP106-6a-2	3 + 1 gnd #8,#10, 600 V, RHH/RHW insulation
2062	E-116	41	RGS conduit	325.65	534.55	UP106-6a-3	2 + 1 gnd #8,#10, 600 V, RHH/RHW insulation
						UP106-6a-2	3 + 1 gnd #8,#10, 600 V, RHH/RHW insulation
						UP106-9-2	2 + 1 gnd #8,#10, 600 V, RHH/RHW insulation
2063	E-119	41	RGS conduit	325.65	534.55	UP106-6b-2	2 + 1 gnd #8,#10, 600 V, RHH/RHW insulation
						UP106-6b-1	3 + 1 gnd #8,#10, 600 V, RHH/RHW insulation
						UP106-9-1	2 + 1 gnd #8,#10, 600 V, RHH/RHW insulation
2064	E-119	41	RGS conduit	456.88	534.55	UP106-9	1-2/C + gnd #8, 600 V, EPR insulation
						UP106-6-2	2 + 1 gnd #8,#10, 600 V, RHH/RHW insulation
						UP106-6-1	3 + 1 gnd #8,#10, 600 V, RHH/RHW insulation
2065	E-119	41	RGS conduit	456.88	534.55	UP107-6-2	2 + 1 gnd #8,#10, 600 V, RHH/RHW insulation
						UP107-6-1	3 + 1 gnd #8,#10, 600 V, RHH/RHW insulation
						UP107-9	1-2/C + gnd #8, 600 V, EPR insulation
2066	E-119	41	RGS conduit	325.65	534.55	UP107-6b-2	2 + 1 gnd #8,#10, 600 V, RHH/RHW insulation
						UP107-6b-1	3 + 1 gnd #8,#10, 600 V, RHH/RHW insulation
						UP107-9-1	2 + 1 gnd #8,#10, 600 V, RHH/RHW insulation
2067	E-117	41	RGS conduit	325.65	534.55	UP107-9-2	2 + 1 gnd #8,#10, 600 V, RHH/RHW insulation
						UP107-6a-3	2 + 1 gnd #8,#10, 600 V, RHH/RHW insulation
						UP107-6a-1	3 + 1 gnd #8,#10, 600 V, RHH/RHW insulation
2068	E-117	41	RGS conduit	266.38	534.55	UP107-6a-2	3 + 1 gnd #8,#10, 600 V, RHH/RHW insulation
						UP107-6a-1	3 + 1 gnd #8,#10, 600 V, RHH/RHW insulation
2069	E-117	41	RGS conduit	325.65	534.55	UP107-6a-3	2 + 1 gnd #8,#10, 600 V, RHH/RHW insulation
						UP107-6a-2	3 + 1 gnd #8,#10, 600 V, RHH/RHW insulation
						UP107-9-2	2 + 1 gnd #8,#10, 600 V, RHH/RHW insulation
2070	E-119	41	RGS conduit	325.65	534.55	UP107-6c-2	2 + 1 gnd #8,#10, 600 V, RHH/RHW insulation
						UP107-6c-1	3 + 1 gnd #8,#10, 600 V, RHH/RHW insulation
						UP107-9-3	2 + 1 gnd #8,#10, 600 V, RHH/RHW insulation
2071	E-119	41	RGS conduit	325.65	534.55	UP108-10a-2	2 + 1 gnd #8,#10, 600 V, RHH/RHW insulation
						UP108-10a-1	3 + 1 gnd #8,#10, 600 V, RHH/RHW insulation
						UP108-9-5	2 + 1 gnd #8,#10, 600 V, RHH/RHW insulation
2072	E-119	41	RGS conduit	325.65	534.55	UP108-9-4	2 + 1 gnd #8,#10, 600 V, RHH/RHW insulation
						UP108-10b-2	2 + 1 gnd #8,#10, 600 V, RHH/RHW insulation
						UP108-10b-1	3 + 1 gnd #8,#10, 600 V, RHH/RHW insulation

CONDUIT DATA

Conduit No	Reference	Size	Type	Total Fill (mm2)	Allowable Fill (mm2)	Included Cable No.	Conductor Type
2073	E-119	41	RGS conduit	325.65	534.55	UP108-9-3	2 + 1 gnd #8,#10, 600 V, RHH/RHW insulation
						UP108-10-2	2 + 1 gnd #8,#10, 600 V, RHH/RHW insulation
						UP108-10-1	3 + 1 gnd #8,#10, 600 V, RHH/RHW insulation
2074	E-118	41	RGS conduit	325.65	534.55	UP108-12a-3	2 + 1 gnd #8,#10, 600 V, RHH/RHW insulation
						UP108-12a-1	3 + 1 gnd #8,#10, 600 V, RHH/RHW insulation
						UP108-9-2	2 + 1 gnd #8,#10, 600 V, RHH/RHW insulation
2075	E-118	41	RGS conduit	266.38	534.55	UP108-12a-2	3 + 1 gnd #8,#10, 600 V, RHH/RHW insulation
						UP108-12a-1	3 + 1 gnd #8,#10, 600 V, RHH/RHW insulation
				325.65	534.55	UP108-9-2	2 + 1 gnd #8,#10, 600 V, RHH/RHW insulation
						UP108-12a-2	3 + 1 gnd #8,#10, 600 V, RHH/RHW insulation
2076	E-118	41	RGS conduit			UP108-12a-3	2 + 1 gnd #8,#10, 600 V, RHH/RHW insulation
				325.65	534.55	UP108-12b-2	2 + 1 gnd #8,#10, 600 V, RHH/RHW insulation
						UP108-12b-1	3 + 1 gnd #8,#10, 600 V, RHH/RHW insulation
2077	E-119	41	RGS conduit			UP108-9-1	2 + 1 gnd #8,#10, 600 V, RHH/RHW insulation
				456.88	534.55	UP108-12-2	2 + 1 gnd #8,#10, 600 V, RHH/RHW insulation
						UP108-12-1	3 + 1 gnd #8,#10, 600 V, RHH/RHW insulation
2078	E-119	41	RGS conduit			UP108-9	1-2/C + gnd #8, 600 V, EPR insulation
				0.00	534.55	Pull rope	Soft-Fiber Polyester
2111	E-135 E-160A CCR-81	41	RGS conduit	0.00	534.55	Pull rope	Soft-Fiber Polyester
2112	E-135	41	RGS conduit	0.00	534.55	Pull rope	Soft-Fiber Polyester
2113	E-135	41	RGS conduit	0.00	534.55	Pull rope	Soft-Fiber Polyester
2114	E-136	41	RGS conduit	0.00	534.55	Pull rope	Soft-Fiber Polyester
2115	E-136	41	RGS conduit	0.00	534.55	Pull rope	Soft-Fiber Polyester
2116	E-136, E-137	41	RGS conduit	0.00	534.55	Pull rope	Soft-Fiber Polyester
2117	E-136	41	RGS conduit	0.00	534.55	Pull rope	Soft-Fiber Polyester
2118	E-137, E-138	41	RGS conduit	0.00	534.55	Pull rope	Soft-Fiber Polyester
2123	E-138	41	RGS conduit	0.00	534.55	Pull rope	Soft-Fiber Polyester
2125	E-138	41	RGS conduit	0.00	534.55	Pull rope	Soft-Fiber Polyester
2127	E-139	41	RGS conduit	0.00	534.55	Pull rope	Soft-Fiber Polyester
2130	E-140	41	RGS conduit	0.00	534.55	Pull rope	Soft-Fiber Polyester
2211	E-135	41	RGS conduit	0.00	534.55	Pull rope	Soft-Fiber Polyester
2212	E-135	41	RGS conduit	0.00	534.55	Pull rope	Soft-Fiber Polyester
2213	E-135	41	RGS conduit				

For continuation, see next sheet.

SKETCH No. CCR-81-SK-E-411 R0
R. GARCIA 5/28/09

CONDUIT AND TRAY SCHEDULE

E-411

	DATE	REVISED BY	DATE REVISED
CALCULATED/DESIGNED BY	PBP	8/02	AB 8/02
CHECKED BY			

DESIGN OVERSIGHT
BEHZAD GOLEMOHAMMADI

STATE OF CALIFORNIA - DEPARTMENT OF TRANSPORTATION
Caltrans

LAST REVISION | DATE PLOTTED => 5/28/2009

DIST	COUNTY	ROUTE	KILOMETER POST TOTAL PROJECT	SHEET No	TOTAL SHEETS
04	SF	80	13.2/13.9	367 R1	1204

REGISTERED ELECTRICAL ENGINEER 12/19/02 DATE

12-6-04
PLANS APPROVAL DATE

REGISTERED PROFESSIONAL ENGINEER JENS ERLINGSSON No. 8249 Exp. 9/30/06 ELECTRICAL STATE OF CALIFORNIA

PB POWER, Inc.
A Parsons Brinckerhoff Company
303 Second St., Suite 700N
San Francisco, CA 94107-1317

The State of California or its officers or agents shall not be responsible for the accuracy or completeness of electronic copies of this plan sheet.

Caltrans now has a web site! To get to the web site, go to http://www.dot.ca.gov

REQUEST FOR INFORMATION NOT ADDRESSED IN THIS CCO REMAIN IN FORCE

MARK	DATE	DESCRIPTIONS	BY	CH'D	CCO#
1	03/04/08	BARRIER MODIFICATIONS	TW	RG	44

REVISIONS

CONTRACT CHANGE ORDER NO._____
SHEET_____ OF_____

FOR REVISION ONLY

REGISTERED PROFESSIONAL ENGINEER FADI WALIEDDINE No. 11465 Exp. 12/31/2009 ELECTRICAL STATE OF CALIFORNIA

Caltrans Metric

CONDUIT DATA

Conduit No	Reference	Size	Type	Total Fill (mm²)	Allowable Fill (mm²)	Included Cable No.	Conductor Type
2214	E-136	41	RGS conduit	0.00	534.55	Pull rope	Soft-Fiber Polyester
2215	E-136	41	RGS conduit	0.00	534.55	Pull rope	Soft-Fiber Polyester
2216	E-136	41	RGS conduit	0.00	534.55	Pull rope	Soft-Fiber Polyester
2217	E-136	41	RGS conduit	0.00	534.55	Pull rope	Soft-Fiber Polyester
2218	E-136	41	RGS conduit	0.00	534.55	Pull rope	Soft-Fiber Polyester
2219	E-137	41	RGS conduit	0.00	534.55	Pull rope	Soft-Fiber Polyester
2220	E-137	41	RGS conduit	0.00	534.55	Pull rope	Soft-Fiber Polyester
2221	E-137	41	RGS conduit	0.00	534.55	Pull rope	Soft-Fiber Polyester
2222	E-138	41	RGS conduit	0.00	534.55	Pull rope	Soft-Fiber Polyester
2223	E-138	41	RGS conduit	0.00	534.55	Pull rope	Soft-Fiber Polyester
2224	E-138	41	RGS conduit	0.00	534.55	Pull rope	Soft-Fiber Polyester
2225	E-138	41	RGS conduit	0.00	534.55	Pull rope	Soft-Fiber Polyester
2226	E-139	41	RGS conduit	0.00	534.55	Pull rope	Soft-Fiber Polyester
2227	E-139	41	RGS conduit	0.00	534.55	Pull rope	Soft-Fiber Polyester
2228	E-139	41	RGS conduit	0.00	534.55	Pull rope	Soft-Fiber Polyester
2229	E-139	41	RGS conduit	0.00	534.55	Pull rope	Soft-Fiber Polyester
2230	E-139	41	RGS conduit	0.00	534.55	Pull rope	Soft-Fiber Polyester
2231	E-140	41	RGS conduit	0.00	534.55	Pull rope	Soft-Fiber Polyester
2300	E-138	41	RGS conduit	212.85	534.55	A-2013-2	3 + 1 gnd #6,#8, 600 V RHH/RHW insulation
2301	E-138	41	RGS conduit	0.00	534.55	Pull rope	Soft-Fiber Polyester
2302	E-137	41	RGS conduit	0.00	534.55	Pull rope	Soft-Fiber Polyester
2326	E-135	41	RGS conduit	339.73	534.55	Pull rope	Soft-Fiber Polyester
						A-2011-2	3 + 1 gnd #6,#8, 600 V RHH/RHW insulation
						UP204-1	1-2/C + gnd #10, 600 V, EPR insulation
2327	E-135	41	RGS conduit	339.73	534.55	UP204-1	1-2/C + gnd #10, 600 V, EPR insulation
						A-2012-2	3 + 1 gnd #6,#8, 600 V RHH/RHW insulation
						Pull rope	Soft-Fiber Polyester
2328	E-135, E-160A	41	RGS conduit	339.73	534.55	UP204-1	1-2/C + gnd #10, 600 V, EPR insulation
						Pull rope	Soft-Fiber Polyester
						S-2031-2	3 + 1 gnd #6,#8, 600 V RHH/RHW insulation
2329	E-135	41	RGS conduit	0.00	534.55	Pull rope	Soft-Fiber Polyester
2330	E-135	41	RGS conduit	212.85	534.55	A-2014-2	3 + 1 gnd #6,#8, 600 V RHH/RHW insulation
						Pull rope	Soft-Fiber Polyester
2331	E-135	41	RGS conduit	0.00	534.55	Pull rope	Soft-Fiber Polyester
2332	E-136	41	RGS conduit	0.00	534.55	Pull rope	Soft-Fiber Polyester
2333	E-136	41	RGS conduit	0.00	534.55	Pull rope	Soft-Fiber Polyester
2334	E-135	41	RGS conduit	126.88	534.55	Pull rope	Soft-Fiber Polyester
						UP205-1	1-2/C + gnd #10, 600 V, EPR insulation
2335	E-136	41	RGS conduit	339.73	534.55	A-3039-2	3 + 1 gnd #6,#8, 600 V RHH/RHW insulation
						Pull rope	Soft-Fiber Polyester
						UP205-1	1-2/C + gnd #10, 600 V, EPR insulation
2336	E-136	41	RGS conduit	339.73	534.55	Pull rope	Soft-Fiber Polyester
						UP205-1	1-2/C + gnd #10, 600 V, EPR insulation
						A-3039-2	3 + 1 gnd #6,#8, 600 V RHH/RHW insulation
2338	E-136	41	RGS conduit	0.00	534.55	Pull rope	Soft-Fiber Polyester
2339	E-136	41	RGS conduit	339.73	534.55	A-3040-2	3 + 1 gnd #6,#8, 600 V RHH/RHW insulation
						Pull rope	Soft-Fiber Polyester
						UP206-1	1-2/C + gnd #10, 600 V, EPR insulation

CCR-81

CONDUIT DATA

Conduit No	Reference	Size	Type	Total Fill (mm²)	Allowable Fill (mm²)	Included Cable No.	Conductor Type
2340	E-137	41	RGS conduit	339.73	534.55	Pull rope	Soft-Fiber Polyester
						UP206-1	1-2/C + gnd #10, 600 V, EPR insulation
						A-3040-2	3 + 1 gnd #6,#8, 600 V RHH/RHW insulation
2341	E-137	41	RGS conduit	0.00	534.55	Pull rope	Soft-Fiber Polyester
2346	E-138	41	RGS conduit	0.00	534.55	Pull rope	Soft-Fiber Polyester
2348	E-138, E-139	41	RGS conduit	481.21	534.55	S-2031-4	3+1gnd #4,#8, 600V, RHH/RHW insulation
						Pull rope	Soft-Fiber Polyester
						A-2035-4	3 + 1 gnd #6,#8, 600 V RHH/RHW insulation
2350	E-139	41	RGS conduit	425.70	534.55	Pull rope	Soft-Fiber Polyester
						A-2035-4	3 + 1 gnd #6,#8, 600 V RHH/RHW insulation
						S-2032-2	3 + 1 gnd #6,#8, 600 V RHH/RHW insulation
2353	E-139	41	RGS conduit	425.70	534.55	S-2032-2	3 + 1 gnd #6,#8, 600 V RHH/RHW insulation
						Pull rope	Soft-Fiber Polyester
						A-2035-4	3 + 1 gnd #6,#8, 600 V RHH/RHW insulation
2355	E-140	41	RGS conduit	425.70	534.55	A-2035-4	3 + 1 gnd #6,#8, 600 V RHH/RHW insulation
						Pull rope	Soft-Fiber Polyester
						S-2032-2	3 + 1 gnd #6,#8, 600 V RHH/RHW insulation
2357	E-140	41	RGS conduit	0.00	534.55	Pull rope	Soft-Fiber Polyester
2358	E-139	41	RGS conduit	0.00	534.55	Pull rope	Soft-Fiber Polyester
2359	E-137	41	RGS conduit	126.88	534.55	UP206-1	1-2/C + gnd #10, 600 V, EPR insulation
						Pull rope	Soft-Fiber Polyester
2360	E-138	41	RGS conduit	0.00	534.55	Pull rope	Soft-Fiber Polyester
2361	E-136	41	RGS conduit	0.00	534.55	Pull rope	Soft-Fiber Polyester
2364	E-137	41	RGS conduit	212.85	534.55	LP220-2,4A	3 + 1 gnd #6,#8, 600 V RHH/RHW insulation
2368	E-135	41	RGS conduit	212.85	534.55	LP219-2,4A	3 + 1 gnd #6,#8, 600 V RHH/RHW insulation
2369	E-135	41	RGS conduit	212.85	534.55	LP219-2,4A	3 + 1 gnd #6,#8, 600 V RHH/RHW insulation
2370	E-135	41	RGS conduit	212.85	534.55	LP219-2,4A	3 + 1 gnd #6,#8, 600 V RHH/RHW insulation
2371	E-135	41	RGS conduit	212.85	534.55	LP219-6,8A	3 + 1 gnd #6,#8, 600 V RHH/RHW insulation
2372	E-135	41	RGS conduit	212.85	534.55	LP219-6,8A	3 + 1 gnd #6,#8, 600 V RHH/RHW insulation
2373	E-135	41	RGS conduit	212.85	534.55	LP219-6,8A	3 + 1 gnd #6,#8, 600 V RHH/RHW insulation
2374	E-135	41	RGS conduit	212.85	534.55	LP219-6,8A	3 + 1 gnd #6,#8, 600 V RHH/RHW insulation
2375	E-136	41	RGS conduit	0.00	534.55	Pull rope	Soft-Fiber Polyester
2376	E-136	41	RGS conduit	212.85	534.55	LP220-2,4A	3 + 1 gnd #6,#8, 600 V RHH/RHW insulation

For continuation, see next sheet.

SKETCH No. CCR-81-SK-E-412 R0
R. GARCIA 5/28/09

CONDUIT AND TRAY SCHEDULE

E-412

STATE OF CALIFORNIA - DEPARTMENT OF TRANSPORTATION
Caltrans

DESIGN OVERSIGHT: BEHZAD GOLEMOHAMMADI

CALCULATED/DESIGNED BY	PBP	DATE 8/02	REVISED BY	DATE REVISED
CHECKED BY	AB	8/02		

DATE PLOTTED => 5/22/2008

DIST	COUNTY	ROUTE	KILOMETER POST TOTAL PROJECT	SHEET No	TOTAL SHEETS
04	SF	80	13.2/13.9	370 R2	1204

Jens Erlingsson 12/19/02
REGISTERED ELECTRICAL ENGINEER DATE

12-6-04
PLANS APPROVAL DATE

REGISTERED PROFESSIONAL ENGINEER JENS ERLINGSSON No. 8249 Exp. 9/30/06 ELECTRICAL STATE OF CALIFORNIA

PB POWER, Inc.
A Parsons Brinckerhoff Company
303 Second St., Suite 700N
San Francisco, CA 94107-1317

The State of California or its officers or agents shall not be responsible for the accuracy or completeness of electronic copies of this plan sheet.

Caltrans now has a web site! To get to the web site, go to: http://www.dot.ca.gov

Caltrans Metric

REGISTERED PROFESSIONAL ENGINEER S. A. ESTOQUE, JR. No. E-10151 Exp. 12/31/2008 ELECTRICAL STATE OF CALIFORNIA

FOR REVISION ONLY

REQUEST FOR INFORMATION NOT ADDRESSED IN THIS CCO REMAIN IN FORCE					
2	03/04/08	BARRIER MODIFICATIONS	JS BM	RG SE	44
1	02/19/08	ELECTRICAL MODIFICATIONS	MP EL	RR	42
MARK	DATE	DESCRIPTIONS	BY	CH'D	CCO#
		REVISIONS			

CONTRACT CHANGE ORDER NO._____
SHEET_____ OF_____

CONDUIT DATA

Conduit No	Reference	Size	Type	Total Fill (mm²)	Allowable Fill (mm²)	Included Cable No.	Conductor Type
2551	E-139	41	RGS conduit	212.85	534.55	LP223-2,4A	3 + 1 gnd #6,#8, 600 V, RHH/RHW insulation
2552	E-139	41	RGS conduit	212.85	534.55	LP223-2,4A	3 + 1 gnd #6,#8, 600 V, RHH/RHW insulation
2553	E-139	41	RGS conduit	212.85	534.55	LP223-2,4A	3 + 1 gnd #6,#8, 600 V, RHH/RHW insulation
2554	E-139	41	RGS conduit	212.85	534.55	LP223-2,4A	3 + 1 gnd #6,#8, 600 V, RHH/RHW insulation
2555	E-139	41	RGS conduit	212.85	534.55	LP223-2,4A	3 + 1 gnd #6,#8, 600 V, RHH/RHW insulation
2556	E-139	41	RGS conduit	212.85	534.55	LP223-6,8A	3 + 1 gnd #6,#8, 600 V, RHH/RHW insulation
2557	E-139	41	RGS conduit	212.85	534.55	LP223-6,8A	3 + 1 gnd #6,#8, 600 V, RHH/RHW insulation
2558	E-140	41	RGS conduit	212.85	534.55	LP223-6,8A	3 + 1 gnd #6,#8, 600 V, RHH/RHW insulation
2559	E-140	41	RGS conduit	212.85	534.55	LP223-6,8A	3 + 1 gnd #6,#8, 600 V, RHH/RHW insulation
2560	E-140	41	RGS conduit	212.85	534.55	LP223-6,8A	3 + 1 gnd #6,#8, 600 V, RHH/RHW insulation
2561	E-140	41	RGS conduit	212.85	534.55	LP223-6,8A	3 + 1 gnd #6,#8, 600 V, RHH/RHW insulation
2562	E-140	41	RGS conduit	212.85	534.55	LP223-6,8A	3 + 1 gnd #6,#8, 600 V, RHH/RHW insulation
2563	E-140	41	RGS conduit	212.85	534.55	LP223-6,8A	3 + 1 gnd #6,#8, 600 V, RHH/RHW insulation
2611	E-135	41	RGS conduit	0.00	534.55	Pull rope	Soft-Fiber Polyester
2612	E-135	41	RGS conduit	0.00	534.55	Pull rope	Soft-Fiber Polyester
2613	E-135	41	RGS conduit	0.00	534.55	Pull rope	Soft-Fiber Polyester
2614	E-136	41	RGS conduit	0.00	534.55	Pull rope	Soft-Fiber Polyester
2615	E-136	41	RGS conduit	0.00	534.55	Pull rope	Soft-Fiber Polyester
2616	E-136	41	RGS conduit	0.00	534.55	Pull rope	Soft-Fiber Polyester
2617	E-136	41	RGS conduit	0.00	534.55	Pull rope	Soft-Fiber Polyester
2618	E-137	41	RGS conduit	0.00	534.55	Pull rope	Soft-Fiber Polyester
2619	E-137	41	RGS conduit	0.00	534.55	Pull rope	Soft-Fiber Polyester
2620	E-137	41	RGS conduit	0.00	534.55	Pull rope	Soft-Fiber Polyester
2621	E-137	41	RGS conduit	0.00	534.55	Pull rope	Soft-Fiber Polyester
2622	E-138	41	RGS conduit	0.00	534.55	Pull rope	Soft-Fiber Polyester
2623	E-138	41	RGS conduit	0.00	534.55	Pull rope	Soft-Fiber Polyester
2624	E-138	41	RGS conduit	0.00	534.55	Pull rope	Soft-Fiber Polyester
2625	E-138	41	RGS conduit	0.00	534.55	Pull rope	Soft-Fiber Polyester
2626	E-139	41	RGS conduit	0.00	534.55	Pull rope	Soft-Fiber Polyester
2627	E-139	41	RGS conduit	0.00	534.55	Pull rope	Soft-Fiber Polyester
2628	E-139	41	RGS conduit	0.00	534.55	Pull rope	Soft-Fiber Polyester
2629	E-139	41	RGS conduit	0.00	534.55	Pull rope	Soft-Fiber Polyester
2630	E-139	41	RGS conduit	0.00	534.55	Pull rope	Soft-Fiber Polyester
2631	E-140	41	RGS conduit	0.00	534.55	Pull rope	Soft-Fiber Polyester
2637	E-138	41	RGS conduit	212.85	534.55	Pull rope	Soft-Fiber Polyester
2638	E-138	41	RGS conduit	212.85	534.55	A-2013-2	3 + 1 gnd #6,#8, 600 V, RHH/RHW insulation
2639	E-138	41	RGS conduit	212.85	534.55	A-2013-2	3 + 1 gnd #6,#8, 600 V, RHH/RHW insulation
2640	E-138	41	RGS conduit	212.85	534.55	A-2013-2	3 + 1 gnd #6,#8, 600 V, RHH/RHW insulation
2641	E-138	41	RGS conduit	212.85	534.55	A-2013-2	3 + 1 gnd #6,#8, 600 V, RHH/RHW insulation
2642	E-138	41	RGS conduit	212.85	534.55	A-2013-2	3 + 1 gnd #6,#8, 600 V, RHH/RHW insulation

CONDUIT DATA

Conduit No	Reference	Size	Type	Total Fill (mm²)	Allowable Fill (mm²)	Included Cable No.	Conductor Type
2643	E-138	41	RGS conduit	212.85	534.55	A-2013-2	3 + 1 gnd #6,#8, 600 V, RHH/RHW insulation
2644	E-138	41	RGS conduit	212.85	534.55	A-2013-2	3 + 1 gnd #6,#8, 600 V, RHH/RHW insulation
2645	E-138	41	RGS conduit	212.85	534.55	A-2013-2	3 + 1 gnd #6,#8, 600 V, RHH/RHW insulation
2646	E-138	41	RGS conduit	212.85	534.55	A-2013-2	3 + 1 gnd #6,#8, 600 V, RHH/RHW insulation
2647	E-139	41	RGS conduit	212.85	534.55	A-2013-2	3 + 1 gnd #6,#8, 600 V, RHH/RHW insulation
2648	E-139	41	RGS conduit	212.85	534.55	A-2013-2	3 + 1 gnd #6,#8, 600 V, RHH/RHW insulation
2649	E-139	41	RGS conduit	212.85	534.55	A-2013-2	3 + 1 gnd #6,#8, 600 V, RHH/RHW insulation
2650	E-139	41	RGS conduit	212.85	534.55	A-2014-2	3 + 1 gnd #6,#8, 600 V, RHH/RHW insulation
2651	E-139	41	RGS conduit	212.85	534.55	A-2014-2	3 + 1 gnd #6,#8, 600 V, RHH/RHW insulation
2652	E-139	41	RGS conduit	212.85	534.55	A-2014-2	3 + 1 gnd #6,#8, 600 V, RHH/RHW insulation
2653	E-139	41	RGS conduit	212.85	534.55	A-2014-2	3 + 1 gnd #6,#8, 600 V, RHH/RHW insulation
2654	E-139	41	RGS conduit	212.85	534.55	A-2014-2	3 + 1 gnd #6,#8, 600 V, RHH/RHW insulation
2655	E-139	41	RGS conduit	212.85	534.55	A-2014-2	3 + 1 gnd #6,#8, 600 V, RHH/RHW insulation
2656	E-139	41	RGS conduit	212.85	534.55	A-2014-2	3 + 1 gnd #6,#8, 600 V, RHH/RHW insulation
2657	E-139	41	RGS conduit	212.85	534.55	A-2014-2	3 + 1 gnd #6,#8, 600 V, RHH/RHW insulation
2658	E-140	41	RGS conduit	212.85	534.55	A-2014-2	3 + 1 gnd #6,#8, 600 V, RHH/RHW insulation
2659	E-140	41	RGS conduit	212.85	534.55	A-2014-2	3 + 1 gnd #6,#8, 600 V, RHH/RHW insulation
2660	E-140	41	RGS conduit	212.85	534.55	A-2014-2	3 + 1 gnd #6,#8, 600 V, RHH/RHW insulation
2661	E-140	41	RGS conduit	212.85	534.55	A-2014-2	3 + 1 gnd #6,#8, 600 V, RHH/RHW insulation
2662	E-140	41	RGS conduit	212.85	534.55	A-2014-2	3 + 1 gnd #6,#8, 600 V, RHH/RHW insulation
2663	E-140	41	RGS conduit	212.85	534.55	A-2014-2	3 + 1 gnd #6,#8, 600 V, RHH/RHW insulation
2664	E-135	41	RGS conduit	212.85	534.55	LP219-6,8A	3 + 1 gnd #6,#8, 600 V, RHH/RHW insulation
2757	E-135 E-160A	41	RGS conduit	0.00	534.55	Pull rope	Soft-Fiber Polyester
2758	E-135 E-160A	41	RGS conduit, PVC Coated	227.46	534.55	Pull rope	Soft-Fiber Polyester
						UP205-6	1-2/C + gnd #8, 600 V, EPR insulation
2759	E-135	41	RGS conduit	440.31	534.55	A-3031-2	3 + 1 gnd #6,#8, 600 V, RHH/RHW insulation
						UP205-6	1-2/C + gnd #8, 600 V, EPR insulation
						Pull rope	Soft-Fiber Polyester

CCR-81

For continuation, see next sheet.

SKETCH No. CCR-81-SK-E-415 R0
R. GARCIA 5/28/09

CONDUIT AND TRAY SCHEDULE

E-415

STATE OF CALIFORNIA - DEPARTMENT OF TRANSPORTATION
Caltrans

DESIGN OVERSIGHT
BEHZAD GOLEMOHAMMADI

CALCULATED/DESIGNED BY PBP
CHECKED BY AB
DATE 8/02
REVISED BY
DATE REVISED

LAST REVISION
DATE PLOTTED => 5/22/2008

FOR REDUCED PLANS ORIGINAL

DIST	COUNTY	ROUTE	KILOMETER POST TOTAL PROJECT	SHEET NO	TOTAL SHEETS
04	SF	80	13.2/13.9	371 R2	1204

REGISTERED ELECTRICAL ENGINEER 12/19/02 DATE

12-6-04
PLANS APPROVAL DATE

REGISTERED PROFESSIONAL ENGINEER JENS ERLINGSSON No. 8249 Exp. 9/30/06 ELECTRICAL STATE OF CALIFORNIA

PB POWER, Inc.
A Parsons Brinckerhoff Company
303 Second St., Suite 700N
San Francisco, CA 94107-1317

The State of California or its officers or agents shall not be responsible for the accuracy or completeness of electronic copies of this plan sheet.

Caltrans now has a web site! To get to the web site, go to: http://www.dot.ca.gov

Caltrans Metric

REGISTERED PROFESSIONAL ENGINEER S. A. ESTOQUE, JR. No. E-10151 Exp. 12/31/2008 ELECTRICAL STATE OF CALIFORNIA

FOR REVISION ONLY

REQUEST FOR INFORMATION NOT ADDRESSED IN THIS CCO REMAIN IN FORCE

MARK	DATE	DESCRIPTIONS	BY	CH'D	CCO#
2	03/04/08	BARRIER MODIFICATIONS	JS BM	RG SE	44
1	02/19/08	ELECTRICAL MODIFICATIONS	MP EL	RR	42

REVISIONS

CONTRACT CHANGE ORDER NO._____
SHEET_____ OF _____

CONDUIT DATA

Conduit No	Reference	Size	Type	Total Fill (mm²)	Allowable Fill (mm²)	Included Cable No.	Conductor Type
2760	E-135	41	RGS conduit	440.31	534.55	A-3031-2	3 + 1 gnd #6,#8, 600 V, RHH/RHW insulation
						UP205-6	1-2/C + gnd #8, 600 V, EPR insulation
						Pull rope	Soft-Fiber Polyester
2761	E-135	41	RGS conduit	425.70	534.55	LP219-2,4A	3 + 1 gnd #6,#8, 600 V, RHH/RHW insulation
						Pull rope	Soft-Fiber Polyester
						A-3031-2	3 + 1 gnd #6,#8, 600 V, RHH/RHW insulation
2762	E-135	41	RGS conduit	212.85	534.55	Pull rope	Soft-Fiber Polyester
						A-3031-2	3 + 1 gnd #6,#8, 600 V, RHH/RHW insulation
2763	E-135	41	RGS conduit	212.85	534.55	Pull rope	Soft-Fiber Polyester
						A-3031-2	3 + 1 gnd #6,#8, 600 V, RHH/RHW insulation
2764	E-135	41	RGS conduit	212.85	534.55	Pull rope	Soft-Fiber Polyester
						A-3031-2	3 + 1 gnd #6,#8, 600 V, RHH/RHW insulation
2765	E-135	41	RGS conduit	212.85	534.55	Pull rope	Soft-Fiber Polyester
						A-3031-2	3 + 1 gnd #6,#8, 600 V, RHH/RHW insulation
2766	E-136	41	RGS conduit	212.85	534.55	Pull rope	Soft-Fiber Polyester
						A-3031-2	3 + 1 gnd #6,#8, 600 V, RHH/RHW insulation
2767	E-136	41	RGS conduit	0.00	534.55	Pull rope	Soft-Fiber Polyester
2768	E-136	41	RGS conduit	212.85	534.55	Pull rope	Soft-Fiber Polyester
						A-3032-2	3 + 1 gnd #6,#8, 600 V, RHH/RHW insulation
2769	E-136	41	RGS conduit	212.85	534.55	Pull rope	Soft-Fiber Polyester
						A-3032-2	3 + 1 gnd #6,#8, 600 V, RHH/RHW insulation
2770	E-136	41	RGS conduit	212.85	534.55	Pull rope	Soft-Fiber Polyester
						A-3032-2	3 + 1 gnd #6,#8, 600 V, RHH/RHW insulation
2771	E-136	41	RGS conduit	212.85	534.55	A-3032-2	3 + 1 gnd #6,#8, 600 V, RHH/RHW insulation
						Pull rope	Soft-Fiber Polyester
2772	E-136	41	RGS conduit	212.85	534.55	Pull rope	Soft-Fiber Polyester
						A-3032-2	3 + 1 gnd #6,#8, 600 V, RHH/RHW insulation
2773	E-136	41	RGS conduit	212.85	534.55	Pull rope	Soft-Fiber Polyester
						A-3033-2	3 + 1 gnd #6,#8, 600 V, RHH/RHW insulation
2774	E-136	53	RGS conduit	537.14	681.55	Pull rope	Soft-Fiber Polyester
						A-3040-3	1-3/C + gnd #6, 600 V, EPR insulation
						A-3033-2	3 + 1 gnd #6,#8, 600 V, RHH/RHW insulation
2775	E-136	53	RGS conduit	537.14	681.55	A-3033-2	3 + 1 gnd #6,#8, 600 V, RHH/RHW insulation
						A-3040-3	1-3/C + gnd #6, 600 V, EPR insulation
						Pull rope	Soft-Fiber Polyester
2776	E-136	41	RGS conduit	212.85	534.55	A-3033-2	3 + 1 gnd #6,#8, 600 V, RHH/RHW insulation
						Pull rope	Soft-Fiber Polyester
2777	E-136	41	RGS conduit	212.85	534.55	Pull rope	Soft-Fiber Polyester
						A-3033-2	3 + 1 gnd #6,#8, 600 V, RHH/RHW insulation
2778	E-137	41	RGS conduit	212.85	534.55	Pull rope	Soft-Fiber Polyester
						A-3033-2	3 + 1 gnd #6,#8, 600 V, RHH/RHW insulation
2779	E-137	41	RGS conduit	0.00	534.55	Pull rope	Soft-Fiber Polyester
2780	E-137	41	RGS conduit	425.70	534.55	LP221-2,4A	3 + 1 gnd #6,#8, 600 V, RHH/RHW insulation
						A-3034-2	3 + 1 gnd #6,#8, 600 V, RHH/RHW insulation
						Pull rope	Soft-Fiber Polyester
2781	E-137	41	RGS conduit	212.85	534.55	Pull rope	Soft-Fiber Polyester
						A-3034-2	3 + 1 gnd #6,#8, 600 V, RHH/RHW insulation
2782	E-137	41	RGS conduit	212.85	534.55	Pull rope	Soft-Fiber Polyester
						A-3034-2	3 + 1 gnd #6,#8, 600 V, RHH/RHW insulation
2783	E-137	41	RGS conduit	212.85	534.55	Pull rope	Soft-Fiber Polyester
						A-3034-2	3 + 1 gnd #6,#8, 600 V, RHH/RHW insulation
2784	E-137	41	RGS conduit	212.85	534.55	Pull rope	Soft-Fiber Polyester
						A-3034-2	3 + 1 gnd #6,#8, 600 V, RHH/RHW insulation
2785	E-137	41	RGS conduit	0.00	534.55	Pull rope	Soft-Fiber Polyester

CONDUIT DATA

Conduit No	Reference	Size	Type	Total Fill (mm²)	Allowable Fill (mm²)	Included Cable No.	Conductor Type
2786	E-137	41	RGS conduit	212.85	534.55	A-3035-2	3 + 1 gnd #6,#8, 600 V, RHH/RHW insulation
						Pull rope	Soft-Fiber Polyester
2787	E-137	41	RGS conduit	212.85	534.55	Pull rope	Soft-Fiber Polyester
						A-3035-2	3 + 1 gnd #6,#8, 600 V, RHH/RHW insulation
2788	E-137	41	RGS conduit	212.85	534.55	Pull rope	Soft-Fiber Polyester
						A-3035-2	3 + 1 gnd #6,#8, 600 V, RHH/RHW insulation
2789	E-138	41	RGS conduit	212.85	534.55	Pull rope	Soft-Fiber Polyester
						A-3035-2	3 + 1 gnd #6,#8, 600 V, RHH/RHW insulation
2790	E-138	41	RGS conduit	212.85	534.55	Pull rope	Soft-Fiber Polyester
						A-3035-2	3 + 1 gnd #6,#8, 600 V, RHH/RHW insulation
2791	E-138	41	RGS conduit	0.00	534.55	Pull rope	Soft-Fiber Polyester
2792	E-138	41	RGS conduit	212.85	534.55	A-3036-2	3 + 1 gnd #6,#8, 600 V, RHH/RHW insulation
						Pull rope	Soft-Fiber Polyester
2793	E-138	41	RGS conduit	212.85	534.55	A-3036-2	3 + 1 gnd #6,#8, 600 V, RHH/RHW insulation
						Pull rope	Soft-Fiber Polyester
2794	E-138	41	RGS conduit	212.85	534.55	Pull rope	Soft-Fiber Polyester
						A-3036-2	3 + 1 gnd #6,#8, 600 V, RHH/RHW insulation
2795	E-138	41	RGS conduit	425.70	534.55	Pull rope	Soft-Fiber Polyester
						A-3036-2	3 + 1 gnd #6,#8, 600 V, RHH/RHW insulation
						LP222-2,4A	3 + 1 gnd #6,#8, 600 V, RHH/RHW insulation
2796	E-138	41	RGS conduit	212.85	534.55	Pull rope	Soft-Fiber Polyester
						A-3036-2	3 + 1 gnd #6,#8, 600 V, RHH/RHW insulation
2797	E-138	41	RGS conduit	212.85	534.55	Pull rope	Soft-Fiber Polyester
						A-3036-2	3 + 1 gnd #6,#8, 600 V, RHH/RHW insulation
2798	E-138	41	RGS conduit	212.85	534.55	A-3036-2	3 + 1 gnd #6,#8, 600 V, RHH/RHW insulation
						Pull rope	Soft-Fiber Polyester
2799	E-138	41	RGS conduit	212.85	534.55	A-3036-2	3 + 1 gnd #6,#8, 600 V, RHH/RHW insulation
						Pull rope	Soft-Fiber Polyester
2857	~~E-138~~ E-160A CCR-81	41	RGS conduit	0.00	534.55	Pull rope	Soft-Fiber Polyester 2
2858	E-135 E-160A	41	RGS conduit, PVC Coated	0.00	534.55	Pull rope	Soft-Fiber Polyester
2859	E-135	41	RGS conduit	212.85	534.55	Pull rope	Soft-Fiber Polyester
						A-2011-2	3 + 1 gnd #6,#8, 600 V, RHH/RHW insulation
2860	E-135	41	RGS conduit	0.00	534.55	Pull rope	Soft-Fiber Polyester
2861	E-135	41	RGS conduit	212.85	534.55	Pull rope	Soft-Fiber Polyester
						LP219-6,8A	3 + 1 gnd #6,#8, 600 V, RHH/RHW insulation

For continuation, see next sheet.

SKETCH No. CCR-81-SK-E-416 R0
R. GARCIA 5/28/09

CONDUIT AND TRAY SCHEDULE

E-416

STATE OF CALIFORNIA - DEPARTMENT OF TRANSPORTATION
Caltrans

DESIGN OVERSIGHT
BEHZAD GOLEMOHAMMADI

CALCULATED/ DESIGNED BY	PBP	DATE 8/02	REVISED BY	DATE REVISED
CHECKED BY	AB	8/02		

LAST REVISION
DATE PLOTTED => 5/22/2008
TIME PLOTTED => 09:09

DIST	COUNTY	ROUTE	KILOMETER POST TOTAL PROJECT	SHEET NO	TOTAL SHEETS
04	SF	80	13.2/13.9	377 R1	1204

REGISTERED ELECTRICAL ENGINEER 12/19/02 DATE

12-6-04
PLANS APPROVAL DATE

REGISTERED PROFESSIONAL ENGINEER JENS ERLINGSSON No. 8249 Exp. 9/30/06 ELECTRICAL STATE OF CALIFORNIA

PB POWER, Inc.
A Parsons Brinckerhoff Company
303 Second St., Suite 700N
San Francisco, CA 94107-1317

The State of California or its officers or agents shall not be responsible for the accuracy or completeness of electronic copies of this plan sheet.

Caltrans now has a web site! To get to the web site, go to: http://www.dot.ca.gov

Caltrans Metric

REGISTERED PROFESSIONAL ENGINEER S. A. ESTOQUE, JR. No. E-10151 Exp. 12/31/2008 ELECTRICAL STATE OF CALIFORNIA

FOR REVISION ONLY

REQUEST FOR INFORMATION NOT ADDRESSED IN THIS CCO REMAIN IN FORCE

MARK	DATE	DESCRIPTIONS	BY	CH'D	CCO#
1	09/24/08	CABLE ELECTRICAL	RR AG	RG SE	72

REVISIONS

CONTRACT CHANGE ORDER NO. _____
SHEET _____ OF _____

CONDUIT DATA

Conduit No	Reference	Size	Type	Total Fill (mm²)	Allowable Fill (mm²)	Included Cable No.	Conductor Type
3010	E-185, E-186	53	RGS conduit	456.88	879.42	UP208-8-1	3 + 1 gnd #8,#10, 600 V, RHH/RHW insulation
						UP208-7	1-2/C + gnd #8,600 V, EPR insulation
						UP208-8-2	2 + 1 gnd #8,#10, 600 V, RHH/RHW insulation
3101	E-226	41	Liquidtight flexible metal conduit	503.37	511.11	S-3021-2	3 + 1 gnd #6,#8, 600 V, RHH/RHW insulation
						S-3056-10	1-2/C #14, 600 V, EPR insulation
						S-3056-11	1-2/C #14, 600 V, EPR insulation 1
				1		S-3056-14	1-2/C #14, 600 V, EPR insulation
						Pull rope	Soft-Fiber Polyester
						S-3056-2	3 + 1 gnd #6,#8, 600 V, RHH/RHW insulation
3102	E-226	41	Liquidtight flexible metal conduit	503.37	511.11	S-3021-2	3 + 1 gnd #6,#8, 600 V, RHH/RHW insulation
						S-3056-14	1-2/C #14, 600 V, EPR insulation
						S-3056-10	1-2/C #14, 600 V, EPR insulation 1
						Pull rope	Soft-Fiber Polyester
						S-3056-2	3 + 1 gnd #6,#8, 600 V, RHH/RHW insulation
						S-3056-11	1-2/C #14, 600 V, EPR insulation
							1
3103	E-226	41	Liquidtight flexible metal conduit	503.37	511.11	S-3056-11	1-2/C #14, 600 V, EPR insulation
						S-3056-2	3 + 1 gnd #6,#8, 600 V, RHH/RHW insulation
						S-3021-2	3 + 1 gnd #6,#8, 600 V, RHH/RHW insulation
						S-3056-10	1-2/C #14, 600 V, EPR insulation 1
						Pull rope	Soft-Fiber Polyester
						S-3056-14	1-2/C #14, 600 V, EPR insulation 1
3104	E-226, E-227	41	Liquidtight flexible metal conduit	477.48	511.11	S-3056-2	3 + 1 gnd #6,#8, 600 V, RHH/RHW insulation
						S-3056-11	1-2/C #14, 600 V, EPR insulation
						S-3056-14	1-2/C #14, 600 V, EPR insulation 1
						Pull rope	Soft-Fiber Polyester
						S-3021-2	3 + 1 gnd #6,#8, 600 V, RHH/RHW insulation
3105	E-227	41	Liquidtight flexible metal conduit	477.48	511.11	Pull rope	Soft-Fiber Polyester
						S-3021-2	3 + 1 gnd #6,#8, 600 V, RHH/RHW insulation
						S-3056-2	3 + 1 gnd #6,#8, 600 V, RHH/RHW insulation
						S-3056-14	1-2/C #14, 600 V, EPR insulation
						S-3056-11	1-2/C #14, 600 V, EPR insulation 1
3106	E-227	41	Liquidtight flexible metal conduit	451.59	511.11	Pull rope	Soft-Fiber Polyester
						S-3056-14	1-2/C #14, 600 V, EPR insulation 1
						S-3021-2	3 + 1 gnd #6,#8, 600 V, RHH/RHW insulation
						S-3056-2	3 + 1 gnd #6,#8, 600 V, RHH/RHW insulation
3107	E-100	78	RGS-PVC coated conduit	991.38	2564.19	S-3056-8	1-4/C #14,600 V, EPR insulation
						Pull rope	Soft-Fiber Polyester
						S-3023-1	1-3/C + gnd #4,600 V, EPR insulation
						S-3022-1	1-3/C + gnd #2,600 V, EPR insulation
3108	E-100	41	RGS-PVC coated conduit	527.18	534.55	Pull rope	Soft-Fiber Polyester
						A-3012-1	1-3/C + gnd #2,600 V, EPR insulation
3109	E-96, ~~E-46~~ E-66A	41	RGS-PVC coated conduit	503.37	534.55	S-3056-14	1-2/C #14, 600 V, EPR insulation 1
						Pull rope	Soft-Fiber Polyester
						S-3056-2	3 + 1 gnd #6,#8, 600 V, RHH/RHW insulation
						S-3021-2	3 + 1 gnd #6,#8, 600 V, RHH/RHW insulation
			CCR-81			S-3056-10	1-2/C #14, 600 V, EPR insulation
						S-3056-11	1-2/C #14, 600 V, EPR insulation 1
3110	E-96, ~~E-46~~ E-66A	41	RGS-PVC coated conduit	309.08	534.55	A-3011-2	3 + 1 gnd #6,#8, 600 V, RHH/RHW insulation
						Pull rope	Soft-Fiber Polyester
				1		A-3008-2	2 + 1 gnd #8,#10, 600 V, RHH/RHW insulation
3111	E-226	41	Liquidtight flexible metal conduit	309.08	511.11	A-3011-2	3 + 1 gnd #6,#8, 600 V, RHH/RHW insulation
						Pull rope	Soft-Fiber Polyester
						A-3008-2	2 + 1 gnd #8,#10, 600 V, RHH/RHW insulation
3112	E-226	41	Liquidtight flexible metal conduit	309.08	511.11	A-3008-2	2 + 1 gnd #8,#10, 600 V, RHH/RHW insulation
						Pull rope	Soft-Fiber Polyester
						A-3011-2	3 + 1 gnd #6,#8, 600 V, RHH/RHW insulation
3113	E-226	41	Liquidtight flexible metal conduit	309.08	511.11	A-3008-2	2 + 1 gnd #8,#10, 600 V, RHH/RHW insulation
						A-3011-2	3 + 1 gnd #6,#8, 600 V, RHH/RHW insulation
						Pull rope	Soft-Fiber Polyester
3114	E-226	41	Liquidtight flexible metal conduit	309.08	511.11	Pull rope	Soft-Fiber Polyester
						A-3011-2	3 + 1 gnd #6,#8, 600 V, RHH/RHW insulation
						A-3008-2	2 + 1 gnd #8,#10, 600 V, RHH/RHW insulation

CONDUIT DATA

Conduit No	Reference	Size	Type	Total Fill (mm²)	Allowable Fill (mm²)	Included Cable No.	Conductor Type
3115	E-226	41	Liquidtight flexible metal conduit	309.08	511.11	A-3008-2	2 + 1 gnd #8,#10, 600 V, RHH/RHW insulation
						A-3011-2	3 + 1 gnd #6,#8, 600 V, RHH/RHW insulation
						Pull rope	Soft-Fiber Polyester
3116	E-226	41	Liquidtight flex metal conduit	212.85	511.11	Pull rope	Soft-Fiber Polyester
						A-3011-2	3 + 1 gnd #6,#8, 600 V, RHH/RHW insulation
3117	E-226	41	Liquidtight flex metal conduit	309.08	511.11	Pull rope	Soft-Fiber Polyester
						A-3008-2	2 + 1 gnd #8,#10, 600 V, RHH/RHW insulation
						A-3011-2	3 + 1 gnd #6,#8, 600 V, RHH/RHW insulation
3118	E-226, E-227	41	Liquidtight flexible metal conduit	309.08	511.11	A-3008-2	2 + 1 gnd #8,#10, 600 V, RHH/RHW insulation
						A-3011-2	3 + 1 gnd #6,#8, 600 V, RHH/RHW insulation
						Pull rope	Soft-Fiber Polyester
3119	E-227	41	Liquidtight flexible metal conduit	309.08	511.11	A-3008-2	2 + 1 gnd #8,#10, 600 V, RHH/RHW insulation
						A-3011-2	3 + 1 gnd #6,#8, 600 V, RHH/RHW insulation
						Pull rope	Soft-Fiber Polyester
3120	E-227	41	Liquidtight flexible metal conduit	309.08	511.11	A-3008-2	2 + 1 gnd #8,#10, 600 V, RHH/RHW insulation
						A-3011-2	3 + 1 gnd #6,#8, 600 V, RHH/RHW insulation
						Pull rope	Soft-Fiber Polyester
3121	E-227	41	Liquidtight flexible metal conduit	309.08	511.11	A-3008-2	2 + 1 gnd #8,#10, 600 V, RHH/RHW insulation
						A-3011-2	3 + 1 gnd #6,#8, 600 V, RHH/RHW insulation
						Pull rope	Soft-Fiber Polyester
3122	E-227	41	Liquidtight flexible metal conduit	309.08	511.11	A-3008-2	2 + 1 gnd #8,#10, 600 V, RHH/RHW insulation
						A-3011-2	3 + 1 gnd #6,#8, 600 V, RHH/RHW insulation
						Pull rope	Soft-Fiber Polyester
3123	E-227	41	Liquidtight flexible metal conduit	309.08	511.11	Pull rope	Soft-Fiber Polyester
						A-3008-2	2 + 1 gnd #8,#10, 600 V, RHH/RHW insulation
						A-3011-2	3 + 1 gnd #6,#8, 600 V, RHH/RHW insulation
3124	E-227	41	Liquidtight flexible metal conduit	309.08	511.11	A-3011-2	3 + 1 gnd #6,#8, 600 V, RHH/RHW insulation
						Pull rope	Soft-Fiber Polyester
						A-3008-2	2 + 1 gnd #8,#10, 600 V, RHH/RHW insulation
3125	E-227	41	Liquidtight flexible metal conduit	309.08	511.11	A-3011-2	3 + 1 gnd #6,#8, 600 V, RHH/RHW insulation
						A-3008-2	2 + 1 gnd #8,#10, 600 V, RHH/RHW insulation
						Pull rope	Soft-Fiber Polyester
3126	E-227	41	Liquidtight flexible metal conduit	309.08	511.11	A-3008-2	2 + 1 gnd #8,#10, 600 V, RHH/RHW insulation
						A-3011-2	3 + 1 gnd #6,#8, 600 V, RHH/RHW insulation
1						Pull rope	Soft-Fiber Polyester
3127	E-227	41	Liquidtight flexible metal conduit	96.23	511.11	A-3008-2	2 + 1 gnd #8,#10, 600 V, RHH/RHW insulation
						Pull rope	Soft-Fiber Polyester
3129	E-50, E-100	41	RGS-PVC coated conduit	477.48	534.55	S-3022-2	3 + 1 gnd #6,#8, 600 V, RHH/RHW insulation
						S-3023-2	3 + 1 gnd #6,#8, 600 V, RHH/RHW insulation
						S-3056-15	1-2/C #14, 600 V, EPR insulation
						S-3056-16	1-2/C #14, 600 V, EPR insulation 1
						Pull rope	Soft-Fiber Polyester

For continuation, see next sheet.

SKETCH No. CCR-81-SK-E-422 R0
R. GARCIA 5/28/09

CONDUIT AND TRAY SCHEDULE

E-422

REVISED BY	DATE REVISED
PBP	8/02

CALCULATED/DESIGNED BY	DATE
AB	8/02
CHECKED BY	

DESIGN OVERSIGHT
BEHZAD GOLEMOHAMMADI

STATE OF CALIFORNIA - DEPARTMENT OF TRANSPORTATION
Caltrans

DATE PLOTTED => 9/24/2008
LAST REVISION

FOR REDUCED PLANS ORIGINAL 0 20 60 80

DGN FILE =>t:\13103\MS\pse\SAS Struc\CCO\SAS CC072\2008-09-24_Issued for Submittal\04-0120f1_0377R01.dgn