DIST	COUNTY	ROUTE	KILOMETER POST TOTAL PROJECT	SHEET No	TOTAL SHEETS
04	SF	80	13.2/13.9	131 S1R1	1204

REGISTERED ELECTRICAL ENGINEER — DATE 9/18/07

PLANS APPROVAL DATE

REGISTERED PROFESSIONAL ENGINEER — MARNELL FUMIO TAKAKI — No. E 8651 — Exp. 9/30/2008 ELECTRICAL — STATE OF CALIFORNIA

PB AMERICAS, Inc.
A Parsons Brinckerhoff Company
303 Second St., Suite 700N
San Francisco, CA 94107-1317

The State of California or its officers or agents shall not be responsible for the accuracy or completeness of electronic copies of this plan sheet.

Caltrans now has a web site! To get to the web site, go to http://www.dot.ca.gov

Caltrans Metric

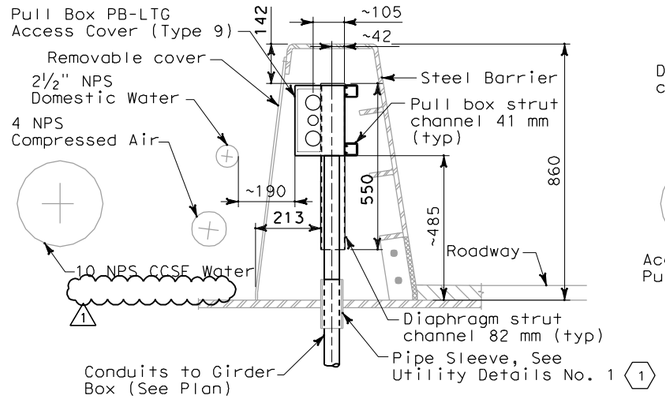

SECTION B-B

TYPICAL PULL BOX PB-LTG AND CONDUIT LOCATION (W5)
SCALE 1:10
(W2) (SIMILAR)

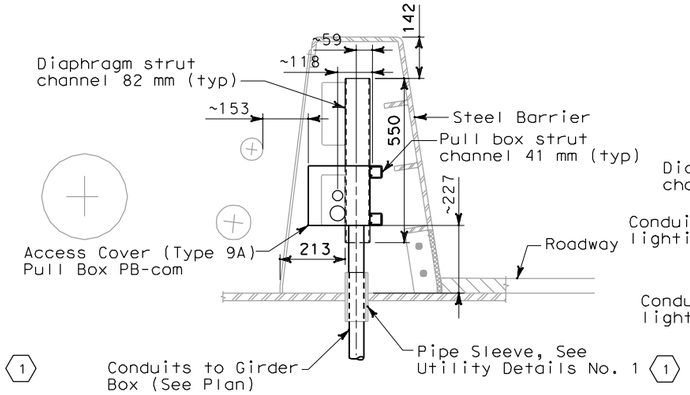

SECTION C-C

TYPICAL PULL BOX PB-COM AND CONDUIT LOCATION (W5)
SCALE 1:10
(W2) (SIMILAR)

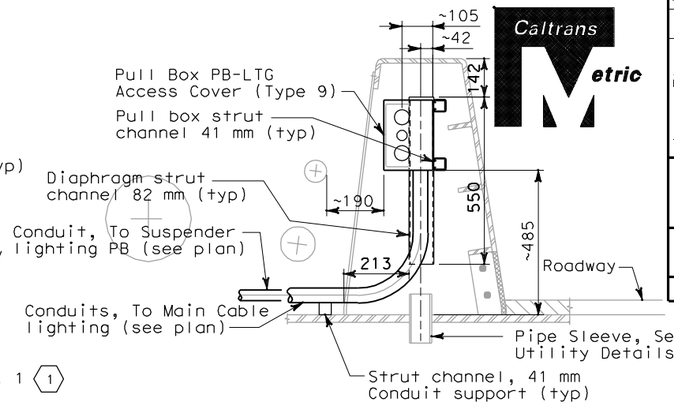

DETAIL 6

TYPICAL CONDUIT LOCATION FROM PULL BOX PB-LTG TO SUSPENDER AND MAIN CABLE LIGHTING (W5)
SCALE 1:10
(W2) (SIMILAR)

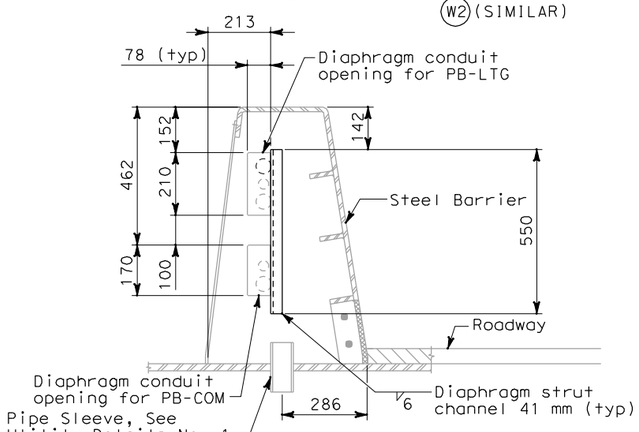

DETAIL 1

TYPICAL CONDUIT SUPPORT THROUGH DIAPHRAGM (W5)
SCALE 1:10

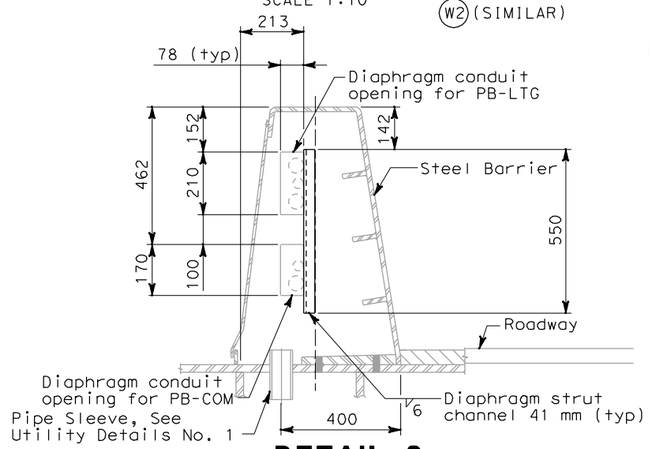

DETAIL 2

TYPICAL CONDUIT SUPPORT THROUGH DIAPHRAGM (W2)
SCALE 1:10

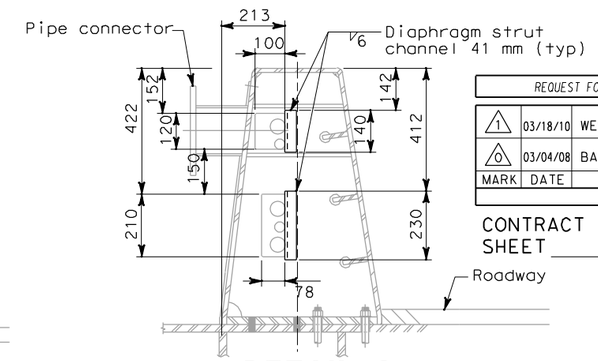

DETAIL 3

AT BARRIER WITH MOUNTED SIGNS (1)
CONDUIT SUPPORT DIAPHRAGM (W2 (PP44 + 2.150))
CONDUIT SUPPORT DIAPHRAGM (W5 (PP44 + 2.150))
SCALE 1:10

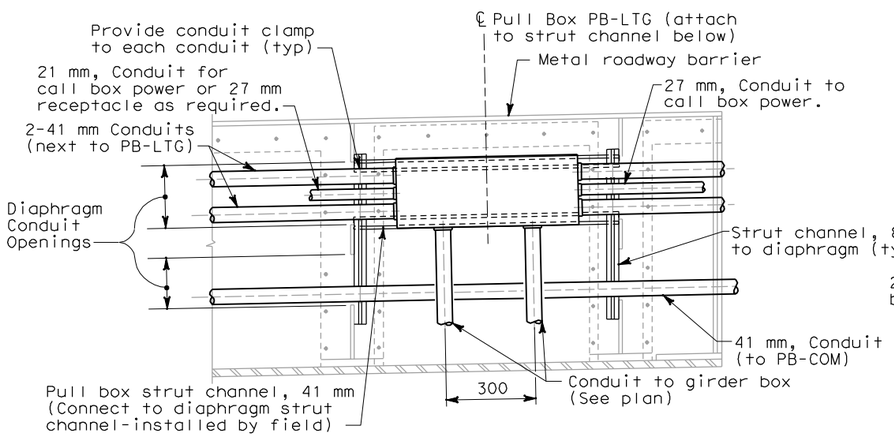

DETAIL 4

TYPICAL CONDUIT SUPPORT PULL BOX PB-LTG MOUNTING
SCALE 1:10

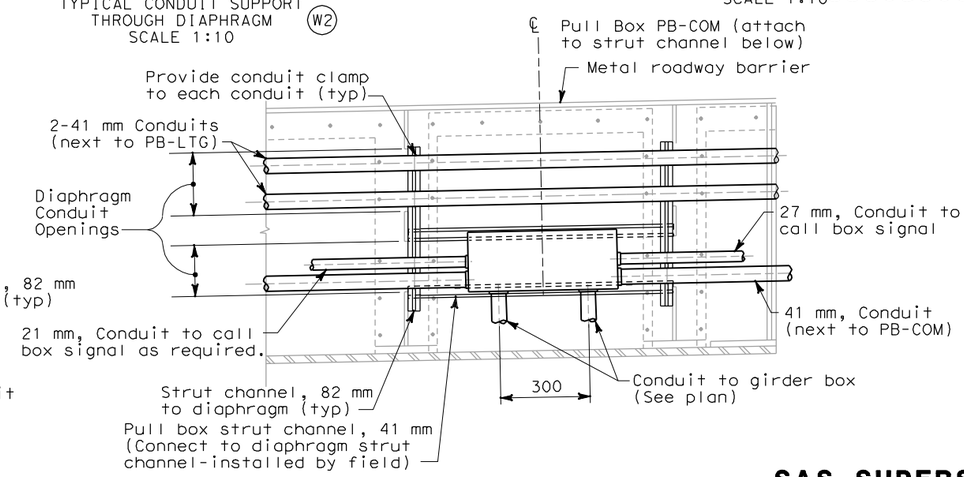

DETAIL 5

TYPICAL CONDUIT SUPPORT PULL BOX PB-COM MOUNTING
SCALE 1:10

REGISTERED PROFESSIONAL ENGINEER — DAVID H. OTO — No. 10699 — Exp. 06/30/2011 ELECTRICAL — STATE OF CALIFORNIA (1)

FOR REVISION ONLY

REQUEST FOR INFORMATION NOT ADDRESSED IN THIS CCO REMAIN IN FORCE

MARK	DATE	DESCRIPTIONS	BY	CH'D	CCO#
1	03/18/10	WEST END BARRIER CONDUIT	TW	RG DO	44S1
0	03/04/08	BARRIER MODIFICATIONS	EL	RG SE	44

REVISIONS

CONTRACT CHANGE ORDER NO. _____
SHEET _____ OF _____

NOTES:

1. References:
   - For pull box schedule, see Sheet E-83.
   - For barrier details, see structural drawings.
2. For location of pull boxes inside girder, see Sheet E-96 through E-101.

SHEET NOTES:

(1) To prevent moisture from passing inside the sleeve, the Contractor shall install sealant between the sleeve and conduit.

(2) Spare pipe sleeves shall be capped on both ends.

DETAILS
SAS SUPERSTRUCTURE ROADWAY CONDUIT AND PULL BOX LOCATIONS

SCALE AS NOTED

E-66A

REVISED BY	DATE REVISED
FK	IAH 11/02

CALCULATED/DESIGNED BY — CHECKED BY

DESIGN OVERSIGHT — BEHZAD GOLEMOHAMMADI

STATE OF CALIFORNIA - DEPARTMENT OF TRANSPORTATION — Caltrans

LAST REVISION 00-00-00 — DATE PLOTTED => 3/17/2010 — TIME PLOTTED => 3:38:03 PM

THIS PLAN IS ACCURATE FOR ELECTRICAL WORK ONLY.

ALL DIMENSIONS ARE IN MILLIMETERS UNLESS OTHERWISE SHOWN.

FOR REDUCED PLANS ORIGINAL SCALE IS IN MILLIMETERS — 0 20 40 60 80

DGN FILE =>T:\13103\MS\pse\SAS Struc\CCO\SAS CCO44S1\2010-03-18 Addendum\04-0120F1_0131S01R01.dgn
USERNAME =>llorico

CU 04251 — EA 0120F1