DIST.	COUNTY	ROUTE	KILOMETER POST TOTAL PROJECT	SHEET NO.	TOTAL SHEETS
04	SF	80	13.2/13.9	638R2	1204

Caltrans Metric

George Baker
REGISTERED ENGINEER - CIVIL
12-6-04
PLANS APPROVAL DATE

REGISTERED PROFESSIONAL ENGINEER George S. Baker No. C 57112 Exp. 12/31/05 CIVIL STATE OF CALIFORNIA

The State of California or its officers or agents shall not be responsible for the accuracy or completeness of electronic copies of this plan sheet.

T.Y. LIN / MOFFATT & NICHOL
825 BATTERY STREET
SAN FRANCISCO, CA 94111

Caltrans now has a web site! To get to the web site, go to: http://www.dot.ca.gov

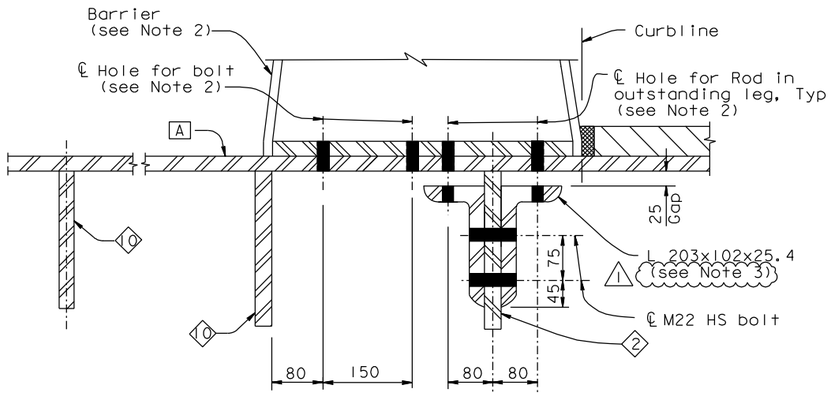

SECTION A-A
1:5

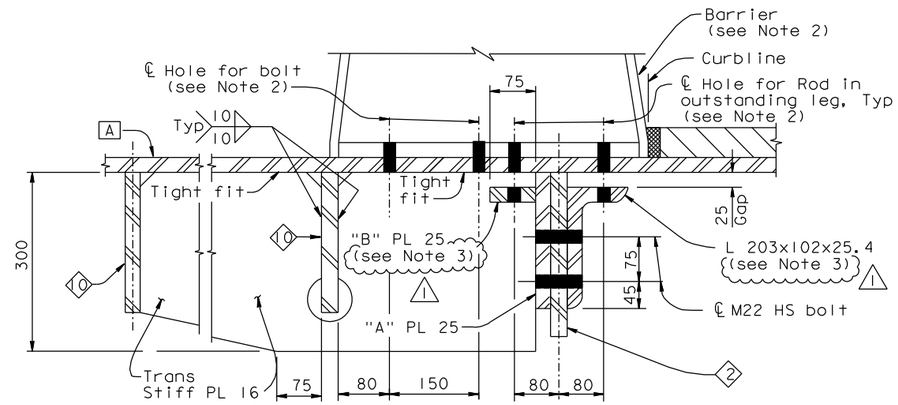

SECTION B-B
1:5

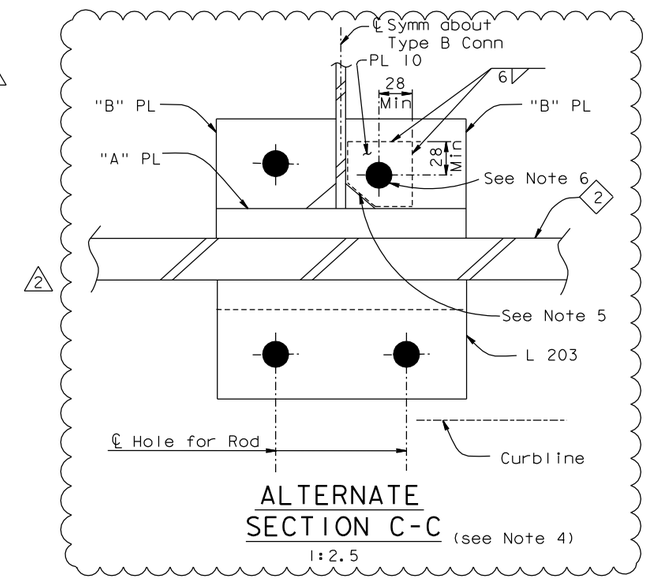

ALTERNATE SECTION C-C (see Note 4)
1:2.5

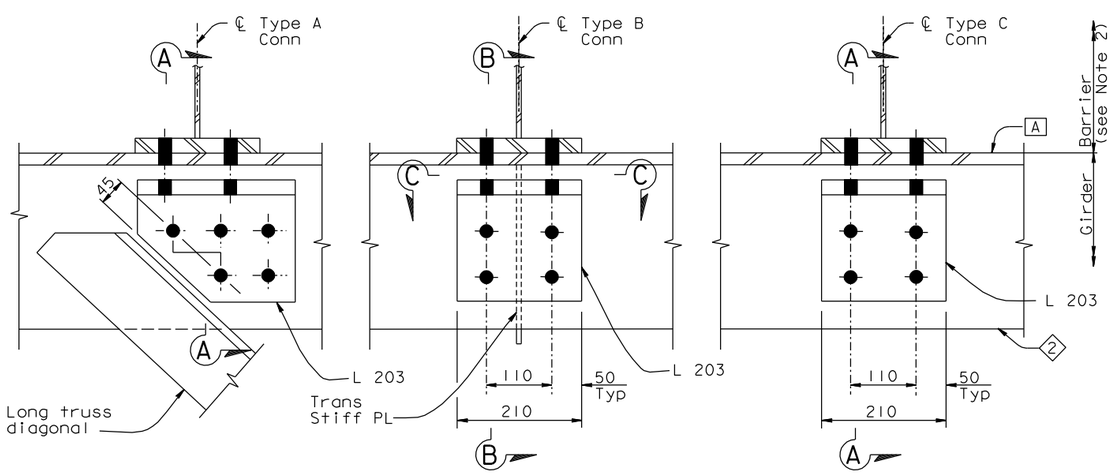

BARRIER CONNECTION DETAILS (see Note 1)
1:5

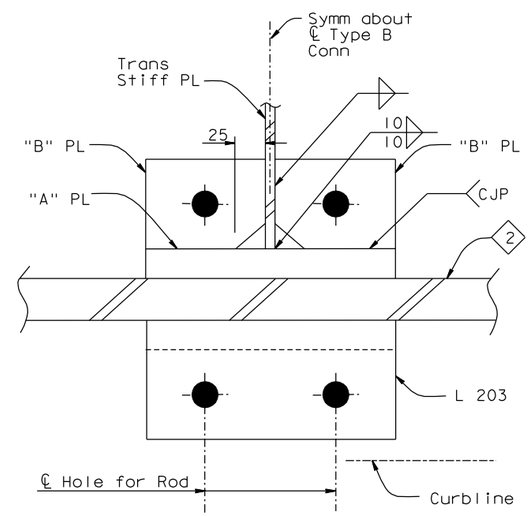

SECTION C-C
1:2.5

NOTES:

1. For location of typical barrier connection types A, B and C, see "Typical Girder Details No. 12" sheet.
2. For typical barrier details, see "Barrier Details" sheets.
3. For bolt hole deviation due to fit-up tolerance, the minimum acceptable edge distance shall be 28 mm for angles and 32 mm for fabricated plate or cut edges.
4. As a result of mis-drilled holes during fabication, Alternate Section C-C may be used on a Fit-for-purpose basis where edge distance is less than 22 mm. For details not shown, see Section C-C.
5. Snipe PL 10 to clear weld. Grind weld to 10 mm fillet if necessary.
6. Match drill PL 10 bolt hole from deck.

REGISTERED PROFESSIONAL ENGINEER Marwan N. Nader No. C 054426 Exp. 12/31/11 CIVIL STATE OF CALIFORNIA

FOR REVISIONS ONLY

CONTRACT CHANGE ORDER NO. _____
SHEET ____ OF ____

REQUESTS FOR INFORMATION NOT ADDRESSED IN THIS CCO REMAIN IN FORCE

ALL DIMENSIONS ARE IN MILLIMETERS UNLESS OTHERWISE SHOWN

R. Valizadeh/V. Toan/Y.L./W.L./F.C.
DESIGN OVERSIGHT
Roya Valizadeh / Vong Toan / Y. Liu
SIGN OFF DATE 09/14/10

MARK	DATE	DESCRIPTIONS	BY	CH'D	CCO#
2	09/14/10	BARRIER MODIFICATIONS	GB	MN	44
1	04/05/10	BARRIER MODIFICATIONS	GB	MN	44

REVISIONS

	BY	CHECKED
DESIGN	G. Baker	P. Ritchie
DETAILS	C. Mauch	T. McMeans
QUANTITIES	G. Baker	M. Roberts

PREPARED FOR THE STATE OF CALIFORNIA DEPARTMENT OF TRANSPORTATION

R. Manzanarez
PROJECT ENGINEER

BRIDGE NO. 34-0006L/R
KILOMETER POST 13.2/13.9

SAN FRANCISCO OAKLAND BAY BRIDGE
EAST SPAN SEISMIC SAFETY PROJECT
SELF-ANCHORED SUSPENSION BRIDGE
(SUPERSTRUCTURE & TOWER)

TYPICAL GIRDER DETAILS NO. 14

Rev. Date: 5-18-98

ORIGINAL SCALE IN MILLIMETERS FOR REDUCED PLANS 0 10 20 30 40 50 60 70 80 90 100

CU 04
EA 0120F1

DISREGARD PRINTS BEARING EARLIER REVISION DATES

REVISION DATES (PRELIMINARY STAGE ONLY) 05/31/01 04/08/02 07/01/02 12/19/02

SHEET 221R2 OF

FILE => I:\bb\04-012001\sas\contract plans and cco\cco\cco#44\19-revision 09-14-10\dgn\agdkd09.dgn

USERNAME => jrivera DATE PLOTTED => 14 SEP 2010 TIME PLOTTED => 13:36:35

100 % PS&E