DIST	COUNTY	ROUTE	KILOMETER POST TOTAL PROJECT	SHEET No.	TOTAL SHEETS
04	SF	80	13.2/13.9	32R1	1204

REGISTERED CIVIL ENGINEER 12/19/02 DATE

12-6-04
PLANS APPROVAL DATE

PARSONS BRINCKERHOFF QUADE & DOUGLAS, INC.
A Parsons Brinckerhoff Company
303 Second St., Suite 700N
San Francisco, CA 94101-1307

LAWRENCE M. JOHNSON No. C 44006 Exp. 6/30/05 CIVIL

The State of California or its officers or agents shall not be responsible for the accuracy or completeness of electronic copies of this plan sheet.

Caltrans now has a web site! To get to the web site, go to http://www.dot.ca.gov

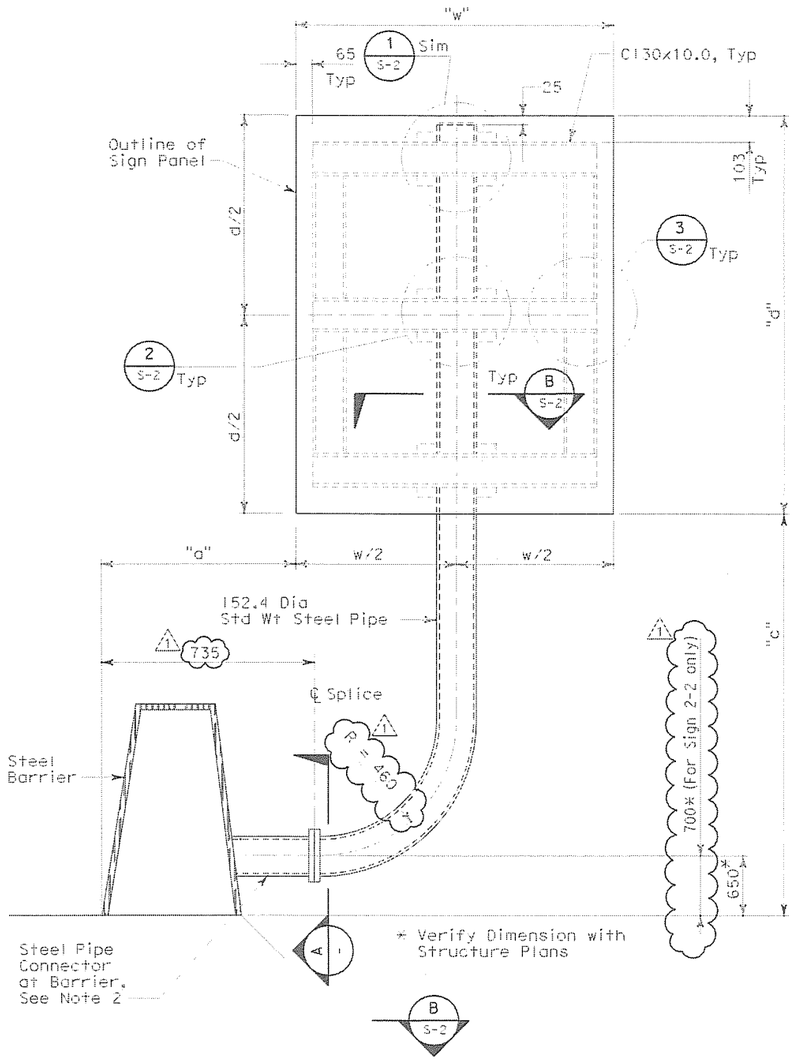

BARRIER MOUNTED SIGNS (TYPE D) DETAILS

Right Side
Left Side Opposite Hand

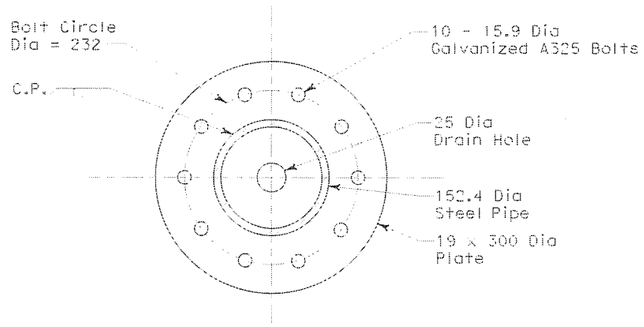

SPLICE

SECTION A -

GENERAL STRUCTURAL NOTES:

1. See S sheets, and "Barrier Mounted Signs" Table" for sign locations and sign panel dimensions.
2. For barrier details and steel pipe connectors at steel barriers, see Structures Plans.
3. Cap top of Steel Pipe. See Detail 1 sheet S-2.
4. All steel shall be galvanized
5. Sign Panels are State furnished.

BARRIER MOUNTED SIGNS

Sign	Sheet	Station (M)	Side	Barrier	Type	"a" (mm)	"c" (mm)	"d" (mm)	"e" (mm)	"w" (mm)
2-1	PD-2	W 57+90	Lt	Steel	D	610	2100	1524	-	1219
2-2	PD-2	W 57+90	Rt	Steel	D	610	2100	1524	-	1219
2-3	PD-2	E 57+50	Rt	Steel	D	610	2100	1524	-	1219
2-4	PD-2	E 57+50	Lt	Steel	D	610	2100	1524	-	1219

REQUEST FOR INFORMATION NOT ADDRESSED IN THIS CCO REMAIN IN FORCE

MARK	DATE	DESCRIPTIONS	BY	CH'D	CCO#
1	03/04/08	BARRIER MODIFICATIONS	RG	LJ SE	44

REVISIONS

CONTRACT CHANGE ORDER NO. _____
SHEET _____ OF _____

LAWRENCE M. JOHNSON No. C 44006 Exp. 6/30/09 CIVIL

FOR REVISION ONLY

ALL DIMENSIONS ARE IN MILLIMETERS UNLESS OTHERWISE SHOWN

SIGN DETAILS

NO SCALE

S-1

STATE OF CALIFORNIA - DEPARTMENT OF TRANSPORTATION
Caltrans

DESIGN OVERSIGHT: Bob Zandipour
CALCULATED/DESIGNED BY: LJ DATE 11/02
CHECKED BY: GVL
REVISED BY
DATE REVISED

FOR REDUCED PLANS ORIGINAL SCALE IS IN MILLIMETERS

CU 04251 EA 0120F1

00-00-00

DIST	COUNTY	ROUTE	KILOMETER POST TOTAL PROJECT	SHEET No	TOTAL SHEETS
04	SF	80	13.2/13.9	72R1	1204

REGISTERED STRUCTURAL ENGINEER — DATE 12/19/02

12-6-04
PLANS APPROVAL DATE

REGISTERED PROFESSIONAL ENGINEER — Mee Shing Owyang — No. 24960 — Exp. 12/31/05 — CIVIL — STATE OF CALIFORNIA

PARSONS BRINCKERHOFF QUADE & DOUGLAS, INC.
303 SECOND STREET, SUITE 700 N
SAN FRANCISCO, CA 94107

The State of California or its officers or agents shall not be responsible for the accuracy or completeness of electronic copies of this plan sheet.

Caltrans now has a web site! To get to the web site, go to http://www.dot.ca.gov

Caltrans Metric.

FRAMING PLAN
SCALE: 1:30

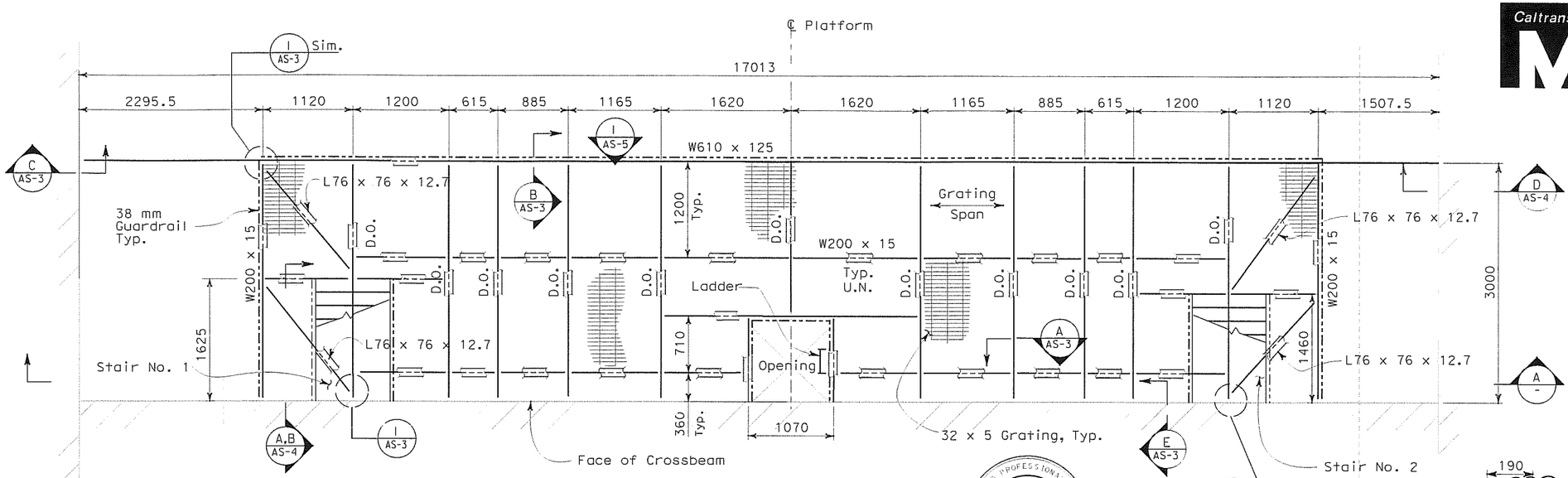

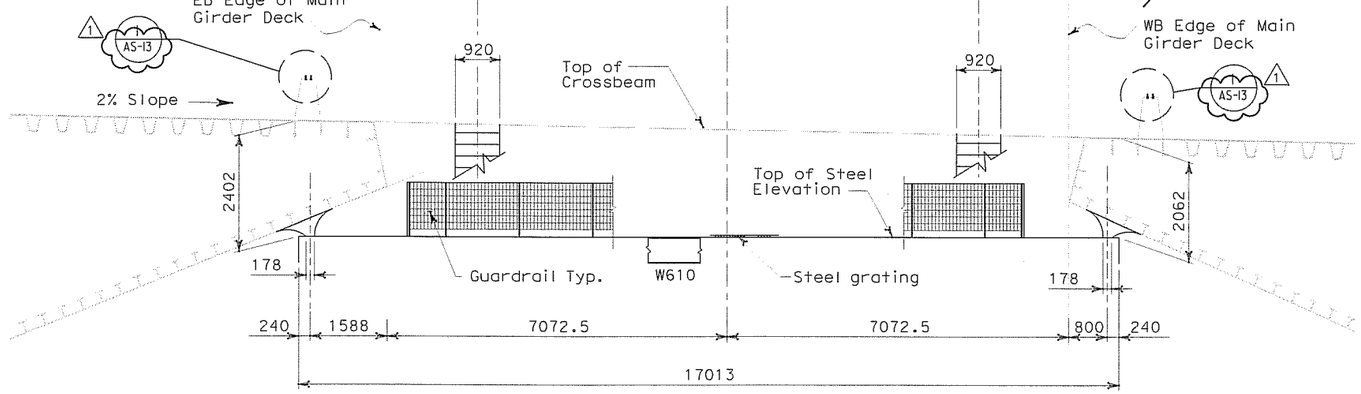

FOR REVISION ONLY

REGISTERED PROFESSIONAL ENGINEER — Mee Shing Owyang — No. 24960 — Exp. 12/31/09 — CIVIL — STATE OF CALIFORNIA

SECTION C
SCALE: 1:5

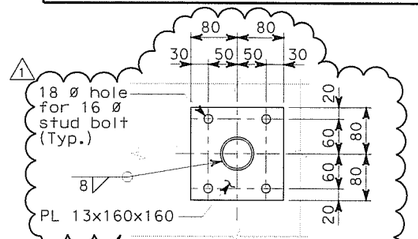

SECTION B
SCALE: 1:10

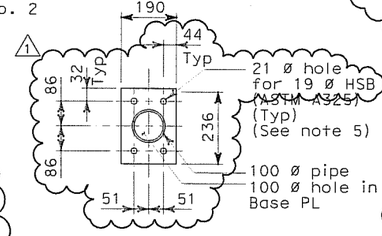

SECTION A
SCALE: 1:60

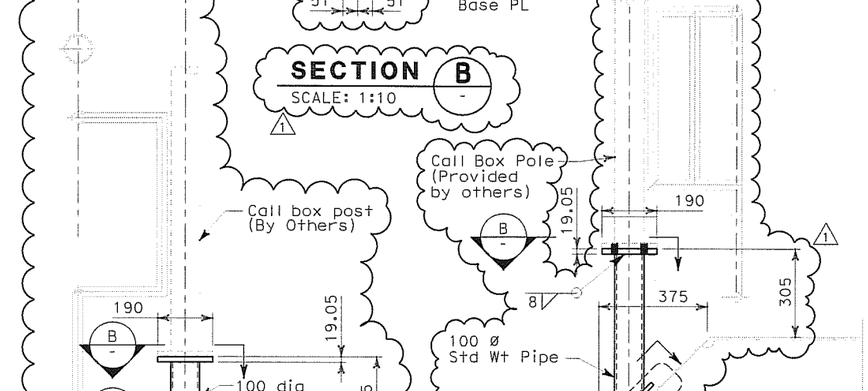

DETAIL 2
SCALE: 1:10
NOTE 5

DETAIL 1
SCALE: 1:10
NOTE 5

ALL DIMENSIONS ARE IN MILLIMETERS UNLESS OTHERWISE SHOWN

NOTES:

1. Total weight of platform 5987 kg
2. The Contractor shall verify all controlling field dimensions before ordering or fabricating any materials.
3. For platform locations, see electrical plans.
4. For anchor bolt locations, spacing and other requirements, see electrical plan.
5. For Call Box locations, see electrical plan (sheet E-397). Bolt hole size and spacings shown are for information only contractor to verify the actual bolt hole size and spacings.

REQUEST FOR INFORMATION NOT ADDRESSED IN THIS CCO REMAIN IN FORCE

MARK	DATE	DESCRIPTIONS	BY	CH'D	CCO#
1	03/04/08	BARRIER MODIFICATIONS.	EL	MI	44

REVISIONS

CONTRACT CHANGE ORDER NO. _____
SHEET _____ OF _____

Bob Zandipour — DESIGN OVERSIGHT	DESIGN	A. Van Felten	M. S. Owyang
4-4-04 — SIGN OFF DATE	DETAILS	A. Van Felten	M. S. Owyang
	QUANTITIES	M.S. Owyang	R. Parrino

PREPARED FOR THE STATE OF CALIFORNIA DEPARTMENT OF TRANSPORTATION

Gene Lusherovich — PROJECT ENGINEER

BRIDGE NO. 34-0006
KILOMETER POST 13.2/13.9

CU 04251
EA 0120F1

SAS SUPERSTRUCTURE
SERVICE PLATFORM FRAMING PLAN
AS-2

DESIGN DETAIL SHEET (METRIC) (REV. 3/1/98)

ORIGINAL SCALE IN MILLIMETERS FOR REDUCED PLANS 0 10 20 30 40 50 60 70 80 90 100

DISREGARD PRINTS BEARING EARLIER REVISION DATES →

REVISION DATES (PRELIMINARY STAGE ONLY)

SHEET ___ OF ___

SFREQUEST

USERNAME = \\flortco DATE PLOTTED = 6/20/2008 TIME PLOTTED = 5:17:52 PM

FILE = \\f:\13103\MS\pse\SAS Struc\CCO\SAS CC044\2008-05-22_Resubmittal\04-0120f1_0072R01.dgn

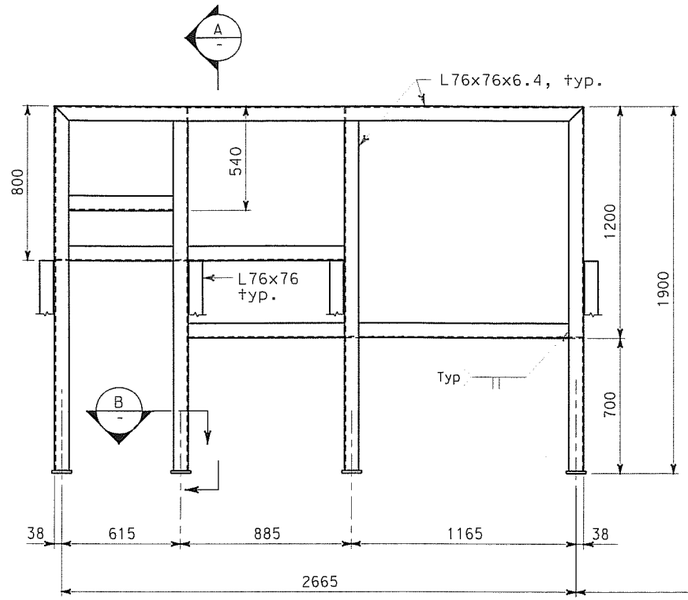

TYPE I

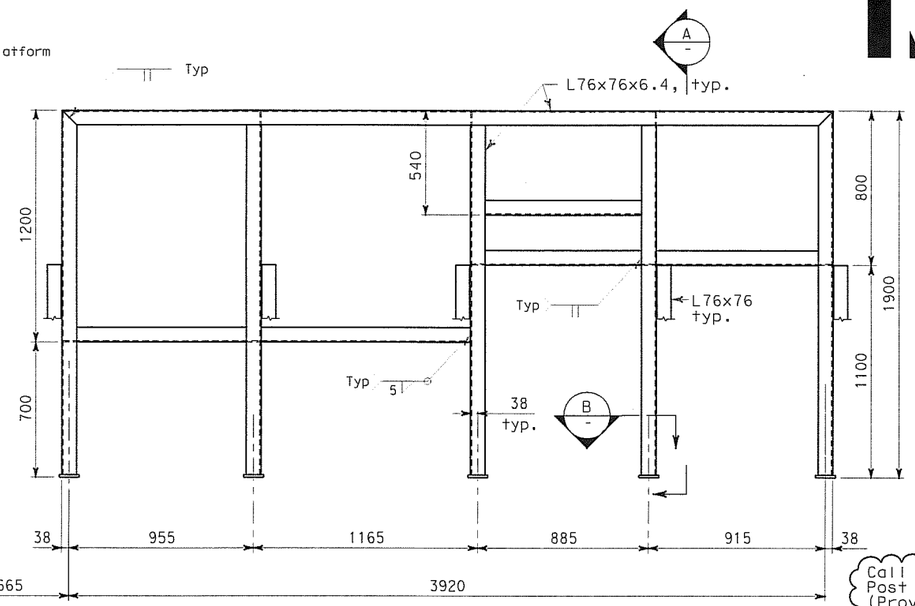

TYPE II

ELECTRICAL PANEL SUPPORT

SCALE: 1:15

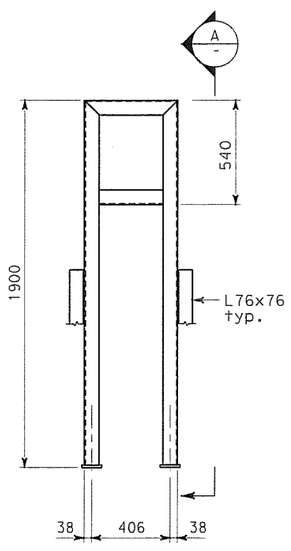

TYPE III

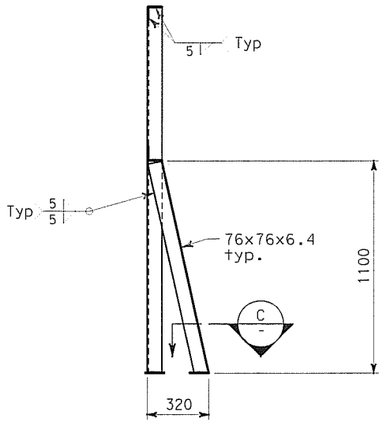

TYP @ EACH LEG

A SECTION
SCALE: 1:15

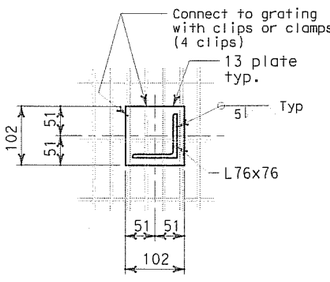

B SECTION
SCALE: 1:5

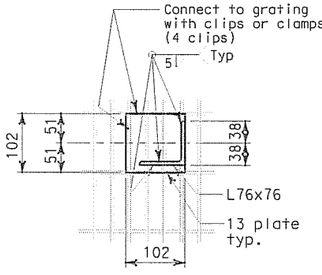

C SECTION
SCALE: 1:5

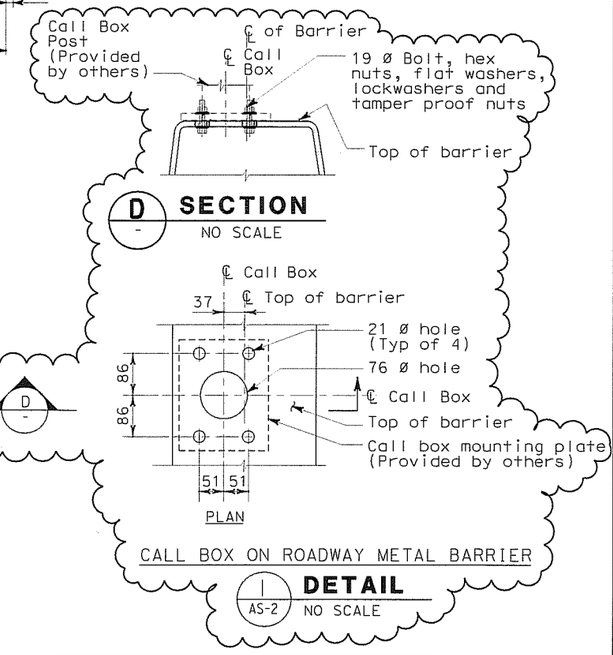

NOTES:

1. The contractor shall verify all controlling field dimensions before ordering or fabricating any material.
2. For structural notes, see sheet AS-1.
3. For electrical panel support locations, see electrical plans.
4. For call box locations, see electrical sheet E-397. (1)

FOR REVISION ONLY

ALL DIMENSIONS ARE IN MILLIMETERS UNLESS OTHERWISE SHOWN

DIST	COUNTY	ROUTE	KILOMETER POST TOTAL PROJECT	SHEET NO.	TOTAL SHEETS
04	SF	80	13.2/13.9	83R1	1204

REGISTERED STRUCTURAL ENGINEER — DATE 12/19/02

Mee Shing Owyang, No. 24960, Exp. 12/31/05, CIVIL, REGISTERED PROFESSIONAL ENGINEER, STATE OF CALIFORNIA

12-6-04
PLANS APPROVAL DATE

PARSONS BRINCKERHOFF QUADE & DOUGLAS, INC.
303 SECOND STREET, SUITE 700 N
SAN FRANCISCO, CA 94107

The State of California or its officers or agents shall not be responsible for the accuracy or completeness of electronic copies of this plan sheet.

Caltrans now has a web site! To get to the web site, go to http://www.dot.ca.gov

REQUEST FOR INFORMATION NOT ADDRESSED IN THIS CCO REMAIN IN FORCE					
1	03/04/08	BARRIER MODIFICATIONS.	EL	MI	44
MARK	DATE	DESCRIPTIONS	BY	CH'D	CCO#
REVISIONS					

CONTRACT CHANGE ORDER NO. _____
SHEET _____ OF _____

Bob Zandipour
DESIGN OVERSIGHT
4-14-04
SIGN OFF DATE

DESIGN	BY I. Horton	CHECKED M. S. Owyang	
DETAILS	BY D. Chin	CHECKED M. S. Owyang	
QUANTITIES	BY I. Horton	CHECKED P. McNamee	

PREPARED FOR THE STATE OF CALIFORNIA
DEPARTMENT OF TRANSPORTATION

Gene Lusherovich
PROJECT ENGINEER

BRIDGE NO.	SAS SUPERSTRUCTURE
34-0006	
KILOMETER POST 13.2/13.9	ELECTRICAL PANEL SUPPORT & SECTIONS — AS-13

DESIGN DETAIL SHEET (METRIC) (REV. 3/1/98)

ORIGINAL SCALE IN MILLIMETERS FOR REDUCED PLANS 0 10 20 30 40 50 60 70 80 90 100

CU 04251
EA 0120F1

DISREGARD PRINTS BEARING EARLIER REVISION DATES

REVISION DATES (PRELIMINARY STAGE ONLY) | SHEET | OF

FILE = f:\f3103\MS\pse\SAS Struc\CCO\SAS CC044\2008-05-22_Resubmittal\04-0120f1_0083R01.dgn

USERNAME => florico DATE PLOTTED => 6/20/2008 TIME PLOTTED => 5:18:49 PM

$FREQUEST

DIST	COUNTY	ROUTE	KILOMETER POST TOTAL PROJECT	SHEET No	TOTAL SHEETS
04	SF	80	13.2/13.9	118 R2	1204

REGISTERED ELECTRICAL ENGINEER — 12/19/02 DATE

REGISTERED PROFESSIONAL ENGINEER — JENS ERLINGSSON No. 8249 Exp. 9/30/06 ELECTRICAL — STATE OF CALIFORNIA

12-6-04
PLANS APPROVAL DATE

PB POWER, Inc.
A Parsons Brinckerhoff Company
303 Second St., Suite 700N
San Francisco, CA 94107-1317

The State of California or its officers or agents shall not be responsible for the accuracy or completeness of electronic copies of this plan sheet.

Caltrans now has a web site! To get to the web site, go to http://www.dot.ca.gov

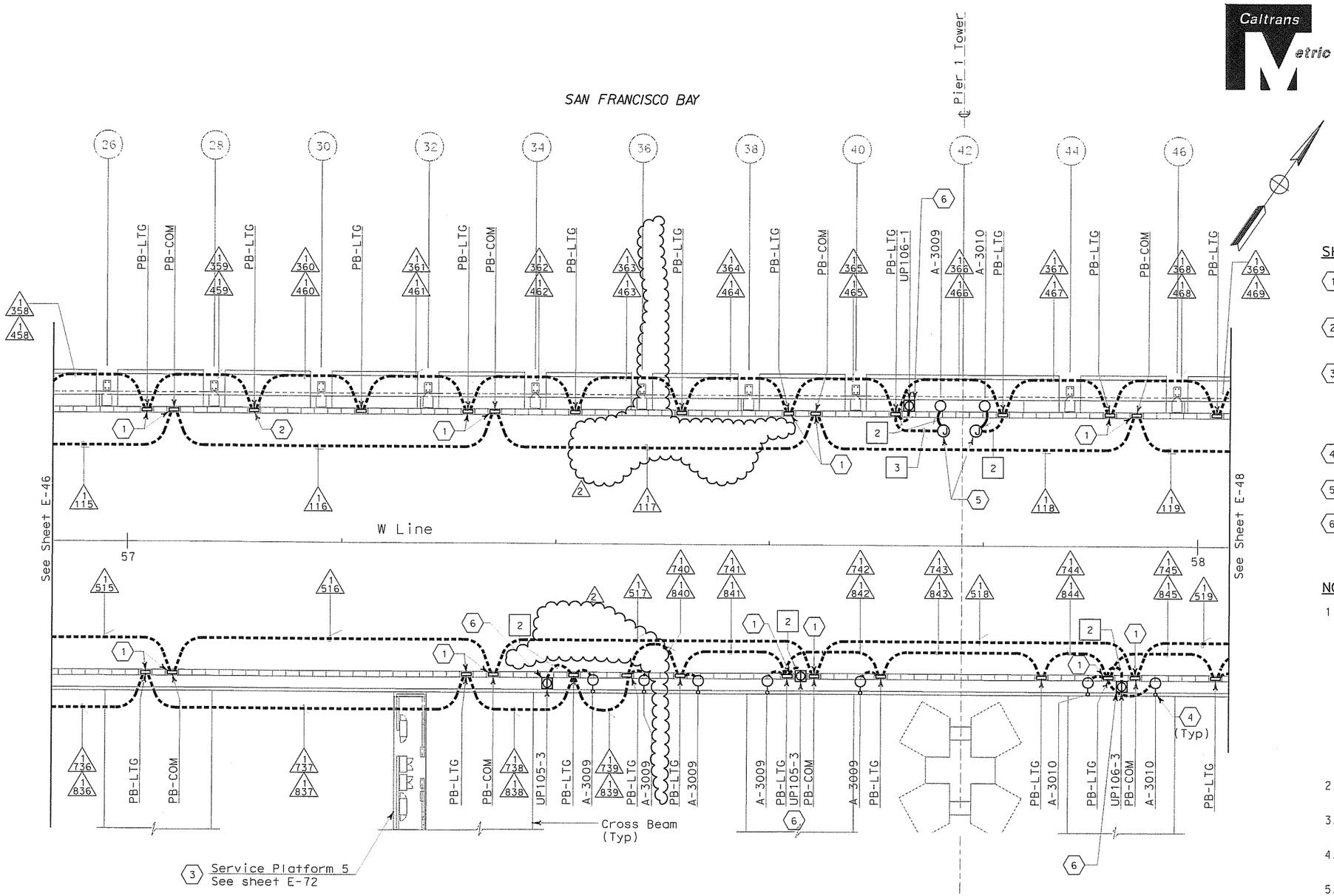

SHEET NOTES:

1. Conduit from barrier pullbox or other equipment down into Girder, See sheet E-97.
2. For conduit to Suspend Lighting, See sheet E-227. Typ for all PB-LTG located on the north side of the roadway.
3. Contractor shall furnish and install UP-105 per sheet E-72. For complete scope of work on platform and other related work not shown on this sheet, see Electrical Special Provisions.
4. See sheet E-67 for pylon floodlight conduit location.
5. Type PB-1C junction box is used on suspender brackets.
6. Roadway Barrier Receptacle, see Detail 1, sheet E-68.

NOTES:

1. References:
   - For typical details and locations of conduit connections to light poles, barrier outlet boxes, call boxes, overhead sign lighting, CCTV and MVDS, see sheets E-67, E-68 and E-68.
   - TOS equipment is shown for conduit routing only. For typical details of TOS controller and devices, see sheets E-344 through E-357.
   - For types of pullboxes, splice boxes and enclosures, see sheet E-83.
   - For circuit and conduit/cable tray schedules, see sheets starting at E-401.
2. For Roadway Call Boxes, refer to sheet E-396.
3. For Roadway Level Lighting Pole Schedule, see sheet E-82.
4. For Roadway Level Call Box Schedule, see sheet E-397.
5. For number of lighting fixtures (main tower lights), see lighting schedule sheets E-271 and E-272.

REGISTERED PROFESSIONAL ENGINEER — S. A. ESTOQUE JR. No. E-10151 Exp. 12/31/2008 ELECTRICAL — STATE OF CALIFORNIA

FOR REVISION ONLY

REQUEST FOR INFORMATION NOT ADDRESSED IN THIS CCO REMAIN IN FORCE					
2	03/04/08	BARRIER MODIFICATIONS	JS BM	RG SE	44
1	02/19/08	ELECTRICAL MODIFICATIONS	MP EL	RR	42
MARK	DATE	DESCRIPTIONS REVISIONS	BY	CH'D	CCO#

CONTRACT CHANGE ORDER NO. _____
SHEET _____ OF _____

CONDUIT PLAN

SAS SUPERSTRUCTURE ROADWAY WESTBOUND
LIGHTING AND ELECTRICAL SYSTEMS

SCALE 1:200

E-47

THIS PLAN IS ACCURATE FOR ELECTRICAL WORK ONLY.

STATE OF CALIFORNIA - DEPARTMENT OF TRANSPORTATION — Caltrans

DESIGN OVERSIGHT — BEHZAD GOLEMOHAMMADI

CALCULATED/ DESIGNED BY	FK	DATE 8/02	REVISED BY
CHECKED BY	IAH	8/02	DATE REVISED

LAST REVISION 00-00-00 — DATE PLOTTED => 5/22/2008 — TIME PLOTTED => 10:38:45 AM

FOR REDUCED PLANS ORIGINAL SCALE IS IN MILLIMETERS — 0 20 40 60 80

DGN FILE = T:\13103\MS\pse\SAS Struc\CCO\SAS CCO44\04-0120f1_01 8R02.dgn
USERNAME = tlorico

CU 04251 — EA 0120F1

DIST	COUNTY	ROUTE	KILOMETER POST TOTAL PROJECT	SHEET No.	TOTAL SHEETS
04	SF	80	13.2/13.9	121 R2	1204

Jens Erlingsson 12/19/02
REGISTERED ELECTRICAL ENGINEER DATE

12-6-04
PLANS APPROVAL DATE

REGISTERED PROFESSIONAL ENGINEER — JENS ERLINGSSON No. 8249 Exp. 9/30/06 ELECTRICAL — STATE OF CALIFORNIA

PB POWER, Inc.
A Parsons Brinckerhoff Company
303 Second St., Suite 700N
San Francisco, CA 94107-1317

The State of California or its officers or agents shall not be responsible for the accuracy or completeness of electronic copies of this plan sheet.

Caltrans now has a web site! To get to the web site, go to http://www.dot.ca.gov

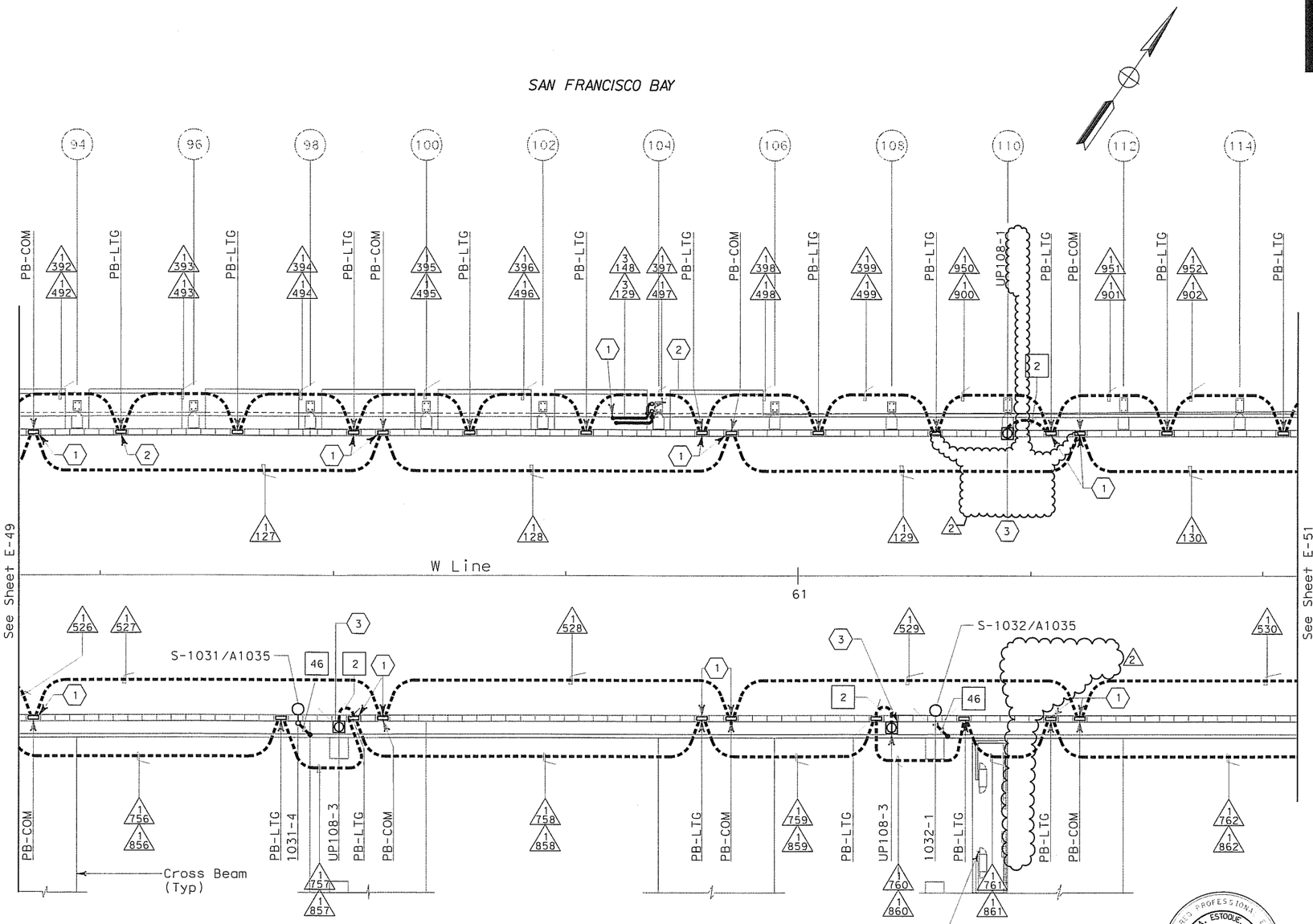

CONDUIT PLAN

SHEET NOTES:

1. Conduit from barrier pullbox or other equipment down into Girder, See sheet E-100.
2. For conduit to Suspend Lighting, See sheet E-230.
3. Roadway Barrier Receptacle, see Detail 1, sheet E-68.

NOTES:

1. References:
   - For typical details and locations of conduit connections to light poles, barrier outlet boxes, call boxes, overhead sign lighting, CCTV and MVDS, see sheets E-66, E-67 and E-68.
   - TOS equipment is shown for conduit routing only. For typical details of TOS controller and devices, see sheets E-344 through E-357.
   - For types of pullboxes, splice boxes and enclosures, see sheet E-83.
   - For circuit and conduit/cable tray schedules, see sheets starting at E-401.
2. For Roadway Call Boxes refer to sheet E-396.
3. For Roadway Level Lighting Pole Schedules, see sheet E-82.
4. For Roadway Level Call Box Schedule, see sheet E-397.
5. For number of lighting fixtures (main tower lights), see lighting schedule sheets E-271 and E-272.

REGISTERED PROFESSIONAL ENGINEER — S. A. ESTOQUE, JR. No. E-10151 Exp. 12/31/2008 ELECTRICAL — STATE OF CALIFORNIA

FOR REVISION ONLY

REQUEST FOR INFORMATION NOT ADDRESSED IN THIS CCO REMAIN IN FORCE					
2	03/04/08	BARRIER MODIFICATIONS	JS BM	RG SE	44
1	02/19/08	ELECTRICAL MODIFICATIONS	MP EL	RR	42
MARK	DATE	DESCRIPTIONS	BY	CH'D	CCO#
REVISIONS					

CONTRACT CHANGE ORDER NO. _____
SHEET _____ OF _____

SAS SUPERSTRUCTURE ROADWAY WESTBOUND
LIGHTING AND ELECTRICAL SYSTEMS

SCALE 1:200

E-50

THIS PLAN IS ACCURATE FOR ELECTRICAL WORK ONLY.

CALCULATED/ DESIGNED BY	FK	DATE 8/02	REVISED BY
CHECKED BY	IAH	8/02	DATE REVISED

DESIGN OVERSIGHT
BEHZAD GOLEMOHAMMADI

STATE OF CALIFORNIA - DEPARTMENT OF TRANSPORTATION
Caltrans

DATE PLOTTED => 5/22/2008
TIME PLOTTED => 10:39:14 AM
LAST REVISION 00-00-00

FOR REDUCED PLANS ORIGINAL SCALE IS IN MILLIMETERS 0 20 40 60 80

DGN FILE = T:\13103\MS\pse\SAS Struc\CCO\SAS CCO44\04-0120F1_0121R02.dgn
USERNAME = rlorico

CU 04251 EA 0120F1

UTILITY PANEL UP-105 (CKT #1096)

Location: SAS SUPERSTRUCTURE SERVICE PLATFORM 5

LOAD DESCRIPTION	LTG	REC	OTH.	CB		CB	LTG	REC	OTH.	LOAD DESCRIPTION
Spare				20/1	1 A 2	20/1				Spare (1)
Recept (2) Westbound South Barrier		360		20/1	3 B 4	20/1				Spare
Recept (2) Service Platform #5		360		20/1	5 C 6	20/1				Spare
Recept (2) Girder		360		20/1	7 A 8	20/1	738			Girder Lighting (18)
Recept (4) Crossbeams		720		20/1	9 B 10	20/1	820			Crossbeam Ltg (20)
RTU #10W (PLC Power Supply)			100	20/1	11 C 12	20/1			900	Strong Motion Recorder #2 Box A
RTU #10W (Lighting & Receptacle)	105	180	150	20/1	13 A 14	20/1			300	Strong Motion Recorder #2 Box B
Navigation Relay Cabinet #NAP-5			600	20/1	15 B 16	20/1				Spare
Spare				20/1	17 C 18	20/1				
				20/1	19 A 20	20/1				
				20/1	21 B 22	20/1				
↓				20/1	23 C 24	20/1				↓
TOTAL VA	105	1980	850				1558	(1)	1200	TOTAL VA

LOAD SUMMARY (INCLUDES .90 PF) (VA)

Lighting (At 100%): 1663
Gen Use (1st 10 kVA AT 100% Plus 50% of remainder): 4050

(1) TOTAL kVA: 5.693

BALANCE (kVA)

Phase A - 1.833
Phase B - 2.500 (1)
Phase C - 1.360

VOLTAGE: 208Y/120 V
PHASE/WIRES: 3-phase, 4-wire
BUS RATING: 100 A
MAIN: 60 A
MOUNTING: Surface
K.A.I.C.: 10

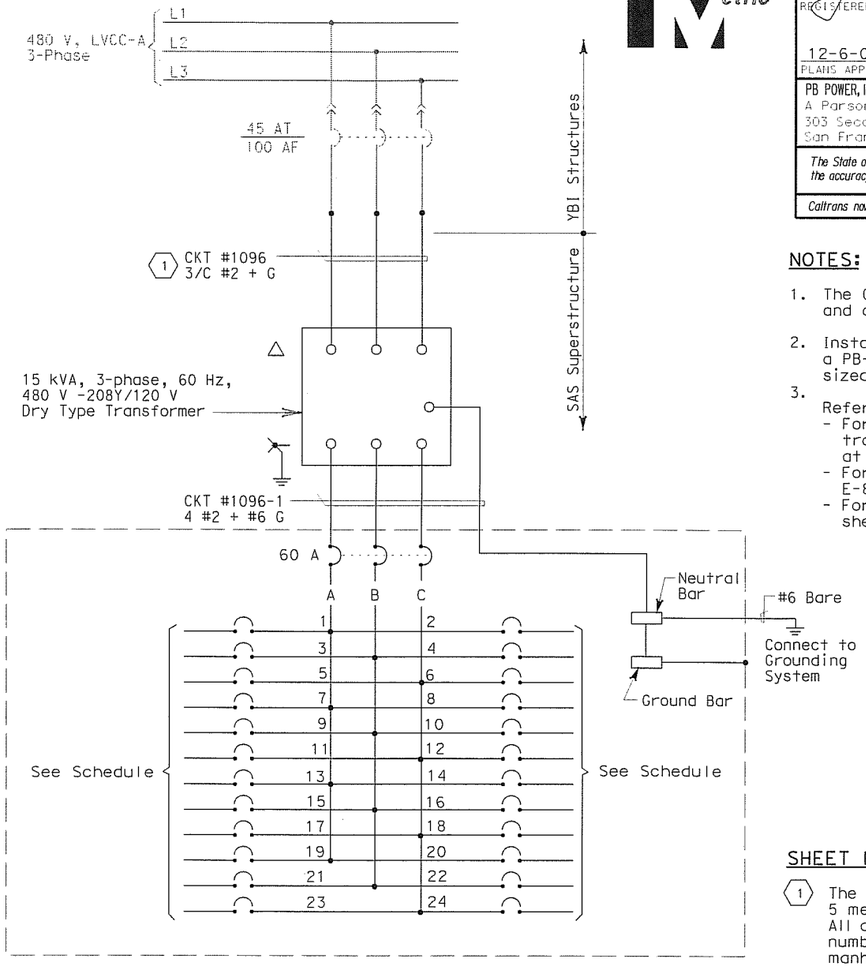

NOTES:

1. The Contractor shall provide nameplates and circuit schedules as shown.
2. Install panelboard inside a PB-8A enclosure (fiberglass) to be sized by the Contractor.
3. References:
   - For circuit and conduit/cable tray schedules, see sheets starting at E-401.
   - For pull box schedule, see sheet E-83.
   - For crossbeam lighting plan, see sheet E-119.

SHEET NOTES:

(1) The Contractor shall extend and coil 5 meters of cable in manhole 25. All cables shall be tagged with circuit numbers as shown. For location of manhole 25, see sheet E-11.

DIST	COUNTY	ROUTE	KILOMETER POST TOTAL PROJECT	SHEET No.	TOTAL SHEETS
04	SF	80	13.2/13.9	127 R1	1204

JENS ERLINGSSON 12/19/02
REGISTERED ELECTRICAL ENGINEER DATE

REGISTERED PROFESSIONAL ENGINEER — JENS ERLINGSSON No. 8249 Exp. 9/30/06 ELECTRICAL — STATE OF CALIFORNIA

12-6-04
PLANS APPROVAL DATE

PB POWER, Inc.
A Parsons Brinckerhoff Company
303 Second St., Suite 700N
San Francisco, CA 94107-1317

The State of California or its officers or agents shall not be responsible for the accuracy or completeness of electronic copies of this plan sheet.

Caltrans now has a web site! To get to the web site, go to http://www.dot.ca.gov

REGISTERED PROFESSIONAL ENGINEER — S. A. ESTOQUE, JR. No. E-10151 Exp. 12/31/2008 ELECTRICAL — STATE OF CALIFORNIA

FOR REVISION ONLY

REQUEST FOR INFORMATION NOT ADDRESSED IN THIS CCO REMAIN IN FORCE					
MARK	DATE	REVISIONS DESCRIPTIONS	BY	CH'D	CCO#
(1)	03/04/08	BARRIER MODIFICATIONS	JS BM	RG SE	44

CONTRACT CHANGE ORDER NO. _____
SHEET _____ OF _____

DETAILS
SAS SUPERSTRUCTURE ROADWAY WESTBOUND
PANEL UP-105 SCHEDULE

E-60

THIS PLAN IS ACCURATE FOR ELECTRICAL WORK ONLY.

STATE OF CALIFORNIA - DEPARTMENT OF TRANSPORTATION
Caltrans
DESIGN OVERSIGHT: BEHZAD GOLEMOHAMMADI
CALCULATED/DESIGNED BY: JP
CHECKED BY: BL
DATE REVISED: 08/01
REVISED BY: II/01

LAST REVISION 00-00-00
DATE PLOTTED = 5/22/2008
TIME PLOTTED = 10:39:58 AM

FOR REDUCED PLANS ORIGINAL SCALE IS IN MILLIMETERS 0 20 40 60 80

DGN FILE = T:\13103\MS\pse\SAS Struc\CCO\SAS CC044\04-0120f1_0127R01.dgn
USERNAME = rflorico

CU 04251 EA 0120F1

UTILITY PANEL UP-108 (CKT #1099)

Location: SAS SUPERSTRUCTURE SERVICE PLATFORM 8

LOAD DESCRIPTION	LTG	REC	OTH.	CB		CB	LTG	REC	OTH.	LOAD DESCRIPTION
Recept (1) Westbound North Barrier		180		20/1	1 A 2	20/1			10	CB-143A
Recept (3) Westbound South Barrier		540		20/1	3 B 4	20/1			10 (1)	CB-143B (1)
Recept (2) Service Platform #8		360		20/1	5 C 6	20/1				Spare
Recept (3) Girder		540		20/1	7 A 8	20/1	984			Girder Ltg. (24)
Recept (6) Crossbeams		1080		20/1	9 B 10	20/1	738			Crossbeam Ltg (20)
RTU #11W (Lighting & Receptacle)	105	180	150	20/1	11 C 12	20/1	820			Crossbeam Ltg (20)
Recept (1) Crossbeams		180		20/1	13 A 14	20/1				Spare
Spare				20/1	15 B 16	20/1				Spare
RTU #11W (PLC Power Supply)			100	20/1	17 C 18	20/1				
Spare				20/1	19 A 20	20/1				
				20/1	21 B 22	20/1				
				20/1	23 C 24	20/1				
TOTAL VA	105	3060	250				2542		(1) 20	TOTAL VA

LOAD SUMMARY (INCLUDES .90 PF) (VA)

Lighting (At 100%): 2647
Gen Use (1st 10 kVA AT 100% Plus 50% of remainder): 3350

TOTAL kVA: 5.977 (1)

BALANCE (kVA)

Phase A - 1.884 (1)
Phase B - 2.358
Phase C - 1.715

VOLTAGE: 208Y/120 V
PHASE/WIRES: 3-phase, 4-wire
BUS RATING: 100 A
MAIN: 60 A
MOUNTING: Surface
K.A.I.C.: 10

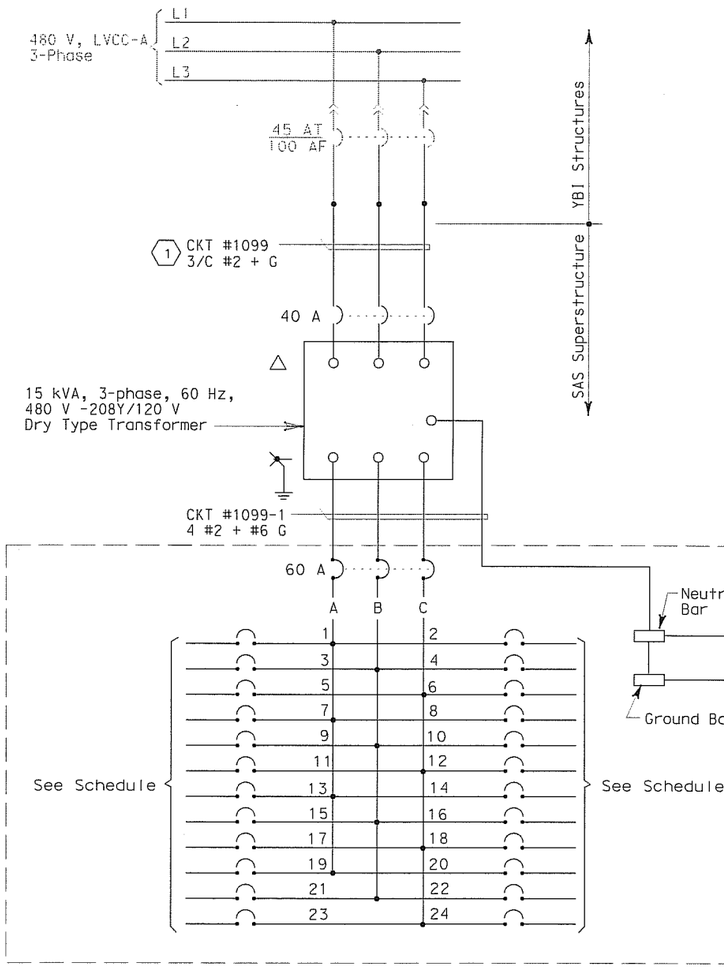

NOTES:

1. The Contractor shall provide nameplates and circuit schedules as shown.
2. Install transformer/panelboard inside a PB-8A enclosure (fiberglass) to be sized by the Contractor.
3. References:
   - For circuit and conduit/cable tray schedules, see sheets starting at E-401.
   - For pull box schedule, see sheet E-83.
   - For crossbeam lighting plan, see sheet E-119.

SHEET NOTES:

(1) The Contractor shall extend and coil 5 meters of cable in manhole 25. All cables shall be tagged with circuit numbers as shown. For location of manhole 25, see sheet E-11.

DIST	COUNTY	ROUTE	KILOMETER POST TOTAL PROJECT	SHEET No	TOTAL SHEETS
04	SF	80	13.2/13.9	130 R1	1204

Jens Erlingsson 12/19/02
REGISTERED ELECTRICAL ENGINEER DATE

JENS ERLINGSSON No. 8249 Exp. 9/30/06 ELECTRICAL — REGISTERED PROFESSIONAL ENGINEER — STATE OF CALIFORNIA

12-6-04
PLANS APPROVAL DATE

PB POWER, Inc.
A Parsons Brinckerhoff Company
303 Second St., Suite 700N
San Francisco, CA 94107-1317

The State of California or its officers or agents shall not be responsible for the accuracy or completeness of electronic copies of this plan sheet.

Caltrans now has a web site! To get to the web site, go to http://www.dot.ca.gov

S. A. ESTOQUE, JR. No. E-10151 Exp. 12/31/2008 ELECTRICAL — REGISTERED PROFESSIONAL ENGINEER — STATE OF CALIFORNIA

FOR REVISION ONLY

REQUEST FOR INFORMATION NOT ADDRESSED IN THIS CCO REMAIN IN FORCE						
MARK	DATE	DESCRIPTIONS	BY	CH'D	CCO#	
		REVISIONS				
(1)	03/04/08	BARRIER MODIFICATIONS	JS BM	RG SE	44	

CONTRACT CHANGE ORDER NO. _____
SHEET _____ OF _____

DETAILS
SAS SUPERSTRUCTURE ROADWAY WESTBOUND
PANEL UP-108 SCHEDULE

NO SCALE

E-63

THIS PLAN IS ACCURATE FOR ELECTRICAL WORK ONLY.

STATE OF CALIFORNIA - DEPARTMENT OF TRANSPORTATION
Caltrans
DESIGN OVERSIGHT
BEHZAD GOLEMOHAMMADI

CALCULATED/ DESIGNED BY	CHECKED BY	DATE	REVISED BY	DATE REVISED
JP	BL	08/01	EJL	2/04

LAST REVISION 00-00-00
DATE PLOTTED = 5/22/2008
TIME PLOTTED = 10:40:15 AM

FOR REDUCED PLANS ORIGINAL SCALE IS IN MILLIMETERS 0 20 40 60 80

DGN FILE = T:\13103\MS\pse\SAS Struc\CCO\SAS CCO44\04-0120F1_013OR01.dgn
USERNAME = tlorico

CU 04251 EA 0120F1

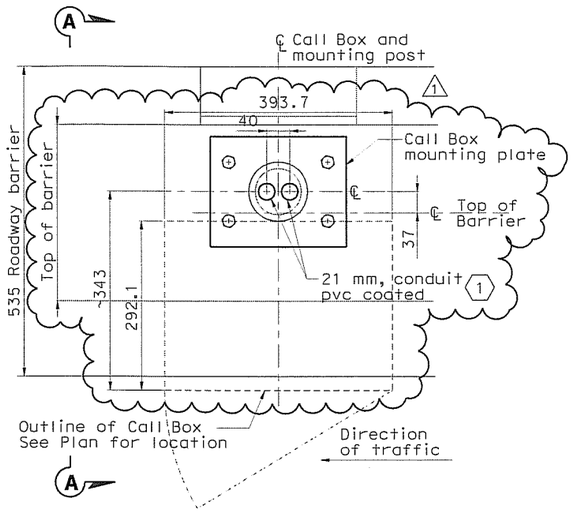

PLAN

CONDUIT STUB AND MOUNTING
OF CALL BOX AT BARRIER
SCALE 1:4

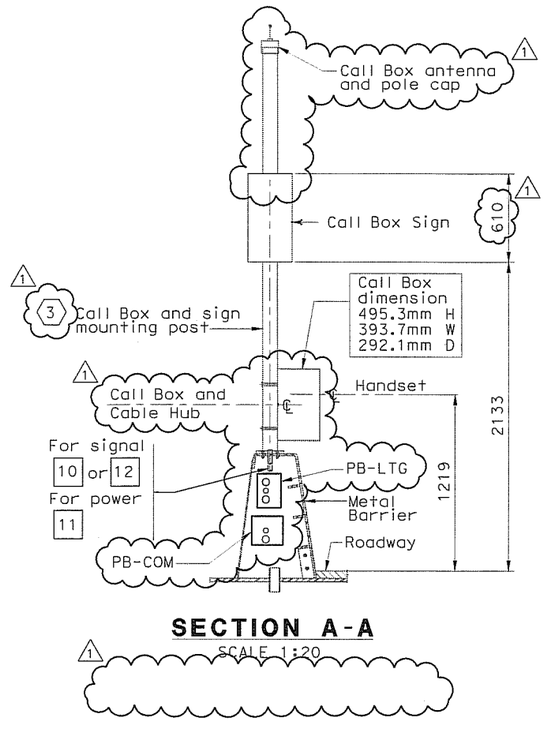

SECTION A-A

1 SCALE 1:20

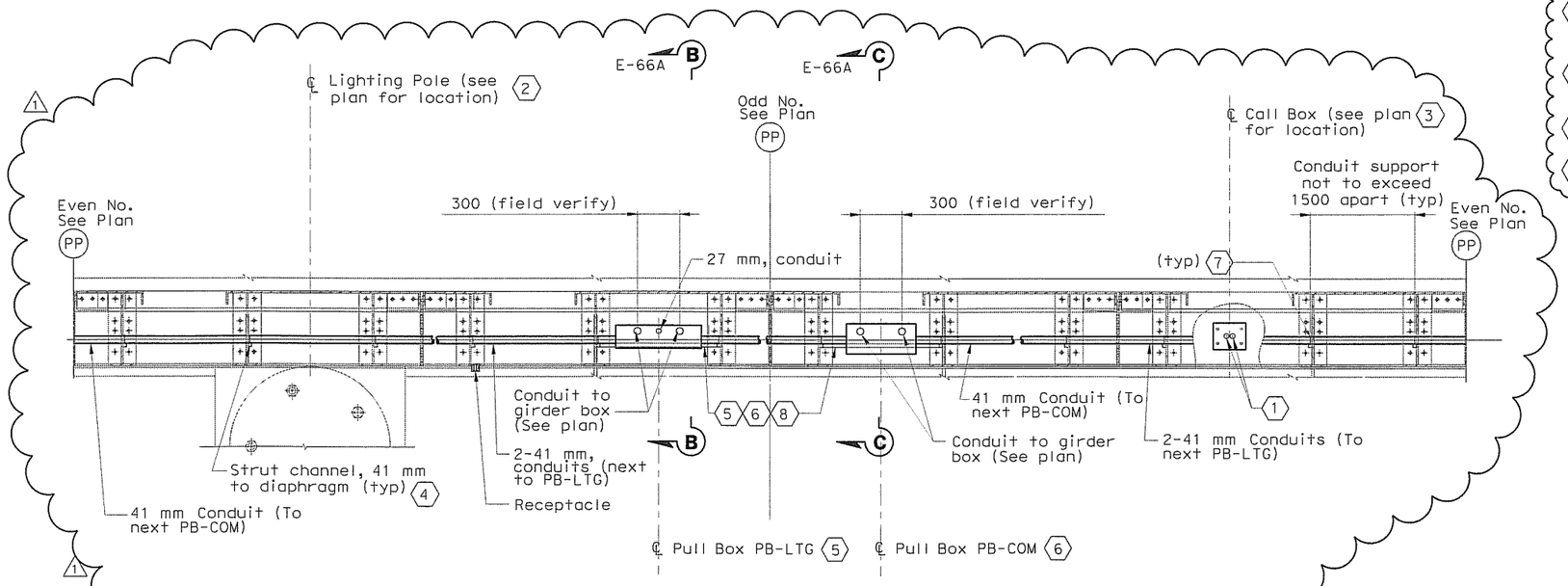

PLAN-TYPICAL PULL BOX AND CONDUIT LOCATIONS

(CONDUITS INSIDE STEEL BARRIER TYPE 732 MODIFIED)
SCALE 1:20

Caltrans Metric

DIST	COUNTY	ROUTE	KILOMETER POST TOTAL PROJECT	SHEET No	TOTAL SHEETS
04	SF	80	13.2/13.9	131 R1	1204

Jens Erlingsson 12/19/02
REGISTERED ELECTRICAL ENGINEER DATE

12-6-04
PLANS APPROVAL DATE

REGISTERED PROFESSIONAL ENGINEER — JENS ERLINGSSON No. 8249 Exp. 9/30/06 ELECTRICAL — STATE OF CALIFORNIA

PB POWER, Inc.
A Parsons Brinckerhoff Company
303 Second St., Suite 700N
San Francisco, CA 94107-1317

The State of California or its officers or agents shall not be responsible for the accuracy or completeness of electronic copies of this plan sheet.

Caltrans now has a web site! To get to the web site, go to http://www.dot.ca.gov

NOTES:

1. References:
   - For pull box schedule, see Sheet E-83.
   - For light pole schedule, see Sheet E-82.
   - ~~For call box schedule, see Sheet E-397~~
1
2. For location of pull boxes inside girder, see Sheet E-96 through E-101.
1 3. For mounting hole detail of call box on roadway metal barrier, see sheet AS-13.

SHEET NOTES:

1. Bond grounding bushing to pole ground lug with #6 bare copper wire.
1 2. For conduit location inside lighting pole, see Sheet E-68.
3. For call box mounting detail, see AS Sheets.
1 4. For typical conduit support locations inside barrier diaphragm, see Details 1, 2, and 3 of Sheet E-66A.
5. Locate Pull Box at approximate center of diaphragm. For typical PB-LTG and conduit support inside barrier diaphragm, see Details 4 and 6 sheet E-66A.
6. Locate Pull Box at approximate center of diaphragm. For typical PB-COM and conduit support inside barrier diaphragm, see Detail 5 sheet E-66A.
7. Provide conduit clamp for each conduit.
8. Strut channel, 41 mm. support for pull box and installed by Contractor.

REGISTERED PROFESSIONAL ENGINEER — S. A. ESTOQUE, JR. No. E-10151 Exp. 12/31/2008 ELECTRICAL — STATE OF CALIFORNIA

FOR REVISION ONLY

REQUEST FOR INFORMATION NOT ADDRESSED IN THIS CCO REMAIN IN FORCE

MARK	DATE	DESCRIPTIONS (REVISIONS)	BY	CH'D	CCO#
1	03/04/08	BARRIER MODIFICATIONS	JS BM	RG SE	44

CONTRACT CHANGE ORDER NO. _____
SHEET _____ OF _____

DETAILS
SAS SUPERSTRUCTURE ROADWAY
CONDUIT AND PULL BOX LOCATIONS

SCALE AS NOTED

E-66

STATE OF CALIFORNIA - DEPARTMENT OF TRANSPORTATION
Caltrans

DESIGN OVERSIGHT: BEHZAD GOLEMOHAMMADI

	CALCULATED/ DESIGNED BY	CHECKED BY	DATE	REVISED BY	DATE REVISED
	FK	IAH	11/02		11/02

LAST REVISION 00-00-00 — DATE PLOTTED => 5/22/2008 TIME PLOTTED => 10:41:30 AM

THIS PLAN IS ACCURATE FOR ELECTRICAL WORK ONLY. ALL DIMENSIONS ARE IN MILLIMETERS UNLESS OTHERWISE SHOWN.

FOR REDUCED PLANS ORIGINAL SCALE IS IN MILLIMETERS 0 20 40 60 80

DGN FILE =>T:\13103\MS\pse\SAS Struc\CCO\SAS CCO44\04-0120F1_013R01.dgn
USERNAME =>florico

CU 04251 EA 0120F1

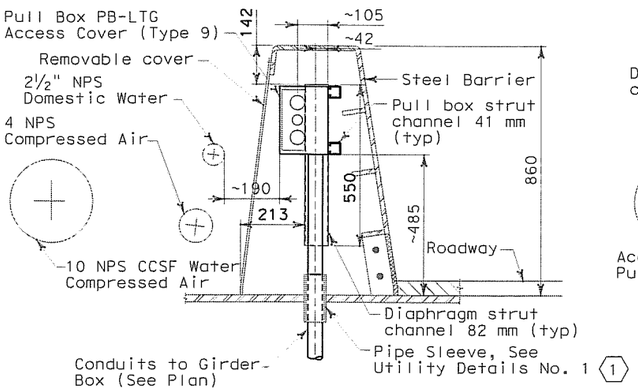

SECTION B-B

TYPICAL PULL BOX PB-LTG
AND CONDUIT LOCATION W5
SCALE 1:10 W2 (SIMILAR)

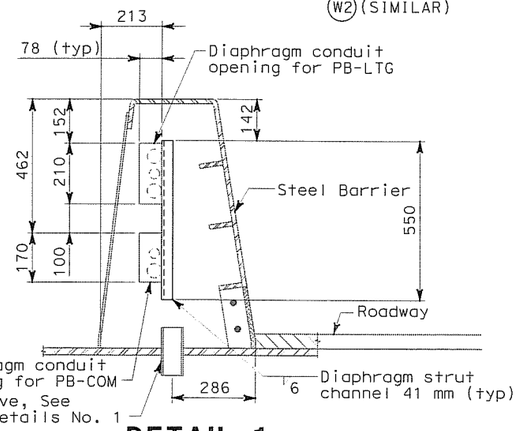

DETAIL 1

TYPICAL CONDUIT SUPPORT
THROUGH DIAPHRAGM W5
SCALE 1:10

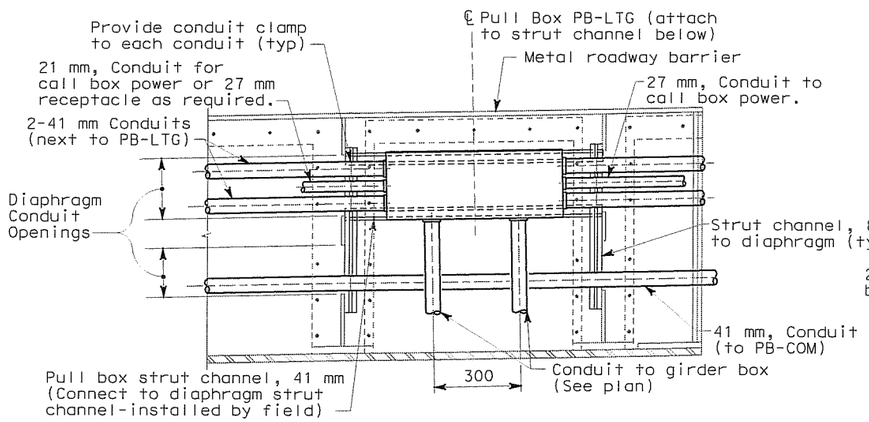

DETAIL 4

TYPICAL CONDUIT SUPPORT
PULL BOX PB-LTG MOUNTING
SCALE 1:10

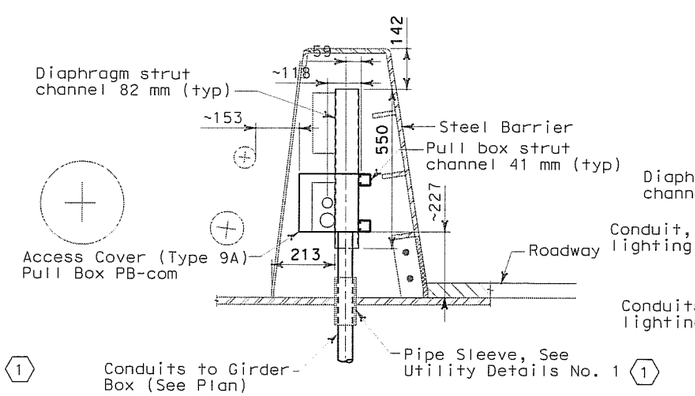

SECTION C-C

TYPICAL PULL BOX PB-COM
AND CONDUIT LOCATION W5
SCALE 1:10 W2 (SIMILAR)

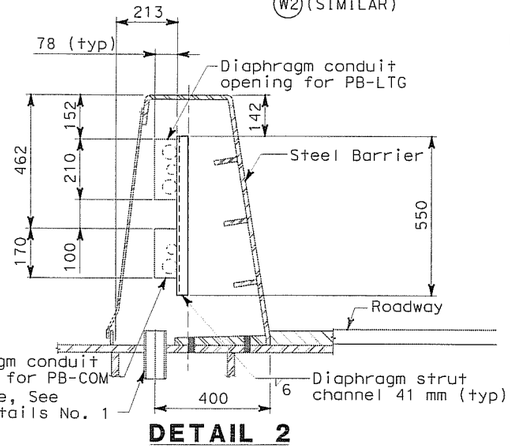

DETAIL 2

TYPICAL CONDUIT SUPPORT
THROUGH DIAPHRAGM W2
SCALE 1:10

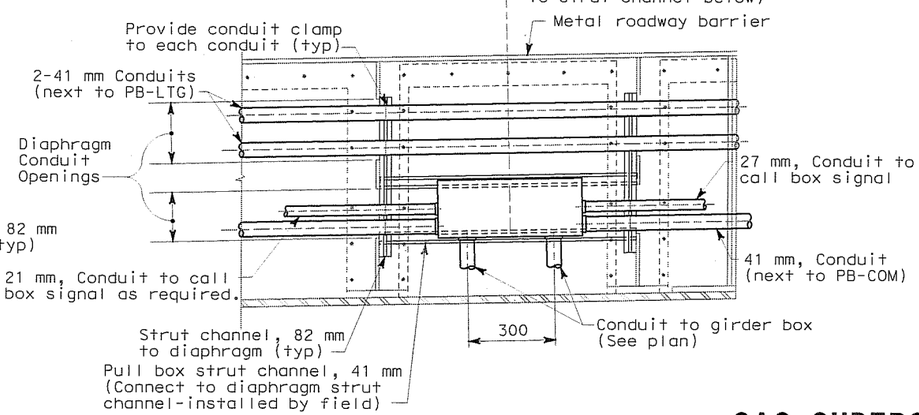

DETAIL 5

TYPICAL CONDUIT SUPPORT
PULL BOX PB-COM MOUNTING
SCALE 1:10

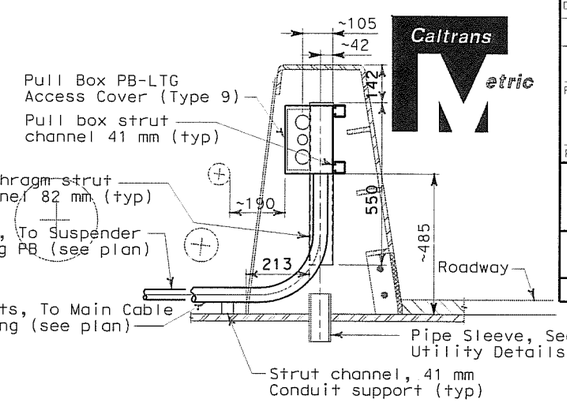

DETAIL 6

TYPICAL CONDUIT LOCATION FROM
PULL BOX PB-LTG TO SUSPENDER AND W5
MAIN CABLE LIGHTING W2 (SIMILAR)
SCALE 1:10

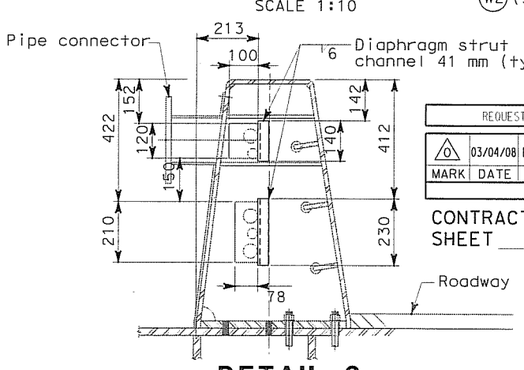

DETAIL 3

AT BARRIER WITH MOUNTED SIGNS
CONDUIT SUPPORT DIAPHRAGM E5 (PP38 + 2.150)
CONDUIT SUPPORT DIAPHRAGM E2 (PP38 + 2.150)
SCALE 1:10

DIST	COUNTY	ROUTE	KILOMETER POST TOTAL PROJECT	SHEET No.	TOTAL SHEETS
04	SF	80	13.2/13.9	131 S1	1204

REGISTERED ELECTRICAL ENGINEER — 9/18/07 DATE

MAXWELL FUMIO TAKAKI — No. E 8651 — Exp. 9/30/2008 — ELECTRICAL — REGISTERED PROFESSIONAL ENGINEER — STATE OF CALIFORNIA

PLANS APPROVAL DATE

PB AMERICAS, Inc.
A Parsons Brinckerhoff Company
303 Second St., Suite 700N
San Francisco, CA 94107-1317

The State of California or its officers or agents shall not be responsible for the accuracy or completeness of electronic copies of this plan sheet.

Caltrans now has a web site! To get to the web site, go to http://www.dot.ca.gov

REQUEST FOR INFORMATION NOT ADDRESSED IN THIS CCO REMAIN IN FORCE

MARK	DATE	REVISIONS DESCRIPTIONS	BY	CH'D	CCO#
0	03/04/08	BARRIER MODIFICATIONS	EL	RG SE	44

CONTRACT CHANGE ORDER NO. _____
SHEET _____ OF _____

NOTES:

1. References:
   - For pull box schedule, see Sheet E-83.
   - For barrier details, see structural drawings.
2. For location of pull boxes inside girder, see Sheet E-96 through E-101.

SHEET NOTES:

1. To prevent moisture from passing inside the sleeve, the Contractor shall install sealant between the sleeve and conduit.
2. Spare pipe sleeves shall be capped on both ends.

DETAILS
SAS SUPERSTRUCTURE ROADWAY CONDUIT AND PULL BOX LOCATIONS

SCALE AS NOTED

E-66A

DATE	BY	REVISED BY	DATE REVISED
11/02	FK	IAH	11/02

CALCULATED/DESIGNED BY
CHECKED BY

DESIGN OVERSIGHT — BEHZAD GOLEMOHAMMADI

STATE OF CALIFORNIA - DEPARTMENT OF TRANSPORTATION — Caltrans

THIS PLAN IS ACCURATE FOR ELECTRICAL WORK ONLY.

ALL DIMENSIONS ARE IN MILLIMETERS UNLESS OTHERWISE SHOWN.

FOR REDUCED PLANS ORIGINAL SCALE IS IN MILLIMETERS 0 20 40 60 80

DGN FILE = T:\13103\MS\pse\SAS Struc\CCO\SAS CCO4d\04-0120f1_013501.dgn
USERNAME = rlorico

CU 04251 | EA 0120F1

LAST REVISION 00-00-00 — DATE PLOTTED = 5/22/2008 — TIME PLOTTED = 10:42:12 AM

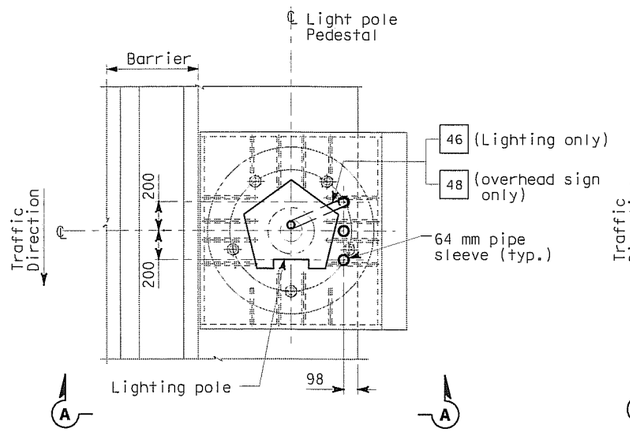

PLAN

CONDUIT STUB-UP PLAN FOR ROADWAY LIGHTING ON A METAL BASE
(SIMILAR FOR OVERHEAD SIGN ON A METAL BASE EXCEPT AS NOTED)
SCALE 1:20

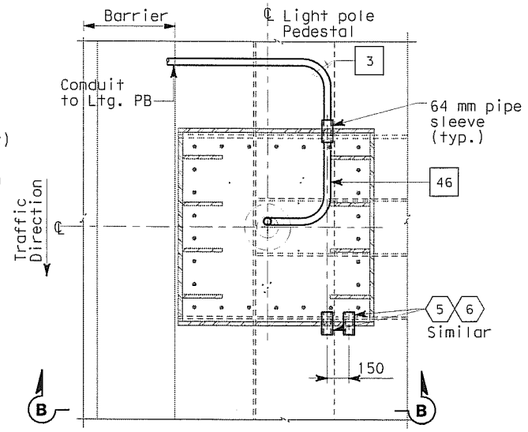

PLAN

CONDUIT STUB-UP PLAN FOR ROADWAY LIGHTING ON A METAL BASE AT PIER E2 ONLY
SCALE 1:20

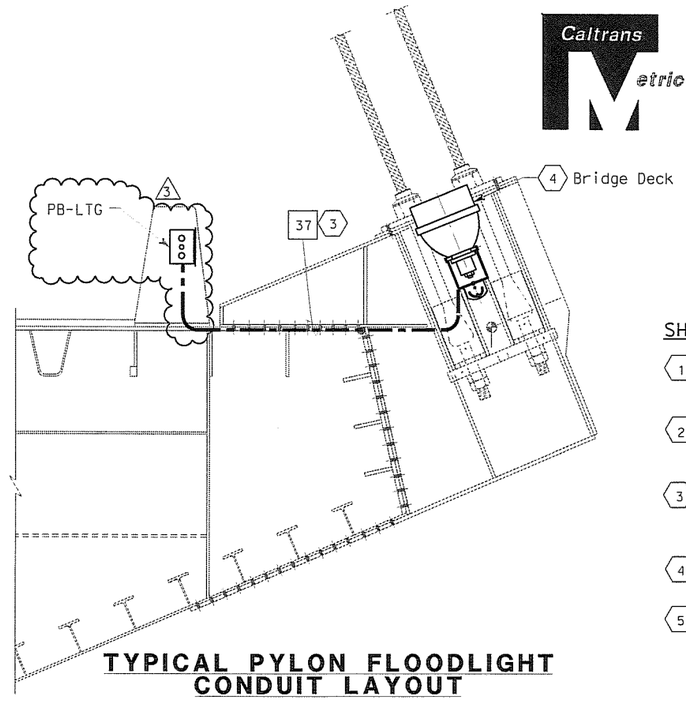

TYPICAL PYLON FLOODLIGHT CONDUIT LAYOUT

SCALE 1:20

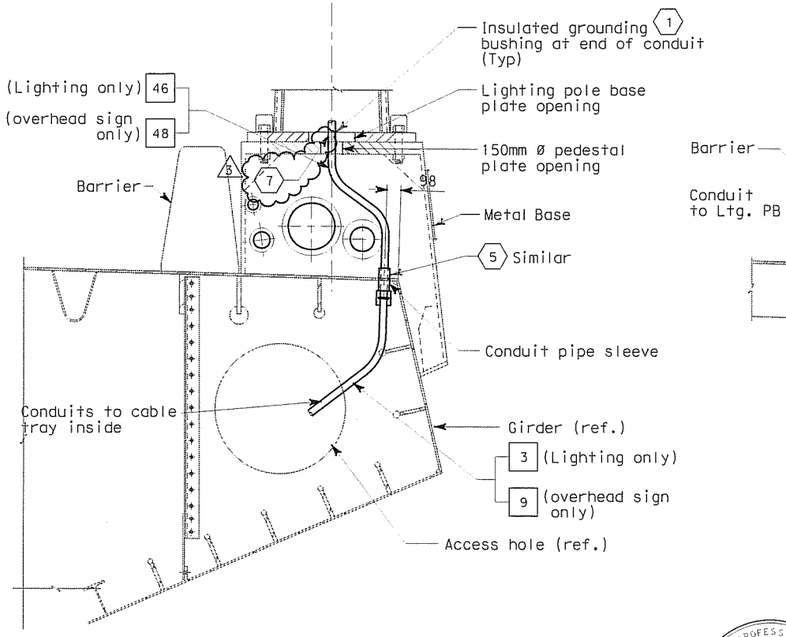

SECTION A-A

LIGHT POLE METAL PEDESTAL
CONDUIT TYPICAL INSTALLATION
SCALE 1:20

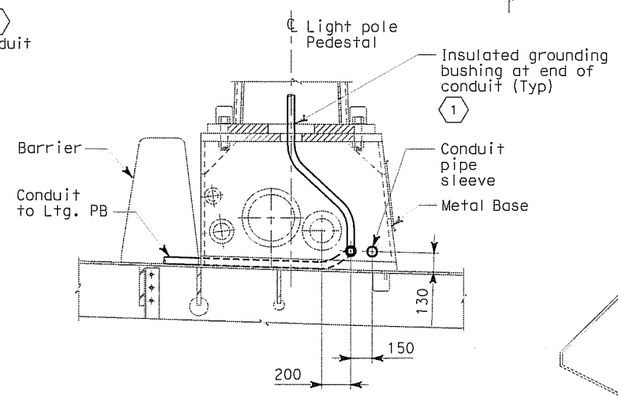

SECTION B-B

SCALE 1:20

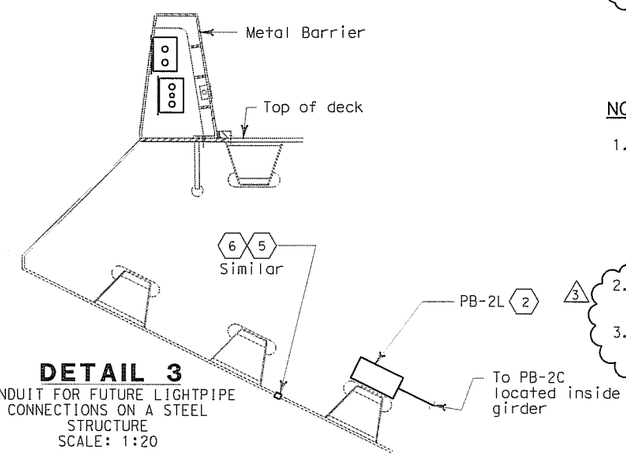

DETAIL 3

CONDUIT FOR FUTURE LIGHTPIPE CONNECTIONS ON A STEEL STRUCTURE
SCALE: 1:20

SHEET NOTES:

1. Bond grounding bushing to ground lug of lighting pole with #6 bare copper wire.
2. Conduits for future light pipe shall continue from this pull box.
3. Conduit shall be clear of all piping and pipe sleeves. Route conduit on top of deck plate, outside of girder box.
4. For pylon floodlighting layout, see sheets E-47 & E-48.
5. See Utility Detail No. 1 (Sheet No. 965 of 1204) for conduit penetration through girder plate and lighting pole metal base. The Contractor shall install sealant between the sleeve and conduit to prevent water or moisture from passing inside the sleeve.
6. Cap spare sleeves for future use where noted.
7. Ensure that the maximum of three conduits passing through the 150 mm ø pedestal plate opening are separated as much as possible from each other.

NOTES:

1. References:
   - For lighting pole schedule, see sheet E-82.
   - For location of pull boxes inside girder, see sheets E-96 thru E-101.
   - For luminaire support details, see structural sheets.
   - For pull box schedule, see sheet E-83.
2. Roadway Barrier Receptacle, see Detail 1, sheet E-68.
3. For conduit and pull box details in steel barrier, see drawings E-66 and E-66A.

DIST	COUNTY	ROUTE	KILOMETER POST TOTAL PROJECT	SHEET No	TOTAL SHEETS
04	SF	80	13.2/13.9	132R3	1204

REGISTERED ELECTRICAL ENGINEER — 12/19/02 DATE

JENS ERLINGSSON No. 8249 Exp. 9/30/06 ELECTRICAL — REGISTERED PROFESSIONAL ENGINEER — STATE OF CALIFORNIA

12-6-04
PLANS APPROVAL DATE

PB POWER, Inc.
A Parsons Brinckerhoff Company
303 Second St., Suite 700N
San Francisco, CA 94107-1317

The State of California or its officers or agents shall not be responsible for the accuracy or completeness of electronic copies of this plan sheet.

Caltrans now has a web site! To get to the web site, go to http://www.dot.ca.gov

REGISTERED PROFESSIONAL ENGINEER — S. A. ESTOQUE, JR. — No. E-10151 — Exp. 12/31/2008 ELECTRICAL — STATE OF CALIFORNIA

FOR REVISION ONLY

MARK	DATE	DESCRIPTIONS	BY	CH'D	CCO#
		REVISIONS			
3	03/04/08	BARRIER MODIFICATIONS	JS BM	SE RG	44
2	02/19/08	ELECTRICAL MODIFICATIONS	MP EL RG	RR	42
1	10/16/06	REVISED SHEET NOTES	LR	MG	11

REQUEST FOR INFORMATION NOT ADDRESSED IN THIS CCO REMAIN IN FORCE

CONTRACT CHANGE ORDER NO._____
SHEET_____ OF _____

ALL DIMENSIONS ARE IN MILLIMETERS UNLESS OTHERWISE SHOWN.

THIS PLAN IS ACCURATE FOR ELECTRICAL WORK ONLY.

FOR REDUCED PLANS ORIGINAL SCALE IS IN MILLIMETERS 0 20 40 60 80

DETAILS
SAS SUPERSTRUCTURE ROADWAY WESTBOUND CONDUIT LOCATIONS

SCALE AS NOTED

E-67

CALCULATED/ DESIGNED BY	CHECKED BY	DATE	REVISED BY	DATE REVISED
KG	AB	10/01		11/01

STATE OF CALIFORNIA - DEPARTMENT OF TRANSPORTATION
Caltrans
DESIGN OVERSIGHT
BEHZAD GOLEMOHAMMADI

LAST REVISION 00-00-00
DATE PLOTTED = 5/22/2008
TIME PLOTTED = 10:44:30 AM

DGN FILE = T:\13103\MS\pse\SAS Struc\CCO\SA5 CCO44\04-0120F1_0132R03.dgn
USERNAME = tlorico

CU 04251 | EA 0120F1

DIST	COUNTY	ROUTE	KILOMETER POST TOTAL PROJECT	SHEET No.	TOTAL SHEETS
04	SF	80	13.2/13.9	133R3	1204

REGISTERED ELECTRICAL ENGINEER — 12/19/02 DATE

12-6-04
PLANS APPROVAL DATE

JENS ERLINGSSON No. 8249 Exp. 9/30/06 ELECTRICAL — REGISTERED PROFESSIONAL ENGINEER — STATE OF CALIFORNIA

PB POWER, Inc.
A Parsons Brinckerhoff Company
303 Second St., Suite 700N
San Francisco, CA 94107-1317

The State of California or its officers or agents shall not be responsible for the accuracy or completeness of electronic copies of this plan sheet.

Caltrans now has a web site! To get to the web site, go to http://www.dot.ca.gov

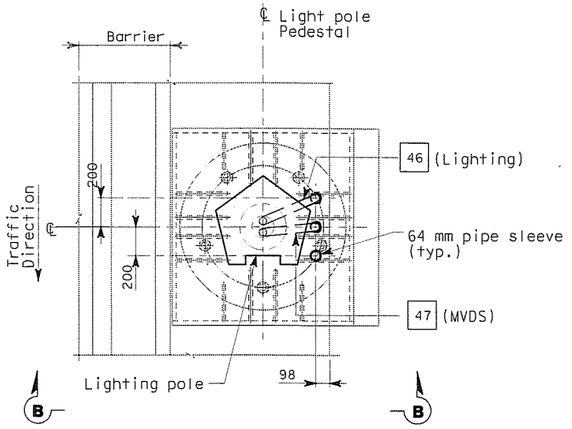

PLAN

CONDUIT STUB-UP PLAN FOR ROADWAY LIGHTING, AND MVDS ON METAL BASE
SCALE 1:20

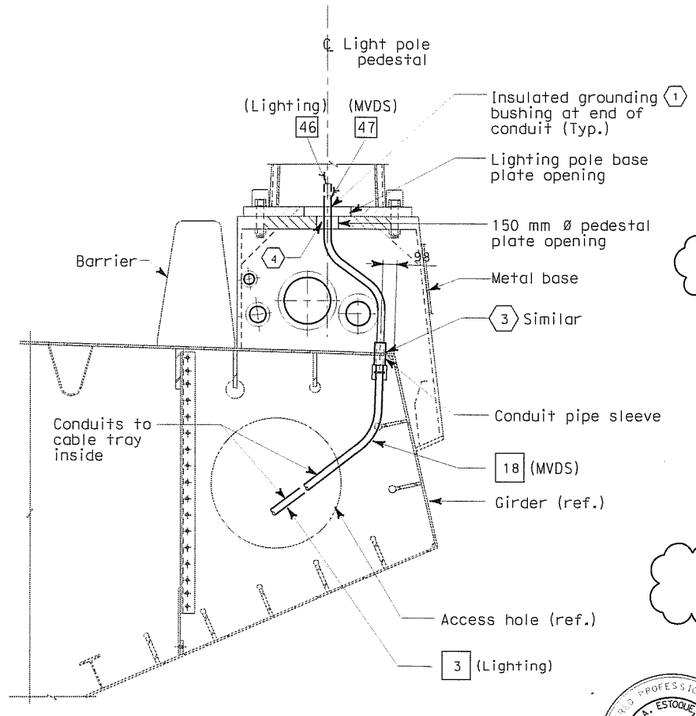

SECTION B-B

SCALE 1:20

SHEET NOTES:

1. Bond grounding bushing to ground lug of lighting pole or overhead sign post with #6 bare copper wire.
2. Deleted
3. See Utility Detail No. 1 (Sheet No. 965 of 1204) for conduit penetration through girder plate and lighting pole metal base. The Contractor shall install sealant between the sleeve and conduit to prevent water or moisture from passing inside the sleeve.
4. Ensure that the maximum of three conduits passing through the 150 mm ø pedestal plate opening are separated as much as possible from each other.

Outdoor Barrier receptacle with deep single gang, corrosion resistant enclosure and weatherproof threaded cap (20 A, 125 V, 3 W, straight blade)
Manufacturer Crouse Hinds or equal
Enclosure = FDLA2 (Corro-free)
Cover with receptacle = DS222
(GFI circuit breaker protection)

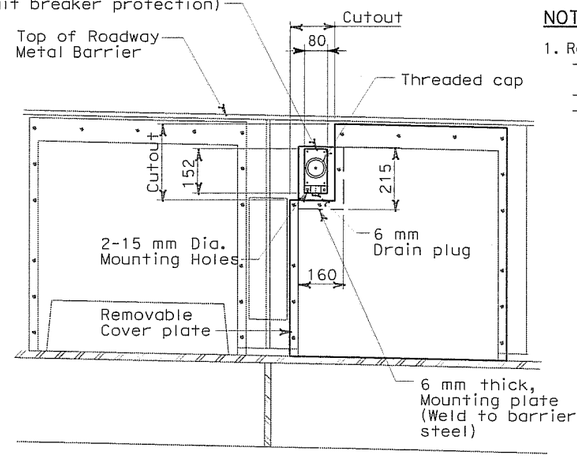

DETAIL 1

(TYPICAL ROADWAY BARRIER RECEPTACLE LOCATION)
SCALE: 1:10

NOTES:

1. References:
   - For installation and typical details of TOS equipment, see sheets E-344 thru E-357.
   - For pull box schedule, see sheet E-83.
   - For TOS field element locations, see sheet E-341.

S. A. ESTOQUE, JR. — REGISTERED PROFESSIONAL ENGINEER — No. E-10151 Exp. 12/31/2008 ELECTRICAL — STATE OF CALIFORNIA

FOR REVISION ONLY

REQUEST FOR INFORMATION NOT ADDRESSED IN THIS CCO REMAIN IN FORCE

MARK	DATE	REVISIONS DESCRIPTIONS	BY	CH'D	CCO#
3	03/04/08	BARRIER MODIFICATIONS	JS BM	RG SE	44
2	02/19/08	ELECTRICAL MODIFICATIONS	MP EL RG	RR	42
1	10/16/06	REVISED SHEET NOTES	LR	MG	11

CONTRACT CHANGE ORDER NO. _____
SHEET ____ OF ____

DETAILS
SAS SUPERSTRUCTURE ROADWAY WESTBOUND CONDUIT LOCATIONS

SCALE AS NOTED

E-68

CALCULATED/ DESIGNED BY	CHECKED BY	DATE	REVISED BY	DATE REVISED
KG	AB	10/01		11/01

DESIGN OVERSIGHT — BEHZAD GOLEMOHAMMADI

STATE OF CALIFORNIA - DEPARTMENT OF TRANSPORTATION — Caltrans

LAST REVISION 00-00-00 — DATE PLOTTED = 5/22/2008 — TIME PLOTTED = 10:44:55 AM

FOR REDUCED PLANS ORIGINAL SCALE IS IN MILLIMETERS 0 20 40 60 80

DGN FILE = T:\13103\MS\pse\SAS Struc\CCO\SAS CCO44\04-0120F1_0133R03.dgn
USERNAME = florico

CU 04251 — EA 0120F1

DIST	COUNTY	ROUTE	KILOMETER POST TOTAL PROJECT	SHEET No	TOTAL SHEETS
04	SF	80	13.2/13.9	189 R2	1204

Jens Erlingsson 12/19/02
REGISTERED ELECTRICAL ENGINEER DATE

12-6-04
PLANS APPROVAL DATE

REGISTERED PROFESSIONAL ENGINEER — JENS ERLINGSSON No. 8249 Exp. 9/30/06 ELECTRICAL — STATE OF CALIFORNIA

PB POWER, Inc.
A Parsons Brinckerhoff Company
303 Second St., Suite 700N
San Francisco, CA 94107-1317

The State of California or its officers or agents shall not be responsible for the accuracy or completeness of electronic copies of this plan sheet.

Caltrans now has a web site! To get to the web site, go to: http://www.dot.ca.gov

Caltrans Metric

STATE OF CALIFORNIA - DEPARTMENT OF TRANSPORTATION
Caltrans

DESIGN OVERSIGHT
BEHZAD GOLEMOHAMMADI

CALCULATED/ DESIGNED BY
CHECKED BY

DATE	REVISED BY	DATE REVISED
08/02	EDC	08/02
	CYF	

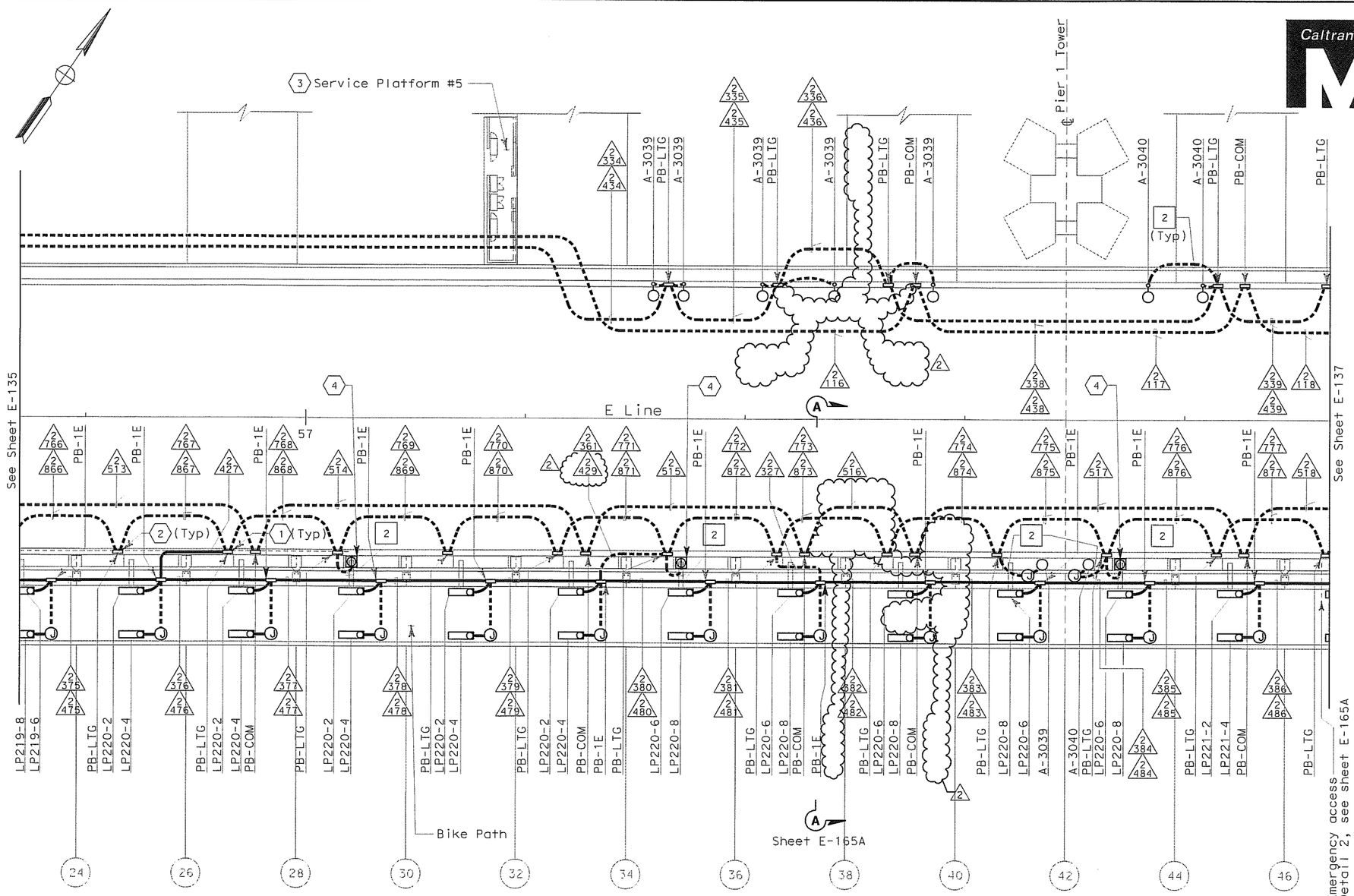

SAS SUPERSTRUCTURE CONDUIT - PLAN

SHEET NOTES:

1. Conduit from barrier pullbox or other equipment down into Girder Box, see sheet E-182.
2. For conduit to tower and suspension cable lighting see sheet E-227.
3. Contractor shall furnish and install UP-205 and LP-220 per sheet E-72. For complete scope of work on platform and other related work not shown on this sheet, see Electrical Special Provisions.
4. Roadway Barrier Receptacle, see Detail 1, sheet E-162.

NOTES:

1. References:
   - For typical details and locations of conduit connections to light poles, barrier outlet boxes, call boxes, overhead sign lighting, CMS, CCTV and MVDS, see sheets E-160 thru E-162 and E-169.
   - TOS equipment is shown for conduit routing only. For typical details of TOS controller and devices, see sheets E-344 through E-357.
   - For types of pull boxes, splice boxes and enclosures, see sheet E-169.
   - For circuit and conduit/cable tray schedules, see sheets starting at E-401.
2. For Roadway Level Call Boxes, refer to sheet E-396.
3. For Roadway level, Bike Path and Belvedere Lighting Fixture Schedules, see sheets E-146, E-147 and E-165.
4. For Roadway level and Bike Path Call Box Schedule, see sheet E-397.
5. For number of lighting fixtures (main tower lights) see lighting schedule sheets E-271 and E-272.
6. All conduits and fittings routed exposed between the Bike Path and the roadway shall be galvanized rigid steel, PVC coated.
7. See sheets E-160 thru E-165 for conduit locations.

REGISTERED PROFESSIONAL ENGINEER — S. A. ESTOQUE, JR. No. E-10151 Exp. 12/31/2008 ELECTRICAL — STATE OF CALIFORNIA

FOR REVISION ONLY

REQUEST FOR INFORMATION NOT ADDRESSED IN THIS CCO REMAIN IN FORCE					
2	03/04/08	BARRIER MODIFICATIONS	JS BM	RG SE	44
1	02/19/08	ELECTRICAL MODIFICATIONS	MP EL	RR	42
MARK	DATE	DESCRIPTIONS	BY	CH'D	CCO#
		REVISIONS			

CONTRACT CHANGE ORDER NO. _____
SHEET _____ OF _____

THIS PLAN ACCURATE FOR ELECTRICAL WORK ONLY.

SAS SUPERSTRUCTURE ROADWAY EASTBOUND LIGHTING AND ELECTRICAL SYSTEMS

SCALE 1:200

E-136

LAST REVISION 00-00-00
DATE PLOTTED = 5/22/2008
TIME PLOTTED = 10:49:21 AM

FOR REDUCED PLANS ORIGINAL SCALE IS IN MILLIMETERS 0 20 40 60 80

DGN FILE = T:\13103\MS\pse\SAS Struc\CCO\SAS CC044\04-0120F1_0189R02.dgn
USERNAME = tlorico

CU 04251 EA 0120F1

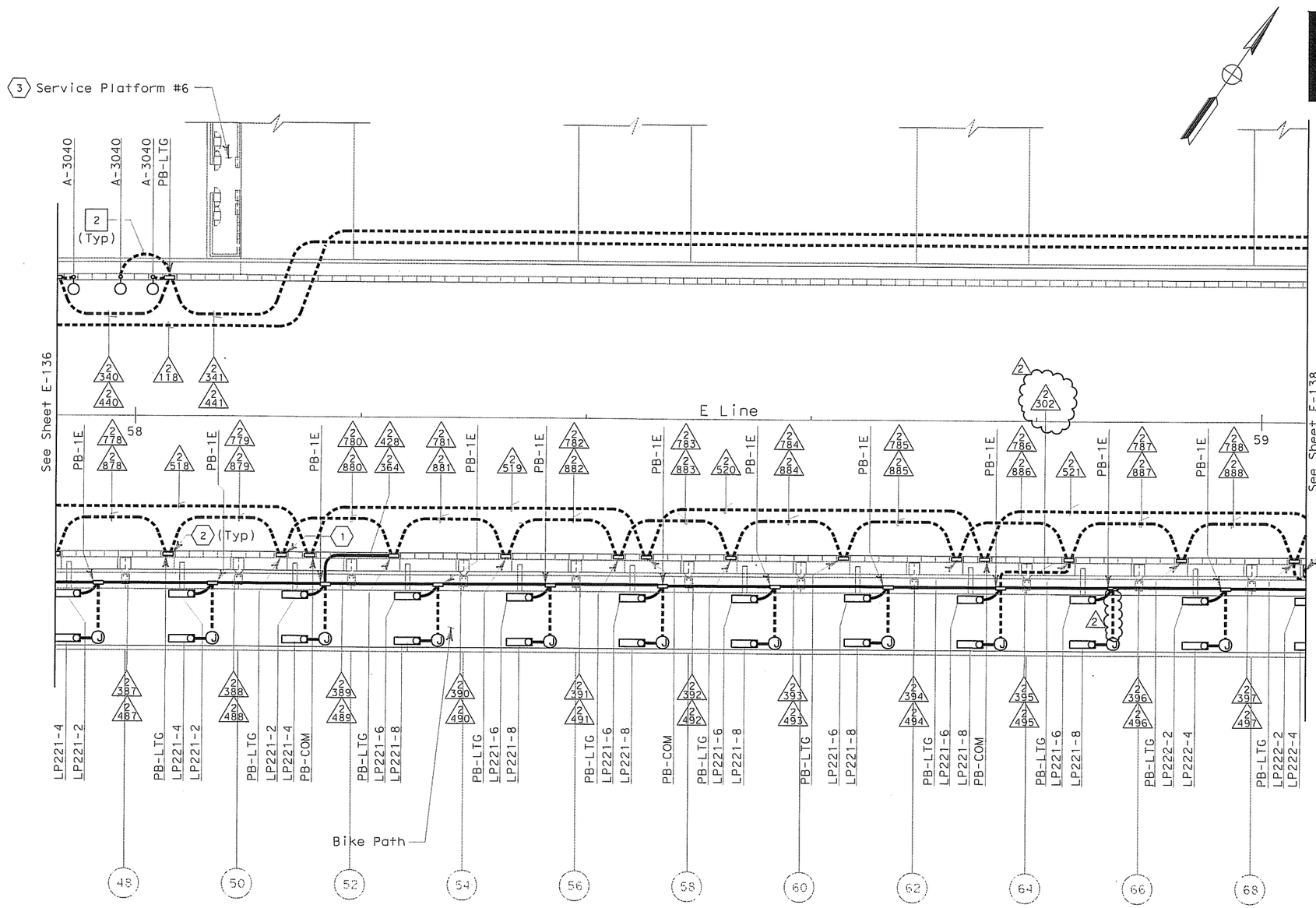

SAS SUPERSTRUCTURE - CONDUIT PLAN

REQUEST FOR INFORMATION NOT ADDRESSED IN THIS CCO REMAIN IN FORCE					
2	03/04/08	BARRIER MODIFICATIONS	TW	RG	44
1	02/19/08	ELECTRICAL MODIFICATIONS	MP EL	RR	42
MARK	DATE	DESCRIPTIONS	BY	CH'D	CCO#
REVISIONS					

CONTRACT CHANGE ORDER NO. _____
SHEET _____ OF _____

FOR REVISION ONLY

THIS PLAN ACCURATE FOR ELECTRICAL WORK ONLY.

Caltrans Metric

DIST	COUNTY	ROUTE	KILOMETER POST TOTAL PROJECT	SHEET No	TOTAL SHEETS
04	SF	80	13.2/13.9	190R2	1204

REGISTERED ELECTRICAL ENGINEER — 12/19/02 DATE

12-6-04
PLANS APPROVAL DATE

REGISTERED PROFESSIONAL ENGINEER — JENS ERLINGSSON No. 8249 Exp. 9/30/06 ELECTRICAL — STATE OF CALIFORNIA

PB POWER, Inc.
A Parsons Brinckerhoff Company
303 Second St., Suite 700N
San Francisco, CA 94107-1317

The State of California or its officers or agents shall not be responsible for the accuracy or completeness of electronic copies of this plan sheet.

Caltrans now has a web site! To get to the web site, go to: http://www.dot.ca.gov

SHEET NOTES:

1. Conduit from barrier pullbox or other equipment down into Girder Box, see sheet E-183.
2. For conduit to tower and suspension cable lighting see sheet E-228.
3. Contractor shall furnish and install UP-206 and LP-221 per sheet E-73. For complete scope of work on platform and other related work not shown on this sheet, see Electrical Special Provisions.
4. Roadway Barrier Receptacle, see Detail 1, sheet E-162.

NOTES:

1. References:
   - For typical details and locations of conduit connections to light poles, barrier outlet boxes, call boxes, overhead sign lighting, CMS, CCTV and MVDS, see sheets E-160 thru E-162 and E-169.
   - TOS equipment is shown for conduit routing only. For typical details of TOS controller and devices, see sheets E-344 through E-357.
   - For types of pull boxes, splice boxes and enclosures, see sheet E-169.
   - For circuit and conduit/cable tray schedules, see sheets starting at E-401.
2. For Roadway Level Call Boxes, refer to sheet E-396.
3. For Roadway level, Bike Path and Belvedere Lighting Fixture Schedules, see sheets E-146, E-147 and E-165.
4. For Roadway level and Bike Path Call Box Schedule, see sheet E-397.
5. For number of lighting fixtures (main tower lights) see lighting schedule sheets E-271 and E-272.
6. All conduits and fittings routed exposed between the Bike Path and the roadway shall be galvanized rigid steel, PVC coated.
7. See sheets E-160 thru E-165 for conduit locations.

SAS SUPERSTRUCTURE ROADWAY EASTBOUND
LIGHTING AND ELECTRICAL SYSTEMS

SCALE 1:200

E-137

ALL DIMENSIONS ARE IN METERS UNLESS OTHERWISE SHOWN

FOR REDUCED PLANS ORIGINAL SCALE IS IN MILLIMETERS — 0 20 40 60 80

DGN FILE = T:\3103\MS\pse\SAS Struc\CCO\SAS CC044\04-0120F1_0190R02.dgn
USERNAME = tlorico

CU 04251 | EA 0120F1

LAST REVISION 00-00-00 | DATE PLOTTED = 5/22/2008 | TIME PLOTTED = 10:49:59 AM

STATE OF CALIFORNIA - DEPARTMENT OF TRANSPORTATION — Caltrans

DESIGN OVERSIGHT — BEHZAD GOLEMOHAMMADI

CALCULATED/ DESIGNED BY	EDC	DATE 08/02	REVISED BY	DATE REVISED
CHECKED BY	CYF	08/02		

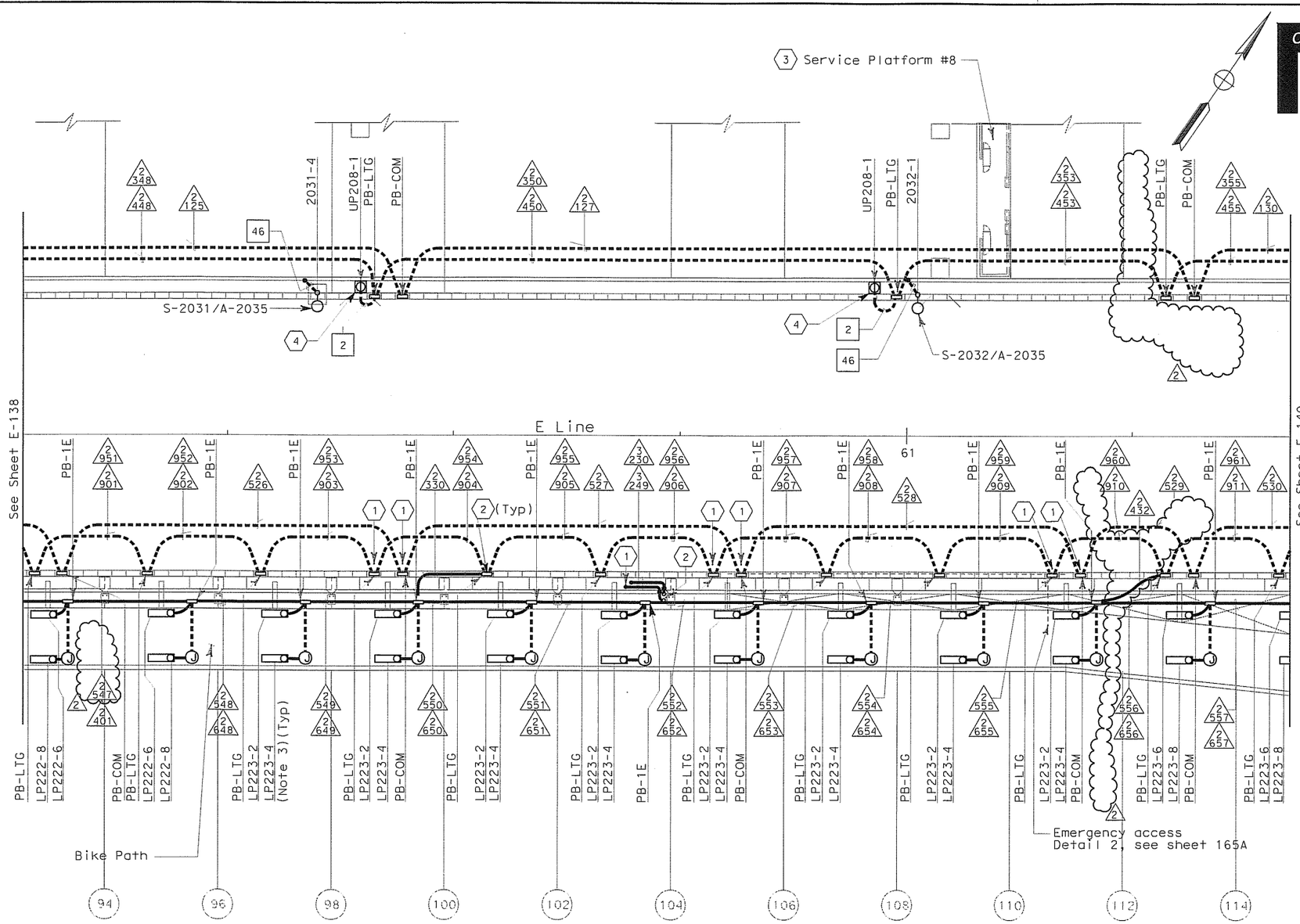

SAS SUPERSTRUCTURE - CONDUIT PLAN

DIST	COUNTY	ROUTE	KILOMETER POST TOTAL PROJECT	SHEET NO	TOTAL SHEETS
04	SF	80	13.2/13.9	192 R2	1204

Jens Erlingsson 12/19/02
REGISTERED ELECTRICAL ENGINEER DATE

12-6-04
PLANS APPROVAL DATE

REGISTERED PROFESSIONAL ENGINEER — JENS ERLINGSSON No. 8249 Exp. 9/30/06 ELECTRICAL — STATE OF CALIFORNIA

PB POWER, Inc.
A Parsons Brinckerhoff Company
303 Second St., Suite 700N
San Francisco, CA 94107-1517

The State of California or its officers or agents shall not be responsible for the accuracy or completeness of electronic copies of this plan sheet.

Caltrans now has a web site! To get to the web site, go to http://www.dot.ca.gov

SHEET NOTES:

1. Conduit from barrier pullbox or other equipment down into Girder Box, see sheet E-185.
2. Contractor shall furnish and install UP-208 and LP-223 per sheet E-75. For complete scope of work on platform and other related work not shown on this sheet, see Electrical Special Provisions.
3. For conduit to tower and suspension cable lighting, see sheet E-230.
4. Roadway Barrier Receptacle, see Detail 1, sheet E-162.

NOTES:

1. References:
   - For typical details and locations of conduit connections to light poles, barrier outlet boxes, call boxes, overhead sign lighting, CMS, CCTV and MVDS, see sheets E-160 thru E-162 and E-169.
   - TOS equipment is shown for conduit routing only. For typical details of TOS controller and devices, see sheets E-344 through E-357.
   - For types of pull boxes, splice boxes and enclosures, see sheet E-169.
   - For circuit and conduit/cable tray schedules, see sheets starting at E-401.
2. For Roadway Level Call Boxes, refer to sheet E-396.
3. For Roadway level, Bike Path and Belvedere Lighting Fixture Schedules, see sheets E-146, E-147 and E-165.
4. For Roadway level and Bike Path Call Box Schedule, see sheet E-397.
5. For number of lighting fixtures (main tower lights) see lighting schedule sheets E-271 and E-272.
6. All conduits and fittings routed exposed between the Bike Path and the roadway shall be rigid galvanized steel, PVC coated.
7. See sheets E-160 thru E-165 for conduit locations.

SAS SUPERSTRUCTURE ROADWAY EASTBOUND
LIGHTING AND ELECTRICAL SYSTEMS

SCALE 1:200

E-139

REGISTERED PROFESSIONAL ENGINEER — S. A. ESTOOLE, JR No. E-10151 Exp. 12/31/2008 ELECTRICAL — STATE OF CALIFORNIA

FOR REVISION ONLY

THIS PLAN ACCURATE FOR ELECTRICAL WORK ONLY.

REQUEST FOR INFORMATION NOT ADDRESSED IN THIS CCO REMAIN IN FORCE					
2	03/04/08	BARRIER MODIFICATIONS	JS BM	RG SE	44
1	02/19/08	ELECTRICAL MODIFICATIONS	MP EL	RR	42
MARK	DATE	DESCRIPTIONS	BY	CH'D	CCO#
REVISIONS					

CONTRACT CHANGE ORDER NO. _____
SHEET _____ OF _____

STATE OF CALIFORNIA - DEPARTMENT OF TRANSPORTATION — Caltrans

DESIGN OVERSIGHT — BEHZAD GOLEMOHAMMADI

CALCULATED/ DESIGNED BY	EDC	DATE 08/02	REVISED BY
CHECKED BY	CYF	08/02	DATE REVISED

LAST REVISION 00-00-00 — DATE PLOTTED = 5/22/2008 — TIME PLOTTED = 10:50:24 AM

FOR REDUCED PLANS ORIGINAL SCALE IS IN MILLIMETERS 0 20 40 60 80

DGN FILE = T:\13103\MS\pse\SAS Struc\CCO\SAS CCO44\04-0120F1_0192R02.dgn
USERNAME = tlorico

CU 04251 | EA 0120F1

DIST	COUNTY	ROUTE	KILOMETER POST TOTAL PROJECT	SHEET NO	TOTAL SHEETS
04	SF	80	13.2/13.9	193R2	1204

Jens Erlingsson 12/19/02
REGISTERED ELECTRICAL ENGINEER DATE

12-6-04
PLANS APPROVAL DATE

REGISTERED PROFESSIONAL ENGINEER — JENS ERLINGSSON No. 8249 Exp. 9/30/06 ELECTRICAL — STATE OF CALIFORNIA

PB POWER, Inc.
A Parsons Brinckerhoff Company
303 Second St., Suite 700N
San Francisco, CA 94107-1317

The State of California or its officers or agents shall not be responsible for the accuracy or completeness of electronic copies of this plan sheet.

Caltrans now has a web site! To get to the web site, go to http://www.dot.ca.gov

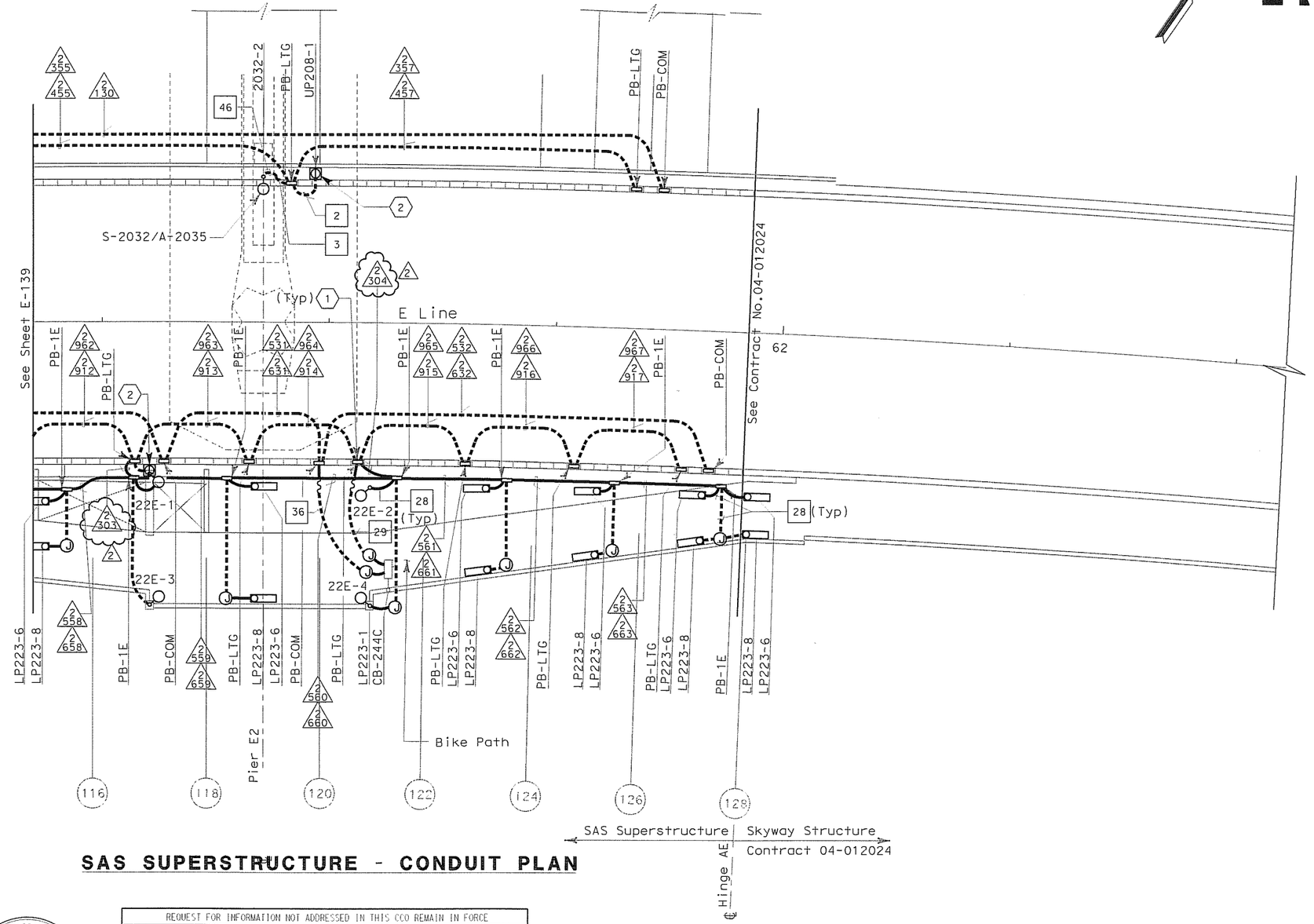

SAS SUPERSTRUCTURE - CONDUIT PLAN

SHEET NOTES:

(1) For conduit to tower and suspension cable lighting, see sheet E-230.

(2) Roadway Barrier Receptacle, see Detail 1, sheet E-162.

NOTES:

1. References:
   - For typical details and locations of conduit connections to light poles, barrier outlet boxes, call boxes, overhead sign lighting, CMS, CCTV and MVDS, see sheets E-160 thru E-162 and E-169.
   - TOS equipment is shown for conduit routing only. For typical details of TOS controller and devices, see sheets E-344 through E-357.
   - For types of pull boxes, splice boxes and enclosures, see sheet E-169.
   - For circuit and conduit/cable tray schedules, see sheets starting at E-401.
2. For Roadway Level Call Boxes, refer to sheet E-396.
3. For Roadway level, Bike Path and Belvedere Lighting Fixture Schedules, see sheets E-146, E-147 and E-165.
4. For Roadway level and Bike Path Call Box Schedule, see sheet E-397.
5. For number of lighting fixtures (main tower lights) see lighting schedule sheets E-271 and E-272.
6. All conduits and fittings routed exposed between the Bike Path and the roadway shall be galvanized rigid steel, PVC coated.
7. See sheets E-160 thru E-165 for conduit locations.
8. For Belvedere lighting fixture installation, see sheet E-173.

REQUEST FOR INFORMATION NOT ADDRESSED IN THIS CCO REMAIN IN FORCE					
2	03/04/08	BARRIER MODIFICATIONS	TW	RG	44
1	02/19/08	ELECTRICAL MODIFICATIONS	MP EL	RR	42
MARK	DATE	DESCRIPTIONS	BY	CH'D	CCO#
REVISIONS					

CONTRACT CHANGE ORDER NO. _____
SHEET _____ OF _____

REGISTERED PROFESSIONAL ENGINEER — FADI WALIEDDINE No. 11465 Exp. 12/31/2009 ELECTRICAL — STATE OF CALIFORNIA

FOR REVISION ONLY
THIS PLAN ACCURATE FOR ELECTRICAL WORK ONLY.

SAS SUPERSTRUCTURE ROADWAY EASTBOUND LIGHTING AND ELECTRICAL SYSTEMS

SCALE 1:200

E-140

CALCULATED/ DESIGNED BY	DATE	REVISED BY
CHECKED BY	08/02	DATE REVISED
EDC	CYF	

STATE OF CALIFORNIA - DEPARTMENT OF TRANSPORTATION
Caltrans
DESIGN OVERSIGHT
BEHZAD GOLEMOHAMMADI

ALL DIMENSIONS ARE IN METERS UNLESS OTHERWISE SHOWN

FOR REDUCED PLANS ORIGINAL SCALE IS IN MILLIMETERS 0 20 40 60 80

DGN FILE = I:\13103\MS\pse\SAS Struc\CCO\SAS CC044\04-0120f1_0193R02.dgn
USERNAME = florico

CU 04251 EA 0120F1

LAST REVISION 00-00-00
DATE PLOTTED = 5/22/2008
TIME PLOTTED = 10:50:46 AM

UTILITY PANEL UP-205 (CKT #2096)

Location: SAS SUPERSTRUCTURE SERVICE PLATFORM #5

LOAD DESCRIPTION	LTG	REC	OTH.	CB		CB	LTG	REC	OTH.	LOAD DESCRIPTION
Recept (2) Eastbound North Barrier		360		20/1	1 A 2	20/1				Spare
Spare				20/1	3 B 4	20/1				Spare △2
Recept (2) Service Platform #5		360		20/1	5 C 6	20/1				Spare
Recept (2) Girder		360		20/1	7 A 8	20/1	738			Girder Lighting (18)
RTU #10E (PLC Power Supply)			100	20/1	9 B 10	20/1				Spare
RTU-#10E (Lighting & Receptacle)	105	180	150	20/1	11 C 12	20/1				Spare
TOTAL WATTS	105	1260	250				738		△2	TOTAL VA

LOAD SUMMARY (INCLUDES .90 PF) (VA)

Lighting (At 100%): 843
Gen Use (1st 10 kVA at 100% Plus 50% of remainder): 1540

TOTAL kVA: 2.363 △2

BALANCE (kVA)

Phase A - 0.720 △2
Phase B - 0.100
Phase C - 0.795

VOLTAGE: 208Y/120 V
PHASE/WIRES: 3-phase, 4-wire
BUS RATING: 100 A
MAIN: 60 A
MOUNTING: Surface
K.A.I.C.: 10

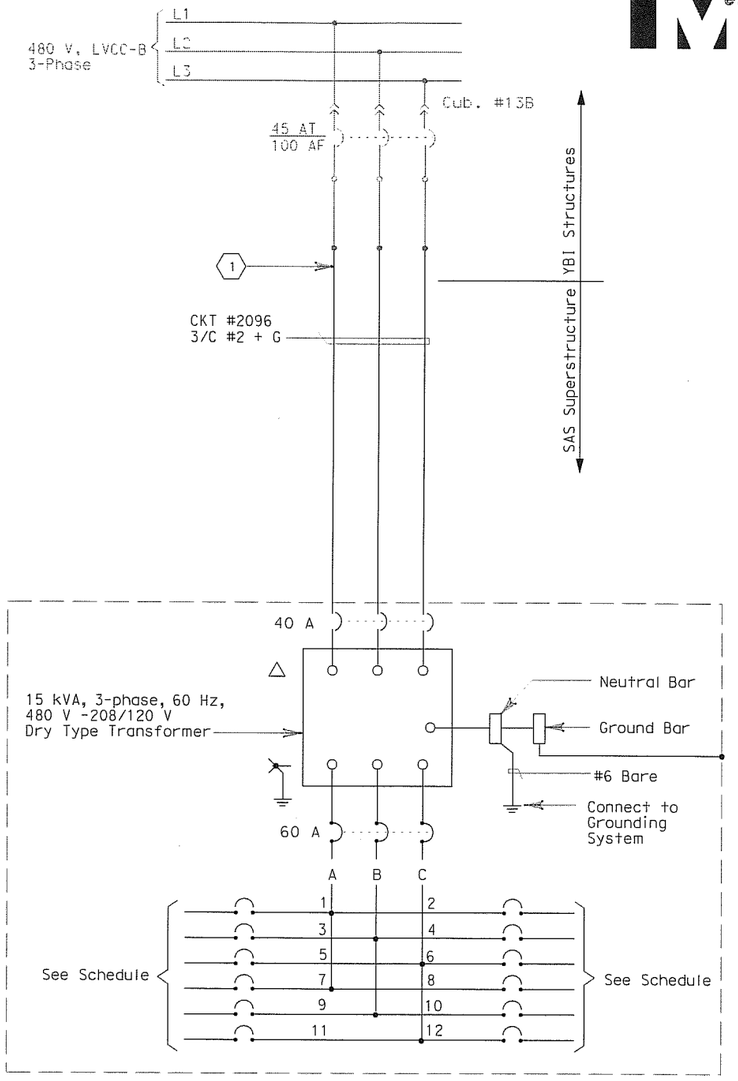

Caltrans Metric

DIST	COUNTY	ROUTE	KILOMETER POST TOTAL PROJECT	SHEET NO	TOTAL SHEETS
04	SF	80	13.2/13.9	200 R2	1204

Jens Erlingsson 12/19/02
REGISTERED ELECTRICAL ENGINEER DATE

12-6-04
PLANS APPROVAL DATE

REGISTERED PROFESSIONAL ENGINEER — JENS ERLINGSSON No. 8249 Exp. 9/30/06 ELECTRICAL — STATE OF CALIFORNIA

PB POWER, Inc.
A Parsons Brinckerhoff Company
303 Second St., Suite 700N
San Francisco, CA 94107-1317

The State of California or its officers or agents shall not be responsible for the accuracy or completeness of electronic copies of this plan sheet.

Caltrans now has a web site! To get to the web site, go to http://www.dot.ca.gov

SHEET NOTES:

(1) The Contractor shall extend and coil 5.0 meters of cable in manhole #25. All cables shall be tagged with circuit numbers as shown.

NOTES:

1. The Contractor shall provide nameplates and circuit schedules as shown.
2. Install transformer/panelboard inside a PB-8A enclosure (fiberglass) to be sized by the Contractor.
3. References:
   - For LVCC-B single line diagram, see sheets E-32 thru E-34.
   - For circuit and conduit/cable tray schedules, see sheets starting at E-401.
   - For pull box schedule, see sheet E-169.

DATE	REVISED BY	DATE REVISED
7/01	JP	12/01 BL

CALCULATED/DESIGNED BY | CHECKED BY

DESIGN OVERSIGHT — BEHZAD GOLEMOHAMMADI

STATE OF CALIFORNIA - DEPARTMENT OF TRANSPORTATION — Caltrans

REGISTERED PROFESSIONAL ENGINEER — S. A. ESTOQUE, JR. No. E-10151 Exp. 12/31/2008 ELECTRICAL — STATE OF CALIFORNIA

FOR REVISION ONLY

REQUEST FOR INFORMATION NOT ADDRESSED IN THIS CCO REMAIN IN FORCE					
△2	03/04/08	BARRIER MODIFICATIONS	JS BM	RG SE	44
△1	02/19/08	ELECTRICAL MODIFICATIONS	MP EL	RR	42
MARK	DATE	DESCRIPTIONS	BY	CH'D	CCO#
		REVISIONS			

CONTRACT CHANGE ORDER NO. _____
SHEET _____ OF _____

THIS PLAN ACCURATE FOR ELECTRICAL WORK ONLY.

DETAILS
SAS SUPERSTRUCTURE ROADWAY EASTBOUND
PANEL UP-205 SCHEDULE

NO SCALE

E-151

LAST REVISION 00-00-00 — DATE PLOTTED = 5/22/2008 — TIME PLOTTED = 10:51:08 AM

FOR REDUCED PLANS ORIGINAL SCALE IS IN MILLIMETERS 0 20 40 60 80

DGN FILE = T:\EI3103\MS\pse\SAS Struc\CCO\SAS CCO44\04-0120F1_0200R02.dgn
USERNAME = florico

CU 04251 | EA 0120F1

UTILITY PANEL UP-208 (CKT #2099)

Location: SAS SUPERSTRUCTURE SERVICE PLATFORM #8

LOAD DESCRIPTION	LTG	REC	OTH.	CB		CB	LTG	REC	OTH.	LOAD DESCRIPTION
Recept (3) Eastbound North Barrier		540		20/1	1 A 2	20/1			10	CB-243A
Spare				20/1	3 B 4	20/1			10	CB-243B
Recept (2) Service Platform #8		360		20/1	5 C 6	20/1			20	CB-243C,CB-244C
Recept (3) Girder		540		20/1	7 A 8	20/1	984			Girder Lighting (24)
RTU-#11E (PLC Power Supply)			100	20/1	9 B 10	20/1	697			Girder Lighting (17)
RTU-#11E (Lighting & Receptacle)	105	180	150	20/1	11 C 12	20/1				Spare
Spare				20/1	13 A 14	20/1				Spare
Navigation Relay Cabinet # NAP-8			600	20/1	15 B 16	20/1				Spare
Spare				20/1	17 C 18	20/1				
				20/1	19 A 20	20/1				
				20/1	21 B 22	20/1				
				20/1	23 C 24	20/1			40	
TOTAL VA	105	1620	850				1681			TOTAL VA

LOAD SUMMARY (INCLUDES .90 PF) (VA)

Lighting (At 100%): 1786
Gen Use (1st 10 kVA at 100% Plus 50% of remainder): 2,530

TOTAL kVA: 4.296

BALANCE (kVA)

Phase A 2.074
Phase B 1.407
Phase C - 0.815

VOLTAGE: 208Y/120 V
PHASE/WIRES: 3-phase, 4-wire
BUS RATING: 100 A
MAIN: 60 A
MOUNTING: Surface
K.A.I.C.: 10

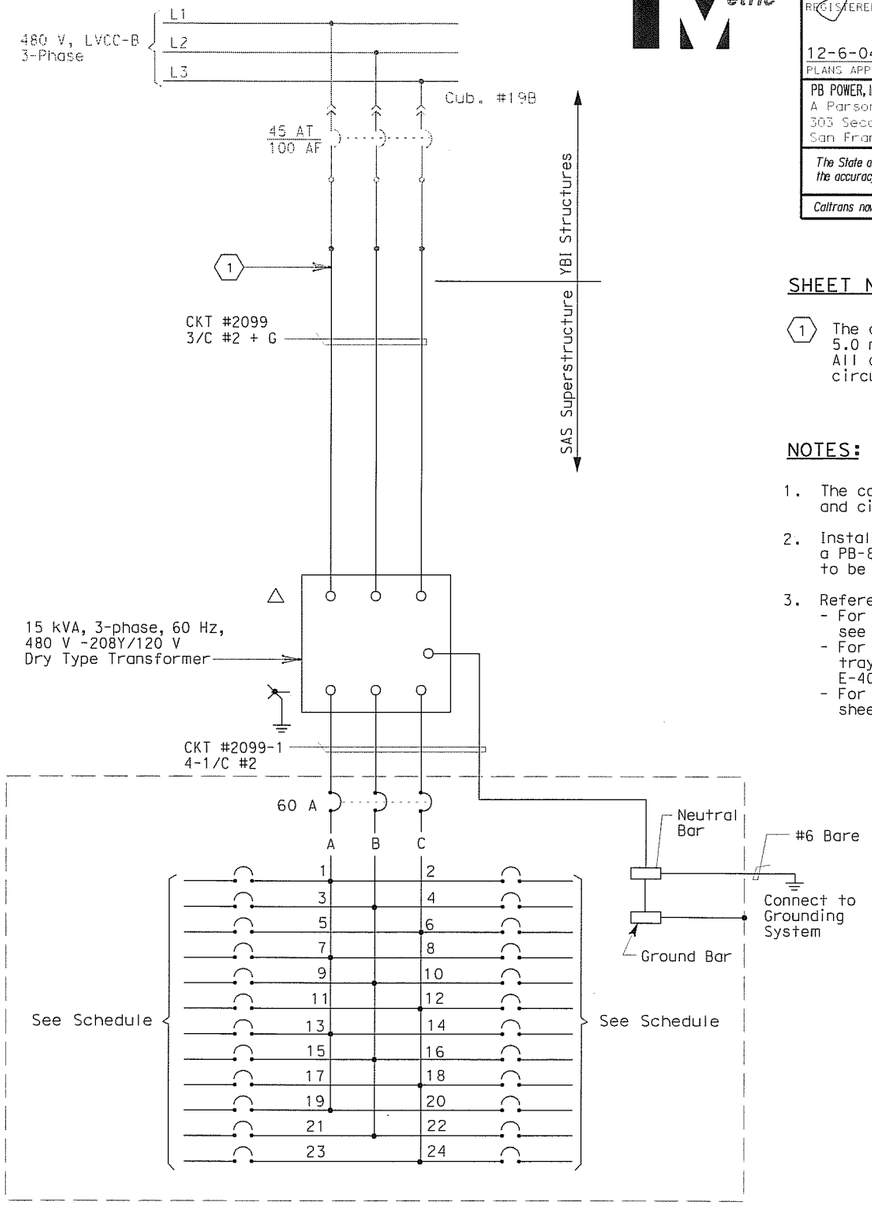

DIST	COUNTY	ROUTE	KILOMETER POST TOTAL PROJECT	SHEET No.	TOTAL SHEETS
04	SF	80	13.2/13.9	203 R1	1204

REGISTERED ELECTRICAL ENGINEER — 12/19/02 DATE

JENS ERLINGSSON No. 8249 Exp. 9/30/06 ELECTRICAL — REGISTERED PROFESSIONAL ENGINEER — STATE OF CALIFORNIA

12-6-04
PLANS APPROVAL DATE

PB POWER, Inc.
A Parsons Brinckerhoff Company
303 Second St., Suite 700N
San Francisco, CA 94107-1317

The State of California or its officers or agents shall not be responsible for the accuracy or completeness of electronic copies of this plan sheet.

Caltrans now has a web site! To get to the web site, go to http://www.dot.ca.gov

SHEET NOTES:

(1) The contractor shall extend and coil 5.0 meters of cable in manhole 25 All cables shall be tagged with circuit numbers as shown.

NOTES:

1. The contractor shall provide nameplates and circuit schedules as shown.
2. Install transformer/panelboard inside a PB-8A enclosure (fiberglass) to be sized by the contractor.
3. References:
   - For LVCC-B single line diagram, see sheets E-32 thru E-34.
   - For circuit and conduit/cable tray schedules, see sheets starting at E-401.
   - For pull box schedule, see sheet E-169.

REGISTERED PROFESSIONAL ENGINEER — S. A. ESTOQUE, JR. — No. E-10151 Exp. 12/31/2008 ELECTRICAL — STATE OF CALIFORNIA

FOR REVISION ONLY

REQUEST FOR INFORMATION NOT ADDRESSED IN THIS CCO REMAIN IN FORCE					
MARK	DATE	REVISIONS DESCRIPTIONS	BY	CH'D	CCO#
1	03/04/08	BARRIER MODIFICATIONS	JS BM	RG SE	44

CONTRACT CHANGE ORDER NO. _____
SHEET _____ OF _____

DETAILS
SAS SUPERSTRUCTURE ROADWAY EASTBOUND
PANEL UP-208 SCHEDULE

NO SCALE

E-154

THIS PLAN IS ACCURATE FOR ELECTRICAL WORK ONLY.

EJL	2/04	REVISED BY	DATE REVISED	CALCULATED/ DESIGNED BY	CHECKED BY
DATE 8/01	12/01				
JP	BL				

DESIGN OVERSIGHT — BEHZAD GOLEMOHAMMADI

STATE OF CALIFORNIA - DEPARTMENT OF TRANSPORTATION — Caltrans

FOR REDUCED PLANS ORIGINAL SCALE IS IN MILLIMETERS 0 20 40 60 80

DGN FILE = T:\13103\MS\pse\SAS Struc\CCO\SAS CC044\04-0120f1_0203R01.dgn
USERNAME = florico

CU 04251 | EA 0120F1

LAST REVISION 00-00-00 — DATE PLOTTED => 5/22/2008 — TIME PLOTTED => 10:51:34 AM

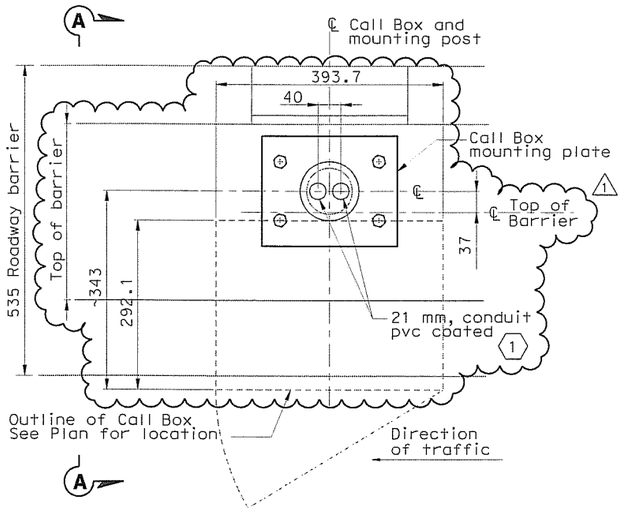

PLAN

CONDUIT STUB AND MOUNTING
OF CALL BOX AT BARRIER
SCALE 1:4

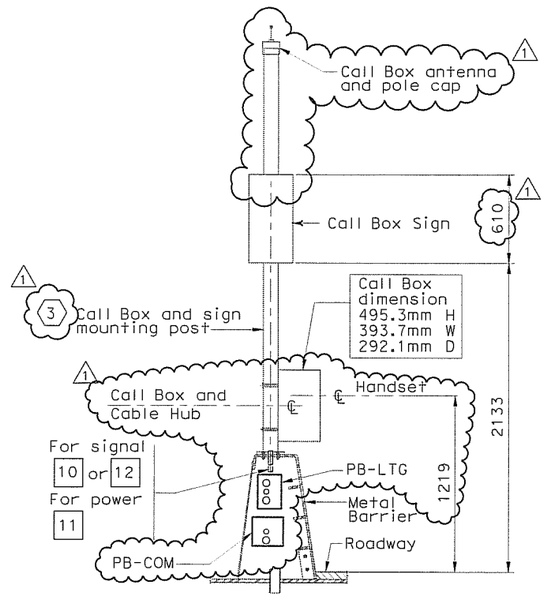

SECTION A-A

SCALE 1:20

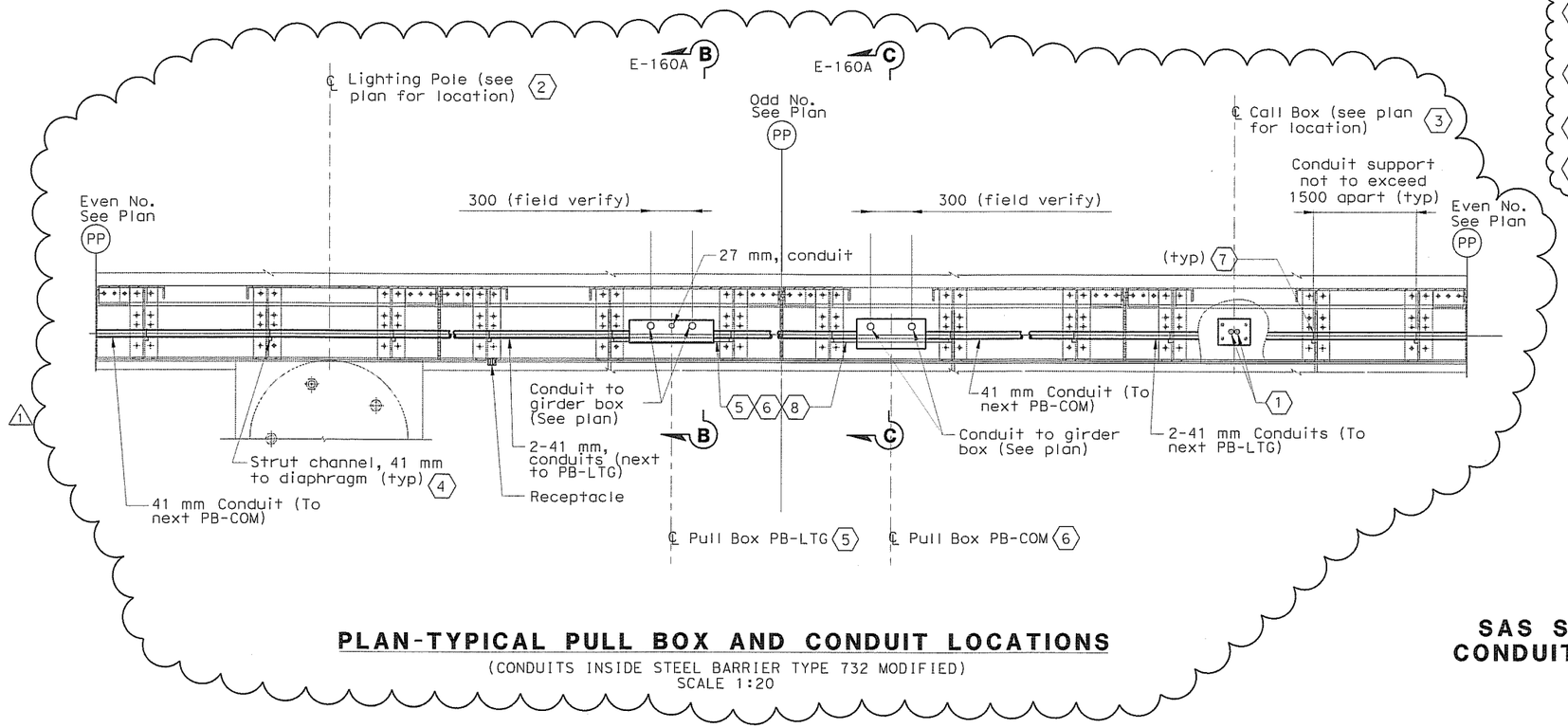

PLAN-TYPICAL PULL BOX AND CONDUIT LOCATIONS

(CONDUITS INSIDE STEEL BARRIER TYPE 732 MODIFIED)
SCALE 1:20

DIST	COUNTY	ROUTE	KILOMETER POST TOTAL PROJECT	SHEET No	TOTAL SHEETS
04	SF	80	13.2/13.9	207 R1	1204

Jens Erlingsson 12/19/02
REGISTERED ELECTRICAL ENGINEER DATE

12-6-04
PLANS APPROVAL DATE

JENS ERLINGSSON No. 8249 Exp. 9/30/06 ELECTRICAL — REGISTERED PROFESSIONAL ENGINEER — STATE OF CALIFORNIA

PB POWER, Inc.
A Parsons Brinckerhoff Company
303 Second St., Suite 700N
San Francisco, CA 94107-1317

The State of California or its officers or agents shall not be responsible for the accuracy or completeness of electronic copies of this plan sheet.

Caltrans now has a web site! To get to the web site, go to http://www.dot.ca.gov

NOTES:

1. References:
   - For pull box schedule, see Sheet E-169.
   - For light pole schedule, see Sheet E-166.
   - For call box schedule, see Sheet E-397
2. For location of pull boxes inside girder, see Sheet E-35 through E-140.
3. For mounting hole detail for call box on roadway metal barrier, see sheet AS-13.

SHEET NOTES:

1. Bond grounding bushing to pole ground lug with #6 bare copper wire.
2. For conduit location inside lighting pole, see Sheet E-161.
3. For call box mounting detail, see AS Sheets.
4. For typical conduit support locations inside barrier diaphragm, see Details 1, 2, and 3 of Sheet E-160A.
5. Locate Pull Box at approximate center of diaphragm. For typical PB-LTG and conduit support inside barrier diaphragm, see Details 4 and 6 sheet E-160A.
6. Locate Pull Box at approximate center of diaphragm. For typical PB-COM and conduit support inside barrier diaphragm, see Detail 5 sheet E-160A.
7. Provide conduit clamp for each conduit.
8. Strut channel, 41 mm. support for pull box and installed by Contractor.

S. A. ESTOQUE, JR. No. E-10151 Exp. 12/31/2008 ELECTRICAL — REGISTERED PROFESSIONAL ENGINEER — STATE OF CALIFORNIA

FOR REVISION ONLY

REQUEST FOR INFORMATION NOT ADDRESSED IN THIS CCO REMAIN IN FORCE

MARK	DATE	DESCRIPTIONS (REVISIONS)	BY	CH'D	CCO#
1	03/04/08	BARRIER MODIFICATIONS	JS BM	RG SE	44

CONTRACT CHANGE ORDER NO. _____
SHEET _____ OF _____

DETAILS
SAS SUPERSTRUCTURE ROADWAY CONDUIT AND PULL BOX LOCATIONS

SCALE AS NOTED

E-160

CALCULATED/ DESIGNED BY	FK	DATE 11/02	REVISED BY
CHECKED BY	IAH	11/02	DATE REVISED

DESIGN OVERSIGHT — BEHZAD GOLEMOHAMMADI

STATE OF CALIFORNIA - DEPARTMENT OF TRANSPORTATION — Caltrans

THIS PLAN IS ACCURATE FOR ELECTRICAL WORK ONLY.

ALL DIMENSIONS ARE IN MILLIMETERS UNLESS OTHERWISE SHOWN.

FOR REDUCED PLANS ORIGINAL SCALE IS IN MILLIMETERS 0 20 40 60 80

DGN FILE = T:\13105\MS\pse\SAS Struc\CCO\SAS CC044\04-0120F1_02CTR01.dgn
USERNAME = florico

CU 04251 | EA 0120F1

LAST REVISION 00-00-00 — DATE PLOTTED = 5/22/2008 — TIME PLOTTED = 10:52:00 AM

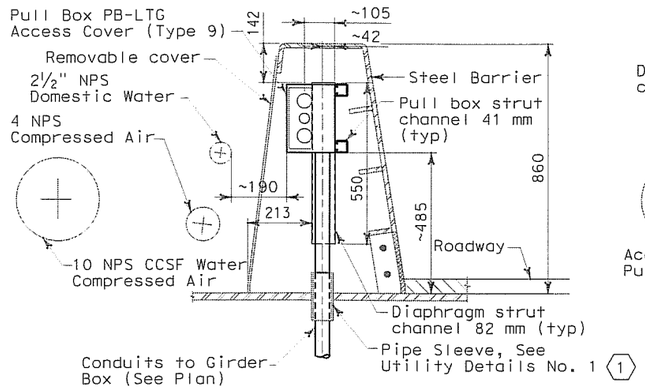

SECTION B-B

TYPICAL PULL BOX PB-LTG
AND CONDUIT LOCATION (E5)
SCALE 1:10 (E2) (SIMILAR)

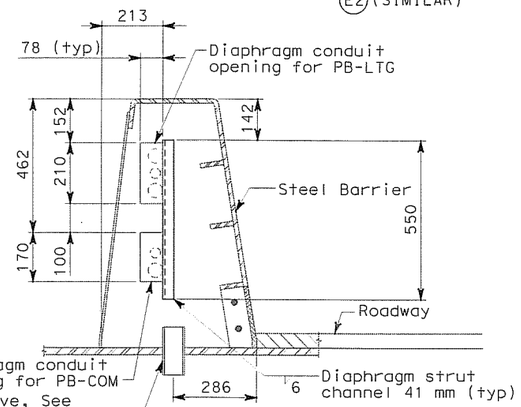

DETAIL 1

TYPICAL CONDUIT SUPPORT
THROUGH DIAPHRAGM (E2)
SCALE 1:10

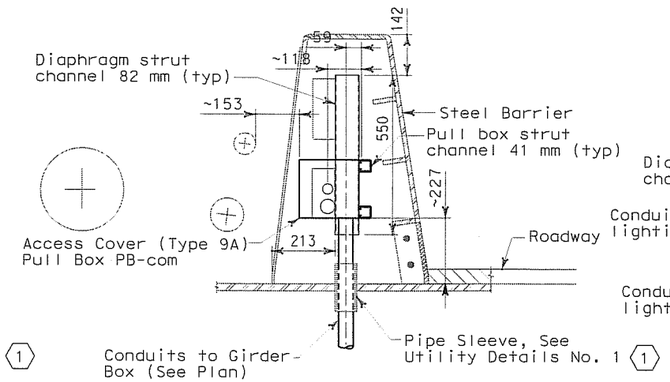

SECTION C-C

TYPICAL PULL BOX PB-COM
AND CONDUIT LOCATION (E5)
SCALE 1:10 (E2) (SIMILAR)

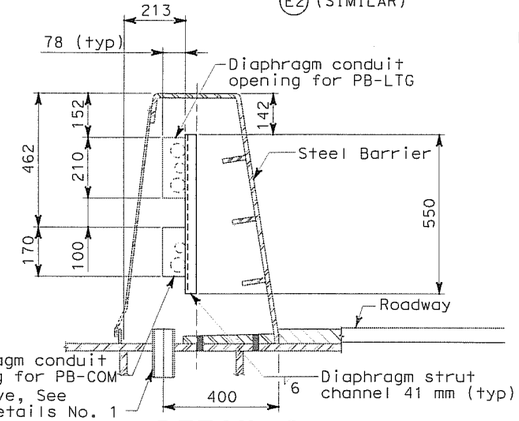

DETAIL 2

TYPICAL CONDUIT SUPPORT
THROUGH DIAPHRAGM (E5)
SCALE 1:10

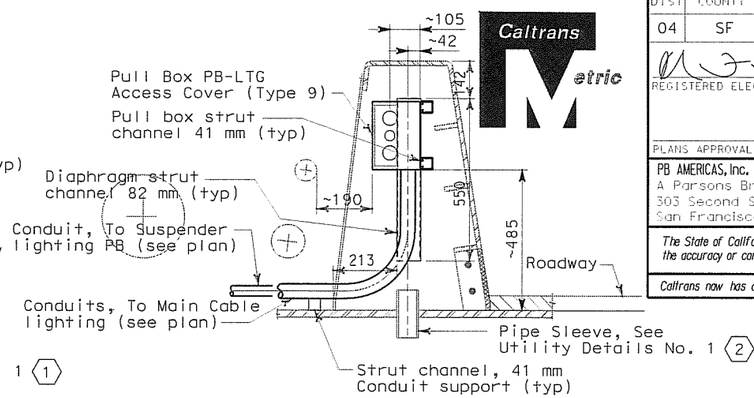

DETAIL 6

TYPICAL CONDUIT LOCATION FROM
PULL BOX PB-LTG TO SUSPENDER AND (E5)
MAIN CABLE LIGHTING (E2) (SIMILAR)
SCALE 1:10

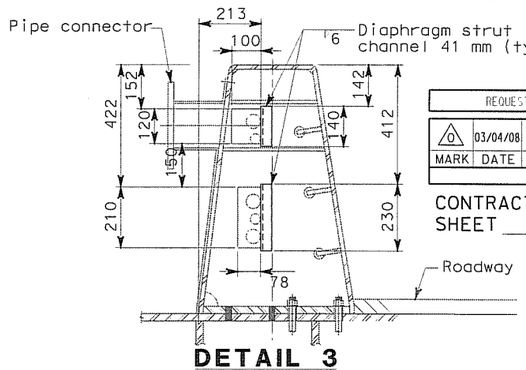

DETAIL 3

AT BARRIER WITH MOUNTED SIGNS
CONDUIT SUPPORT DIAPHRAGM E5 (PP38 + 1.250)
CONDUIT SUPPORT DIAPHRAGM E2 (PP38 + 1.250)
SCALE 1:10

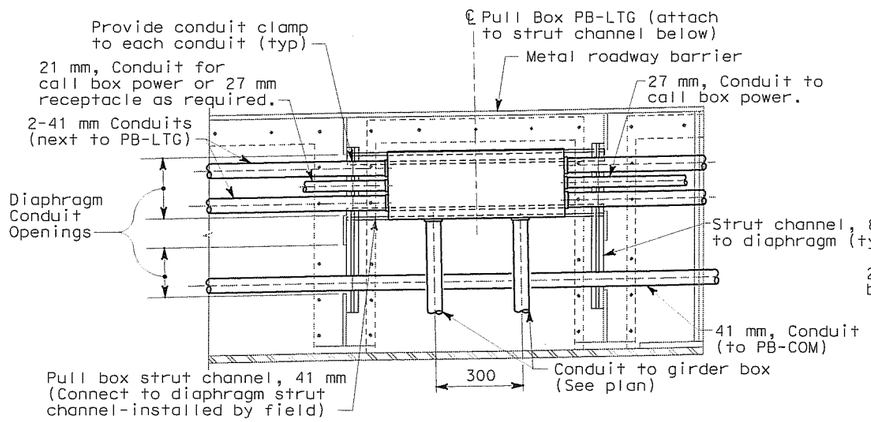

DETAIL 4

TYPICAL CONDUIT SUPPORT
PULL BOX PB-LTG MOUNTING
SCALE 1:10

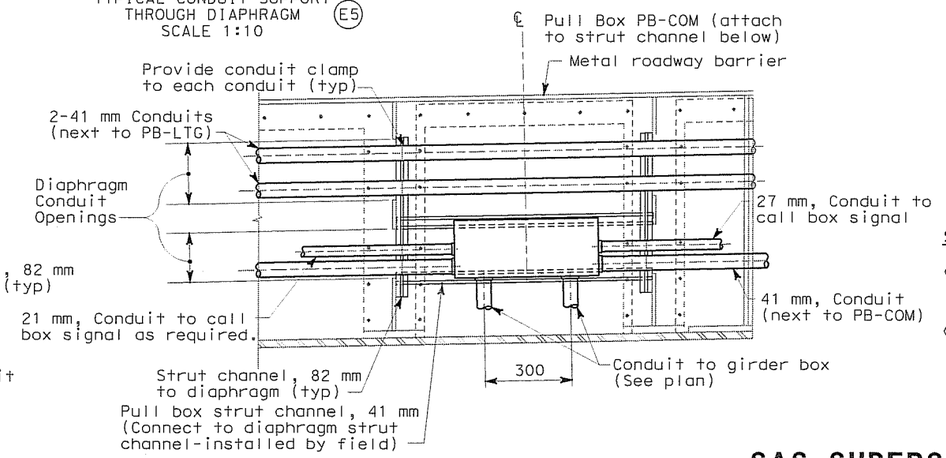

DETAIL 5

TYPICAL CONDUIT SUPPORT
PULL BOX PB-COM MOUNTING
SCALE 1:10

NOTES:

1. References:
   - For pull box schedule, see Sheet E-169.
   - For barrier details, see structural drawings.
2. For location of pull boxes inside girder, see Sheet E-135 through E-140.

SHEET NOTES:

(1) To prevent moisture from passing inside the sleeve, the Contractor shall install sealant between the sleeve and conduit.

(2) Spare pipe sleeves shall be capped on both ends.

DETAILS
SAS SUPERSTRUCTURE ROADWAY
CONDUIT AND PULL BOX LOCATIONS

SCALE AS NOTED

DIST	COUNTY	ROUTE	KILOMETER POST TOTAL PROJECT	SHEET No	TOTAL SHEETS
04	SF	80	13.2/13.9	207 S1	1204

REGISTERED ELECTRICAL ENGINEER — 9/18/2007 DATE

REGISTERED PROFESSIONAL ENGINEER — MAXWELL FUMIO TAKATA — No. E 8651 — Exp. 9/30/2008 — ELECTRICAL — STATE OF CALIFORNIA

PLANS APPROVAL DATE

PB AMERICAS, Inc.
A Parsons Brinckerhoff Company
303 Second St., Suite 700N
San Francisco, CA 94107-1317

The State of California or its officers or agents shall not be responsible for the accuracy or completeness of electronic copies of this plan sheet.

Caltrans now has a web site! To get to the web site, go to http://www.dot.ca.gov

REQUEST FOR INFORMATION NOT ADDRESSED IN THIS CCO REMAIN IN FORCE

MARK	DATE	REVISIONS	BY	CH'D	CCO#
0	03/04/08	BARRIER MODIFICATIONS	JS BM	RG SE	44

CONTRACT CHANGE ORDER NO. _____
SHEET _____ OF _____

DATE	REVISED BY	DATE REVISED
09/07	JS	RG 09/07

CALCULATED/DESIGNED BY
CHECKED BY

DESIGN OVERSIGHT
BEHZAD GOLEMOHAMMADI

STATE OF CALIFORNIA - DEPARTMENT OF TRANSPORTATION
Caltrans

THIS PLAN IS ACCURATE FOR ELECTRICAL WORK ONLY.

ALL DIMENSIONS ARE IN MILLIMETERS UNLESS OTHERWISE SHOWN.

FOR REDUCED PLANS ORIGINAL SCALE IS IN MILLIMETERS 0 20 40 60 80

DGN FILE = T:\13103\MS\pse\SAS Struc\CCO\SAS CC044\04-0120F1_0207501.dgn
USERNAME = florico

CU 04251

EA 0120F1

LAST REVISION 00-00-00

DATE PLOTTED = 5/22/2008
TIME PLOTTED = 10:53:05 AM

E-160A

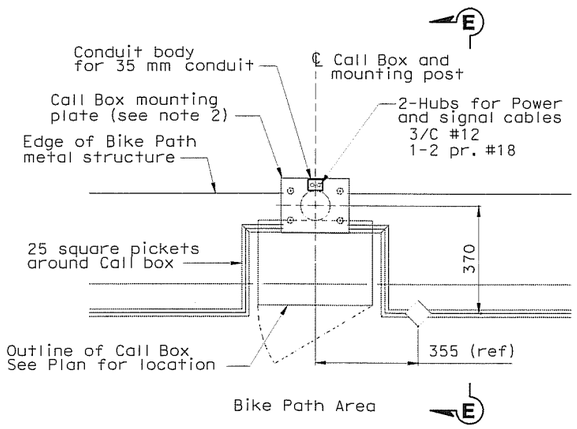

PLAN

CALL BOX MOUNTING AT BIKE PATH
SCALE 1:10

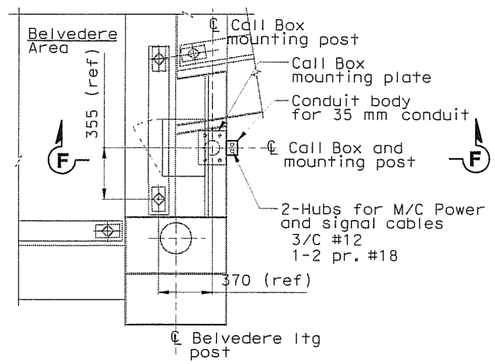

PLAN

CALL BOX MOUNTING AT BELVEDERE
SCALE 1:20

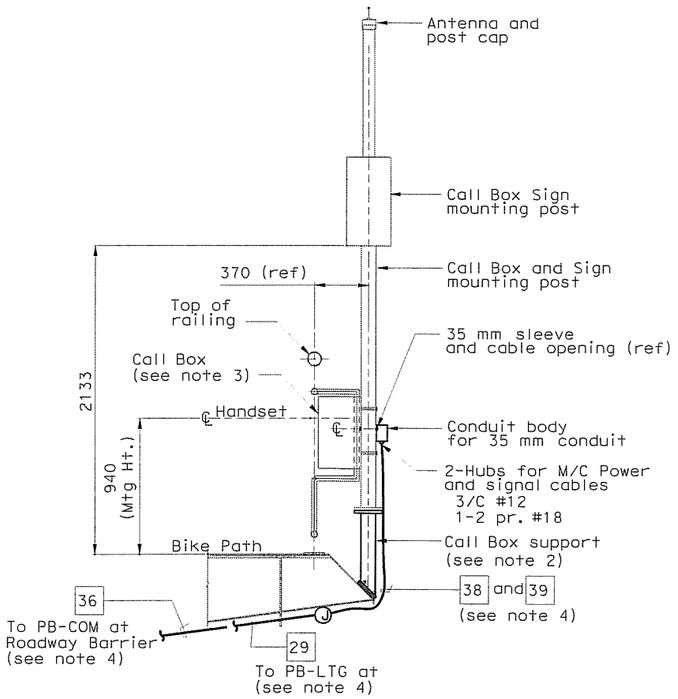

SECTION E-E

SCALE 1:20

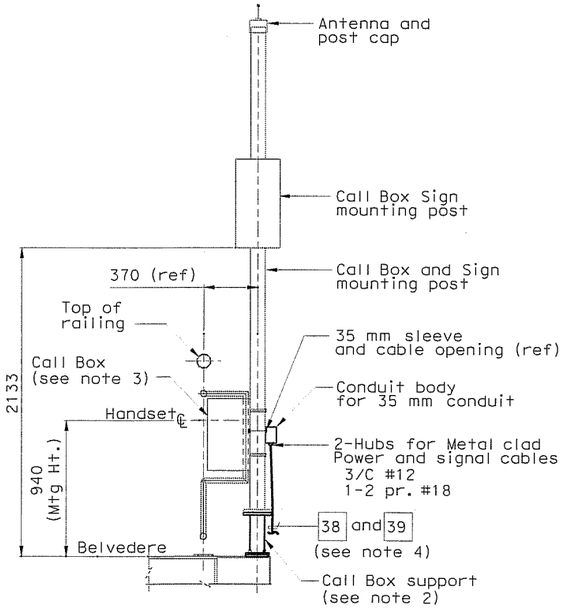

SECTION F-F

SCALE 1:20

NOTES:

1. References:
   - For call box schedule, see Sheet E-397.
2. For call box support, see drawing AS-2.
3. Call box dimensions are 495.8 mm high x 393.7 mm wide x 292.1 mm depth.
4. Field to locate support for metal clad and conduit below Bike Path structure.

DIST	COUNTY	ROUTE	KILOMETER POST TOTAL PROJECT	SHEET No.	TOTAL SHEETS
04	SF	80	13.2/13.9	207 S2	1204

REGISTERED ELECTRICAL ENGINEER — DATE 9/18/2007

REGISTERED PROFESSIONAL ENGINEER — MAXWELL FUMIO TAKATA — No. E 8651 — Exp. 9/30/2008 — ELECTRICAL — STATE OF CALIFORNIA

PLANS APPROVAL DATE

PB AMERICAS, Inc.
A Parsons Brinckerhoff Company
303 Second St., Suite 700N
San Francisco, CA 94107-1317

The State of California or its officers or agents shall not be responsible for the accuracy or completeness of electronic copies of this plan sheet.

Caltrans now has a web site! To get to the web site, go to http://www.dot.ca.gov

REQUEST FOR INFORMATION NOT ADDRESSED IN THIS CCO REMAIN IN FORCE					
MARK	DATE	REVISIONS DESCRIPTIONS	BY	CH'D	CCO#
0	03/04/08	BARRIER MODIFICATIONS	EL	RG SE	44

CONTRACT CHANGE ORDER NO. _____
SHEET _____ OF _____

DETAILS
SAS SUPERSTRUCTURE ROADWAY CONDUIT AND PULL BOX LOCATIONS

SCALE AS NOTED

E-160B

REVISED BY	DATE REVISED
JS	09/07
RG	09/07

CALCULATED/DESIGNED BY
CHECKED BY

DESIGN OVERSIGHT
BEHZAD GOLEMOHAMMADI

STATE OF CALIFORNIA - DEPARTMENT OF TRANSPORTATION
Caltrans

THIS PLAN IS ACCURATE FOR ELECTRICAL WORK ONLY.

ALL DIMENSIONS ARE IN MILLIMETERS UNLESS OTHERWISE SHOWN.

FOR REDUCED PLANS ORIGINAL SCALE IS IN MILLIMETERS 0 20 40 60 80

DGN FILE = T:\13103\MS\pse\SAS Struc\CCO\SAS CC044\04-0120F1_02d7S02.dgn
USERNAME = florico

CU 04251

EA 0120F1

LAST REVISION 00-00-00
DATE PLOTTED = 5/22/2008
TIME PLOTTED = 10:55:33 AM

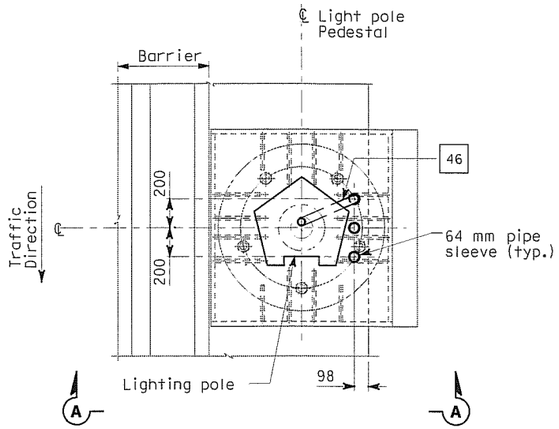

PLAN

CONDUIT STUB-UP PLAN FOR ROADWAY
LIGHTING ON A METAL BASE
SCALE 1:20

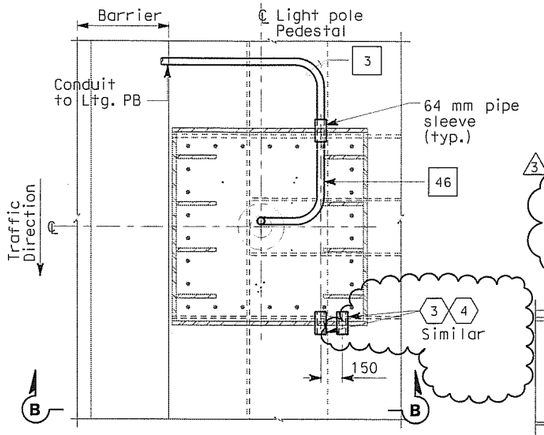

PLAN

CONDUIT STUB-UP PLAN FOR ROADWAY
LIGHTING ON A METAL BASE
AT PIER E2 ONLY
SCALE 1:20

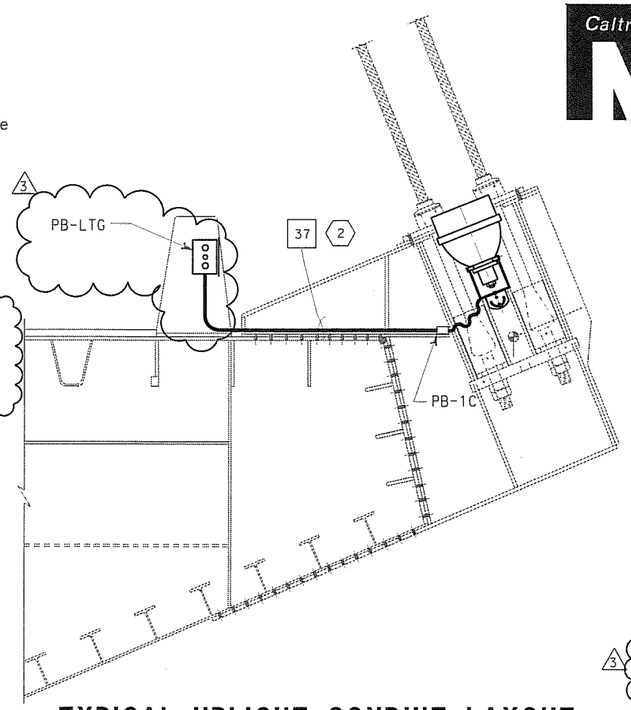

TYPICAL UPLIGHT CONDUIT LAYOUT

SCALE 1:20

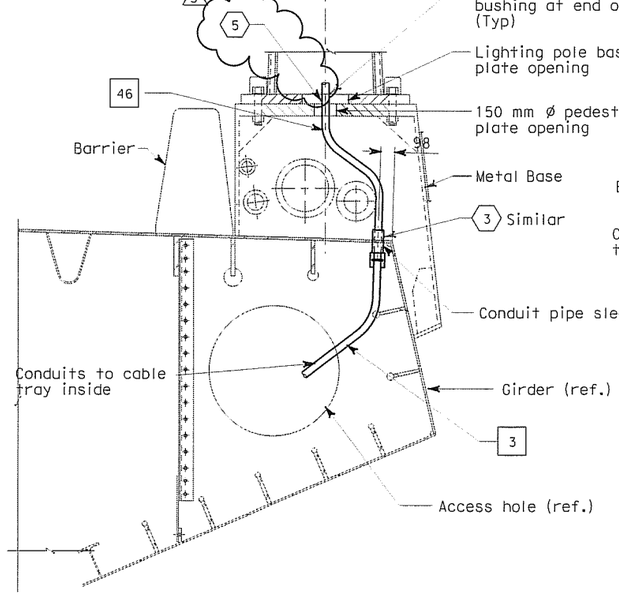

SECTION A-A

LIGHT POLE METAL PEDESTAL
CONDUIT TYPICAL INSTALLATION
SCALE 1:20

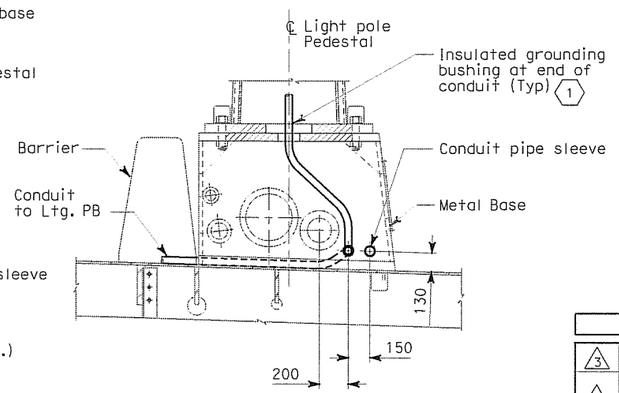

SECTION B-B

SCALE 1:20

SHEET NOTES:

1. Bond grounding bushing to ground lug of lighting pole with #6 bare copper wire.
2. Conduit shall be clear of all piping and pipe sleeve. Route conduit on top of deck plate, outside of girder box.
3. See Utility Detail No. 1 (Sheet No. 965 of 1204) for conduit penetration through girder plate and lighting pole metal base. The Contractor shall install sealant between the sleeve and conduit to prevent water or moisture from passing inside the sleeve.
4. Cap spare sleeves for future use where noted.
5. Ensure that the maximum of three conduits passing through the 150 mm ø pedestal plate opening are separated as much as possible from each other.

NOTES:

1. References:
   - For lighting pole schedule, see sheet E-82.
   - For location of pull boxes inside girder, see sheets E-96 thru E-101.
   - For luminaire support details, see structural sheets.
2. Roadway Barrier Receptacle, see Detail 1, sheet E-68.
3. For conduit and pull box details in steel barrier, see drawings E-160 and E-160A.

S. A. ESTOQUE, JR. — No. E-10151 — Exp. 12/31/2008 ELECTRICAL — REGISTERED PROFESSIONAL ENGINEER — STATE OF CALIFORNIA

FOR REVISION ONLY

REQUEST FOR INFORMATION NOT ADDRESSED IN THIS CCO REMAIN IN FORCE					
3	03/04/08	BARRIER MODIFICATIONS	JS BM	SE RG	44
2	02/19/08	ELECTRICAL MODIFICATIONS	MP EL RG	RR	42
1	10/16/06	REVISED SHEET NOTES	LR	MG	11
MARK	DATE	DESCRIPTIONS	BY	CH'D	CCO#
REVISIONS					

CONTRACT CHANGE ORDER NO._____
SHEET_____ OF _____

DIST	COUNTY	ROUTE	KILOMETER POST TOTAL PROJECT	SHEET NO.	TOTAL SHEETS
04	SF	80	13.2/13.9	208R3	1204

JENS ERLINGSSON — REGISTERED ELECTRICAL ENGINEER — 12/19/02 DATE

JENS ERLINGSSON No. 8249 Exp. 9/30/06 ELECTRICAL — REGISTERED PROFESSIONAL ENGINEER — STATE OF CALIFORNIA

12-6-04
PLANS APPROVAL DATE

PB POWER, Inc.
A Parsons Brinckerhoff Company
303 Second St., Suite 700N
San Francisco, CA 94107-1317

The State of California or its officers or agents shall not be responsible for the accuracy or completeness of electronic copies of this plan sheet.

Caltrans now has a web site! To get to the web site, go to http://www.dot.ca.gov

Caltrans Metric

DETAILS
SAS SUPERSTRUCTURE ROADWAY EASTBOUND CONDUIT LOCATIONS

SCALE AS NOTED

E-161

ALL DIMENSIONS ARE IN MILLIMETERS UNLESS OTHERWISE SHOWN.

FOR REDUCED PLANS ORIGINAL SCALE IS IN MILLIMETERS 0 20 40 60 80

DGN FILE = f:\13103\MS\pse\SAS Struc\CCO\SAS CCO44\04-0120f1_0208R03.dgn
USERNAME = garciar

CU 04251 | EA 0120F1

LAST REVISION 00-00-00 | DATE PLOTTED = 6-9-2008 | TIME PLOTTED = 4:39:36 PM

STATE OF CALIFORNIA - DEPARTMENT OF TRANSPORTATION — Caltrans

DESIGN OVERSIGHT — BEHZAD GOLEMOHAMMADI

CALCULATED/ DESIGNED BY	KG	DATE 10/01	REVISED BY	DATE REVISED
CHECKED BY	AB	11/01		

DIST	COUNTY	ROUTE	KILOMETER POST / TOTAL PROJECT	SHEET No	TOTAL SHEETS
04	SF	80	13.2/13.9	209 R2	1204

REGISTERED ELECTRICAL ENGINEER — 12/19/02 DATE

12-6-04
PLANS APPROVAL DATE

JENS ERLINGSSON No. 8249 Exp. 9/30/06 ELECTRICAL — REGISTERED PROFESSIONAL ENGINEER — STATE OF CALIFORNIA

PB POWER, Inc.
A Parsons Brinckerhoff Company
303 Second St., Suite 700N
San Francisco, CA 94107-1317

The State of California or its officers or agents shall not be responsible for the accuracy or completeness of electronic copies of this plan sheet.

Caltrans now has a web site! To get to the web site, go to http://www.dot.ca.gov

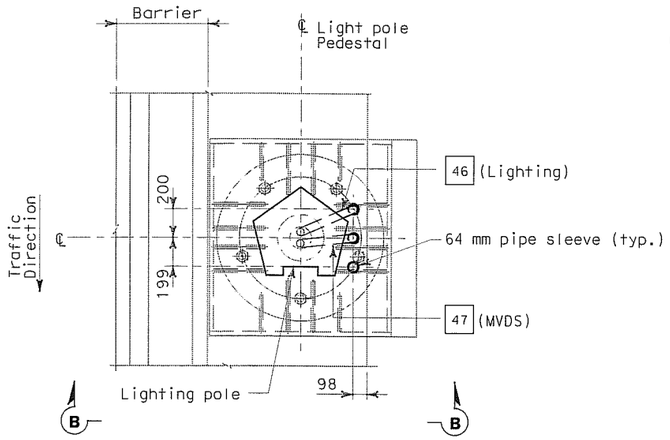

PLAN

CONDUIT STUB-UP PLAN FOR ROADWAY LIGHTING AND MVDS ON METAL BASE
SCALE 1:20

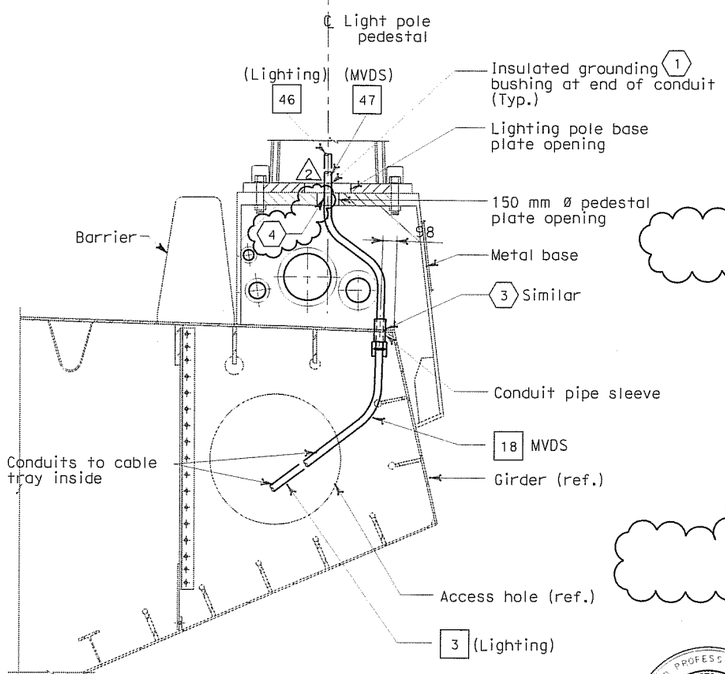

SECTION B-B

SCALE 1:20

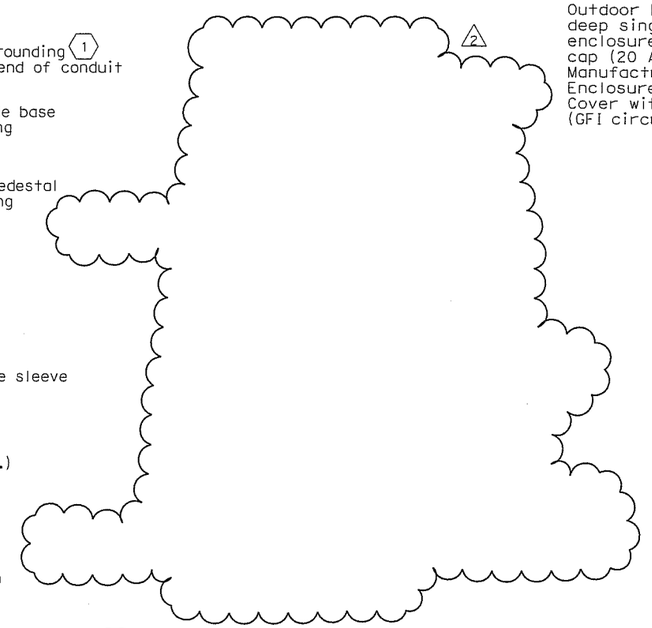

Outdoor Barrier receptacle with deep single gang, corrosion resistant enclosure and weatherproof threaded cap (20 A, 125 V, 3 W, straight blade) Manufacturer Crouse Hinds or equal
Enclosure = FDLA2 (Corro-free)
Cover with receptacle = DS222
(GFI circuit breaker protection)

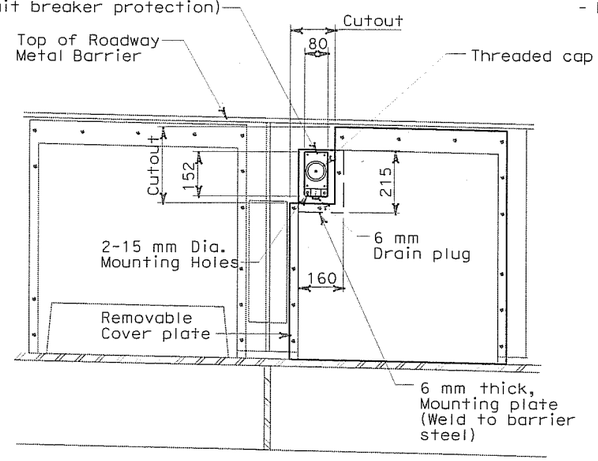

DETAIL 1

(TYPICAL ROADWAY BARRIER RECEPTACLE LOCATION)
SCALE: 1:10

SHEET NOTES:

1. Bond grounding bushing to ground lug of lighting pole with #6 bare copper wire.
2. Deleted
3. See Utility Detail No. 1 (Sheet No. 965 of 1204) for conduit penetration through girder plate and lighting pole metal base. The Contractor shall install sealant between the sleeve and conduit to prevent water or moisture from passing inside the sleeve.
4. Ensure that the maximum of three conduits passing through the 150 mm ø pedestal plate opening are separated as much as possible from each other.

NOTES:

1. References:
   - For installation and typical details of TOS equipment, see sheets E-341 thru E-357.
   - For pull box schedule, see sheet E-169

REGISTERED PROFESSIONAL ENGINEER — S. A. ESTOQUE, JR. No. E-10151 Exp. 12/31/2008 ELECTRICAL — STATE OF CALIFORNIA

FOR REVISION ONLY

MARK	DATE	DESCRIPTIONS	BY	CH'D	CCO#
		REVISIONS			
2	03/04/08	BARRIER MODIFICATIONS	JS BM	RG SE	44
1	02/19/08	ELECTRICAL MODIFICATIONS	MP EL RG	RR	42

REQUEST FOR INFORMATION NOT ADDRESSED IN THIS CCO REMAIN IN FORCE

CONTRACT CHANGE ORDER NO. _____
SHEET _____ OF _____

DETAILS
SAS SUPERSTRUCTURE ROADWAY EASTBOUND CONDUIT LOCATIONS

SCALE AS NOTED

E-162

CALCULATED/ DESIGNED BY	KG
CHECKED BY	AB
DATE	10/01 / 11/01
REVISED BY	
DATE REVISED	

STATE OF CALIFORNIA - DEPARTMENT OF TRANSPORTATION — Caltrans
DESIGN OVERSIGHT — BEHZAD GOLEMOHAMMADI

LAST REVISION 00-00-00 — DATE PLOTTED = 5/22/2008 — TIME PLOTTED = 10:54:15 AM

FOR REDUCED PLANS ORIGINAL SCALE IS IN MILLIMETERS — 0 20 40 60 80

DGN FILE = T:\13103\MS\pse\SAS Struc\CCO\SAS CCO44\04-0120F1_0209R02.dgn
USERNAME = florico

CU 04251 | EA 0120F1

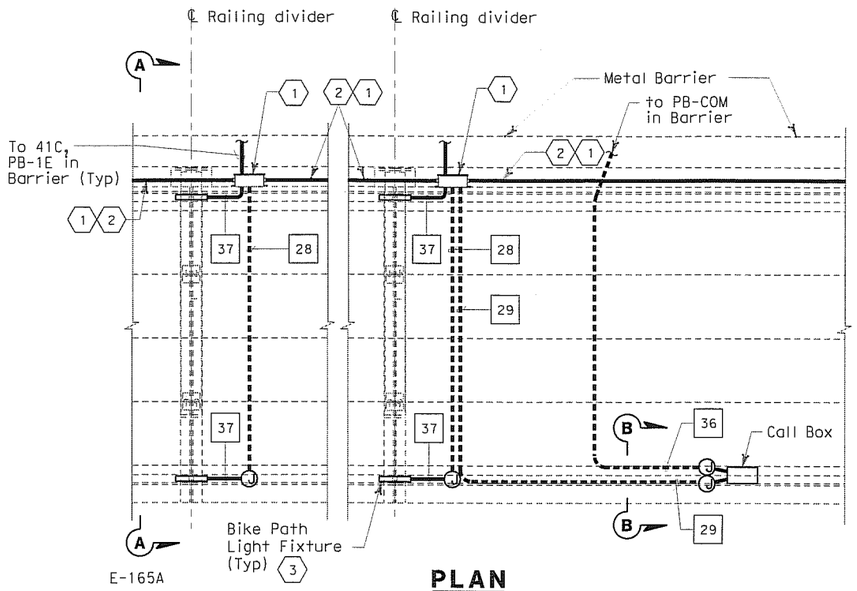

PLAN

TYPICAL BIKE PATH LIGHTING AND CALL BOX CONDUIT ARRANGEMENT
SCALE 1:50

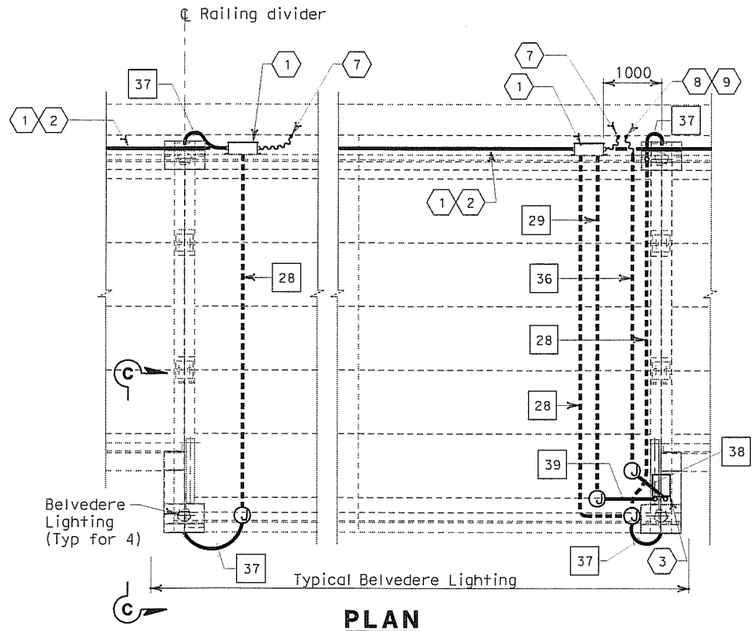

PLAN

CONDUIT ARRANGEMENT
SCALE 1:50

DIST	COUNTY	ROUTE	KILOMETER POST TOTAL PROJECT	SHEET NO	TOTAL SHEETS
04	SF	80	13.2/13.9	210 R2	1204

JENS ERLINGSSON 12/19/02
REGISTERED ELECTRICAL ENGINEER DATE

12-6-04
PLANS APPROVAL DATE

REGISTERED PROFESSIONAL ENGINEER — JENS ERLINGSSON No. 8249 Exp. 9/30/06 ELECTRICAL — STATE OF CALIFORNIA

PB POWER, Inc.
A Parsons Brinckerhoff Company
303 Second St., Suite 700N
San Francisco, CA 94107-1317

The State of California or its officers or agents shall not be responsible for the accuracy or completeness of electronic copies of this plan sheet.

Caltrans now has a web site! To get to the web site, go to http://www.dot.ca.gov

SHEET NOTES:

1. PB-1E and conduit support, mounting details see sheet E-165A.
2. 41C, continued to the next PB-1E mounted along side at Bike Path deck.
3. For bike path light detail, see sheet E-172.
4. Weld connectors for conduit support under bike path.
5. Field locate support for metal-clad cable.
6. For connection and mounting details of call box on railings, refer to structural railing details.
7. 41C, Liquidtight flexible metal conduit to RGS in roadway concrete barrier (PB-1E). (2)
8. 41C, Liquidtight flexible metal conduit to RGS in roadway concrete barrier (PB-COM). (2)
9. Provide reducer as required.
10. For connection and mounting details, see sheet E-172. Metal clad cable is supplied and part of Bike Path lighting assembly. Cable is shown solid for detail clarity only.
11. For details of Belvedere, see sheet E-173.
12. Weld connectors for conduit support under Bike Path. Field to locate support for conduit as required.
13. (2) For call box mounting detail and connection, see sheet E-160B.

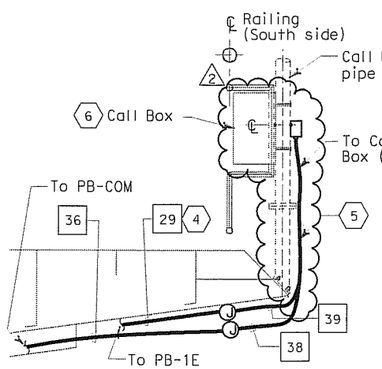

SECTION B-B

CONDUITS TO CALL BOX
SCALE 1:20

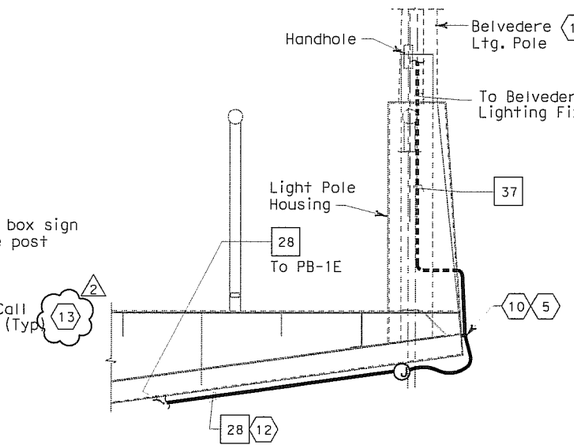

SECTION C-C

CONDUITS TO BELVEDERE LIGHTING
SCALE 1:20

NOTES:

1. All exposed conduits and fittings installed between the roadway and the bike path shall be PVC coated galvanized steel unless noted otherwise. (2)
2. See sheets E-135 through E-140 for SAS Superstructure Roadway Plans.

DETAILS
SAS SUPERSTRUCTURE ROADWAY EASTBOUND
TYPICAL BIKE PATH PLANS AND SECTIONS

SCALE AS NOTED

E-165

S. A. ESTOQUE, JR. — REGISTERED PROFESSIONAL ENGINEER — No. E-10151 Exp. 12/31/2008 ELECTRICAL — STATE OF CALIFORNIA

FOR REVISION ONLY

REQUEST FOR INFORMATION NOT ADDRESSED IN THIS CCO REMAIN IN FORCE

MARK	DATE	REVISIONS DESCRIPTIONS	BY	CH'D	CCO#
2	03/04/08	BARRIER MODIFICATIONS	JS BM	RG SE	44
1	02/19/08	ELECTRICAL MODIFICATIONS	MP EL	RR	42

CONTRACT CHANGE ORDER NO._____
SHEET_____ OF_____

THIS PLAN IS ACCURATE FOR ELECTRICAL WORK ONLY.

ALL DIMENSIONS ARE IN MILLIMETERS UNLESS OTHERWISE SHOWN.

FOR REDUCED PLANS ORIGINAL SCALE IS IN MILLIMETERS 0 20 40 60 80

DGN FILE =>T:\13103\MS\pse\SAS Struc\CCO\SAS CC044\04-0120F1_02|0R02.dgn
USERNAME =>florico

CU 04251 | EA 0120F1

STATE OF CALIFORNIA - DEPARTMENT OF TRANSPORTATION — Caltrans

DESIGN OVERSIGHT — BEHZAD GOLEMOHAMMADI

CALCULATED/ DESIGNED BY	CHECKED BY	DATE	REVISED BY	DATE REVISED
KG	AB	10/01		11/01

LAST REVISION 00-00-00
DATE PLOTTED => 5/22/2008
TIME PLOTTED => 10:54:36 AM

DIST	COUNTY	ROUTE	KILOMETER POST TOTAL PROJECT	SHEET NO	TOTAL SHEETS
04	SF	80	13.2/13.9	217 R1	1204

12/19/02
REGISTERED ELECTRICAL ENGINEER DATE

12-6-04
PLANS APPROVAL DATE

REGISTERED PROFESSIONAL ENGINEER — JENS ERLINGSSON No. 8249 Exp. 9/30/06 ELECTRICAL — STATE OF CALIFORNIA

PB POWER, Inc.
A Parsons Brinckerhoff Company
303 Second St., Suite 700N
San Francisco, CA 94107-1317

The State of California or its officers or agents shall not be responsible for the accuracy or completeness of electronic copies of this plan sheet.

Caltrans now has a web site! To get to the web site, go to http://www.dot.ca.gov

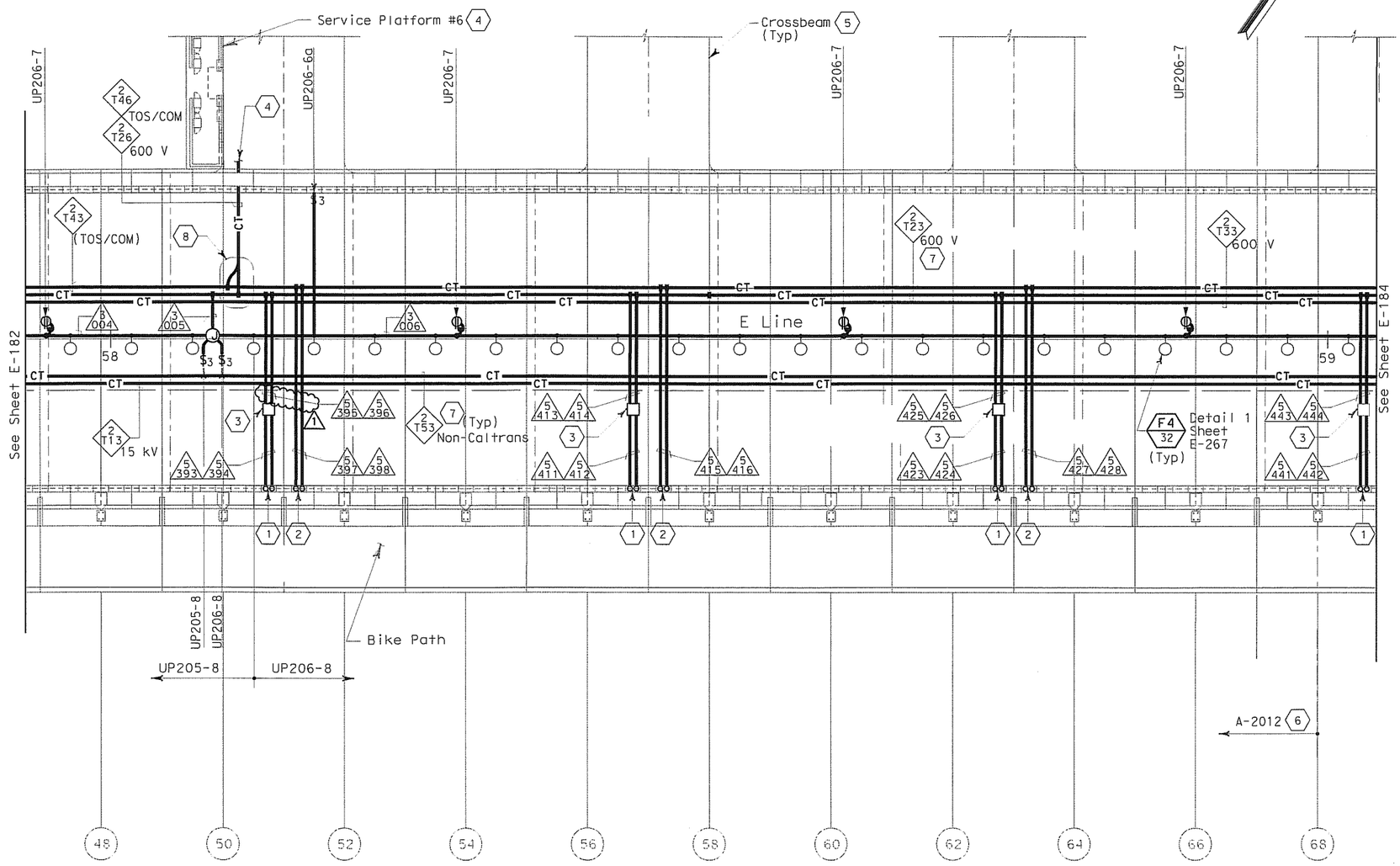

SAS SUPERSTRUCTURE - CONDUIT AND CABLE TRAY PLAN

SHEET NOTES:

1. Conduit up to PB-LTG located in barrier, see sheet E-137.
2. Conduit up to PB-COM located in barrier, see sheet E-137.
3. PB-2A, locate on top of floor.
4. For cable tray run and lighting inside crossbeam, see sheet E-116.
5. For lighting inside crossbeam, see sheet E-119.
6. For future light pipes, see sheets E-202 thru E-204. For light pipe schedule, see sheet E-217.
7. For cable tray & ground bar support, refer to sheet E-208.
8. For fiber splice tray detail. Refer to sheet E-355.

NOTES:

1. References:
   - TOS equipment is shown for conduit routing only. For typical details of TOS controller and devices, see sheets E-344 through E-357.
   - For types of pull boxes, splice boxes and enclosures, see sheet E-169.
   - For bridge grounding plan, see sheet E-196.
   - For circuit and conduit/cable tray schedules, see sheets starting at E-401.
2. For other work related to items not shown on this sheet, see Electrical Special Provisions.
3. The girder lighting fixtures are shown diagrammatically.Contractor shall install fixtures at railing posts with a maximum of 8000 mm between fixtures. For types and typical lighting fixture installation details, see sheet E-206.
4. The cable trays are shown diagrammatically. For typical girder cable tray plans and sections, see sheets E-207 and E-208.

REGISTERED PROFESSIONAL ENGINEER — FADI WALIEDDINE No. 11465 Exp. 12/31/2009 ELECTRICAL — STATE OF CALIFORNIA

FOR REVISION ONLY

REQUEST FOR INFORMATION NOT ADDRESSED IN THIS CCO REMAIN IN FORCE					
MARK	DATE	REVISIONS	BY	CH'D	CCO#
1	03/04/08	BARRIER MODIFICATIONS	TW	RG	44

CONTRACT CHANGE ORDER NO. _____
SHEET _____ OF _____

THIS PLAN IS ACCURATE FOR ELECTRICAL WORK ONLY.

ALL DIMENSIONS ARE IN METERS UNLESS OTHERWISE SHOWN

FOR REDUCED PLANS ORIGINAL SCALE IS IN MILLIMETERS 0 20 40 60 80

DGN FILE = T:\13103\MS\pse\SAS Struc\CCO\SAS CCO44\04-0120F1_02TR01.dgn
USERNAME = tlorico

CU 04251 | EA 0120F1

SAS SUPERSTRUCTURE GIRDER EASTBOUND
LIGHTING AND ELECTRICAL SYSTEMS
SCALE 1:200

E-183

CALCULATED/ DESIGNED BY	CHECKED BY	EDC	CYF
		DATE 08/02	08/02

REVISED BY	DATE REVISED

DESIGN OVERSIGHT — BEHZAD GOLEMOHAMMADI

STATE OF CALIFORNIA - DEPARTMENT OF TRANSPORTATION — Caltrans

LAST REVISION 00-00-00 — DATE PLOTTED = 5/22/2008 TIME PLOTTED = 10:54:57 AM 5/22/2008

DIST	COUNTY	ROUTE	KILOMETER POST TOTAL PROJECT	SHEET No	TOTAL SHEETS
04	SF	80	13.2/13.9	218 R2	1204

Jens Erlingsson 12/19/02
REGISTERED ELECTRICAL ENGINEER DATE

12-6-04
PLANS APPROVAL DATE

REGISTERED PROFESSIONAL ENGINEER — JENS ERLINGSSON No. 8249 Exp. 9/30/06 ELECTRICAL — STATE OF CALIFORNIA

PB POWER, Inc.
A Parsons Brinckerhoff Company
303 Second St., Suite 700N
San Francisco, CA 94107-1317

The State of California or its officers or agents shall not be responsible for the accuracy or completeness of electronic copies of this plan sheet.

Caltrans now has a web site! To get to the web site, go to http://www.dot.ca.gov

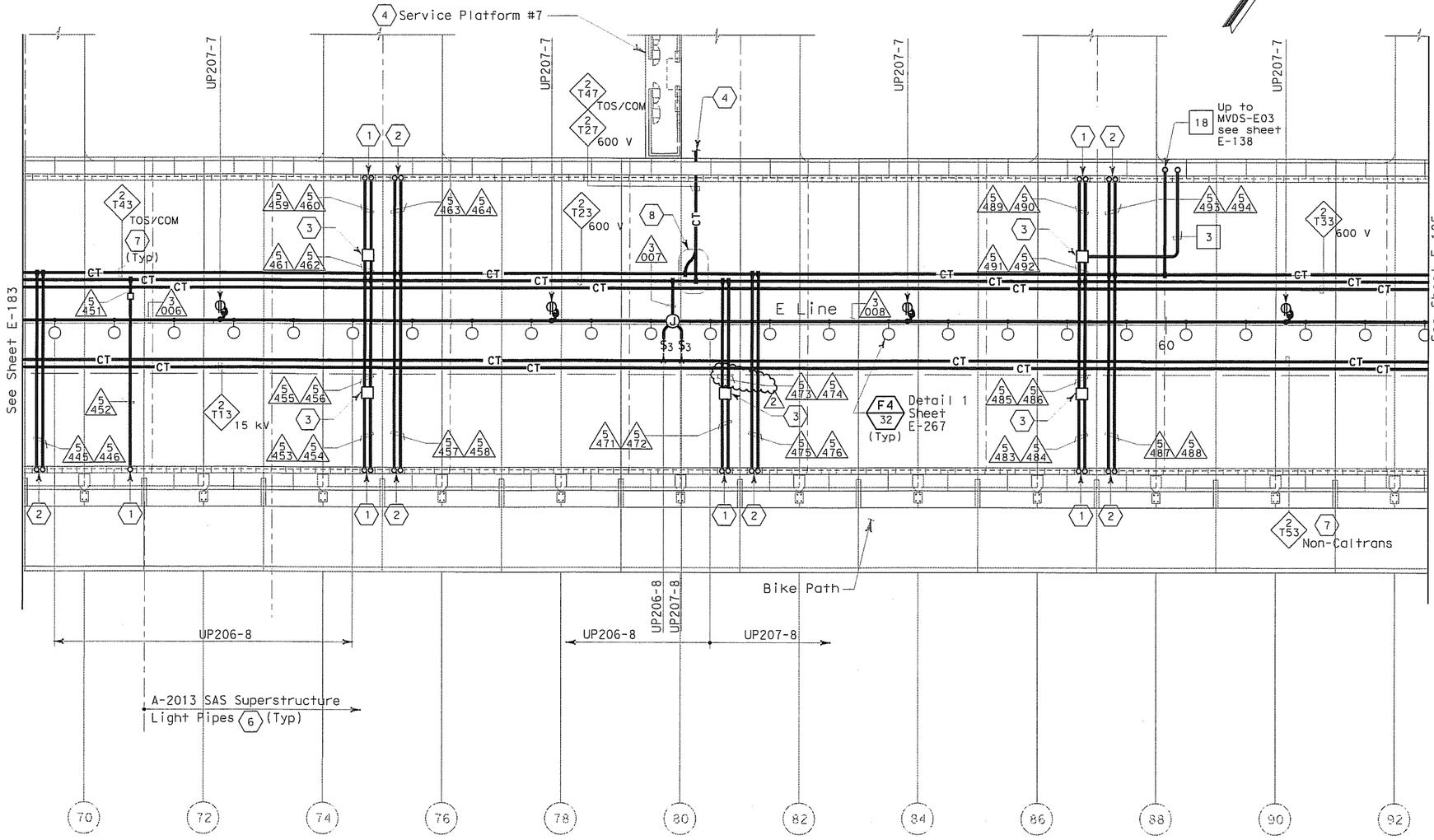

SAS SUPERSTRUCTURE - CONDUIT AND CABLE TRAY PLAN

SHEET NOTES:

1. Conduit up to PB-LTG located in barrier, see sheet E-138.
2. Conduit up to PB-COM located in barrier, see sheet E-138
3. PB-2A, locate on top of floor.
4. For cable tray run and lighting inside crossbeam, see sheet E-117.
5. For lighting inside crossbeam, see sheet E-119.
6. For future light pipes, see sheets E-202 thru E-204. For light pipe schedule, see sheet E-217.
7. For cable tray & ground bar support, refer to sheet E-208.
8. For fiber splice tray detail. Refer to sheet E-355.

NOTES:

1. References:
   - TOS equipment is shown for conduit routing only. For typical details of TOS controller and devices, see sheets E-344 through E-357.
   - For types of pull boxes, splice boxes and enclosures, see sheet E-169.
   - For bridge grounding plan, see sheet E-196.
   - For circuit and conduit/cable tray schedules, see sheets starting at E-401.
2. For other work related to items not shown on this sheet, see Electrical Special Provisions.
3. The girder lighting fixtures are shown diagrammatically.Contractor shall install fixtures at railing posts with a maximum of 8000 mm between fixtures. For types and typical lighting fixture installation details, see sheet E-206.
4. The cable trays are shown diagrammatically. For typical girder cable tray plans and sections, see sheets E-207 and E-208.

REGISTERED PROFESSIONAL ENGINEER — FADI WALIEDDINE No. 11465 Exp. 12/31/2009 ELECTRICAL — STATE OF CALIFORNIA

FOR REVISION ONLY

REQUEST FOR INFORMATION NOT ADDRESSED IN THIS CCO REMAIN IN FORCE					
2	03/04/08	BARRIER MODIFICATIONS	TW	RG	44
1	02/19/08	ELECTRICAL MODIFICATIONS	MP EL	RR	42
MARK	DATE	DESCRIPTIONS	BY	CH'D	CCO#
REVISIONS					

CONTRACT CHANGE ORDER NO._____
SHEET _____ OF _____

SAS SUPERSTRUCTURE GIRDER EASTBOUND
LIGHTING AND ELECTRICAL SYSTEMS

SCALE 1:200

E-184

STATE OF CALIFORNIA - DEPARTMENT OF TRANSPORTATION
Caltrans
DESIGN OVERSIGHT
BEHZAD GOLEMOHAMMADI

CALCULATED/ DESIGNED BY	EDC	DATE	REVISED BY
CHECKED BY	CYF	08/02	DATE REVISED

LAST REVISION 00-00-00
DATE PLOTTED = 5/22/2008
TIME PLOTTED = 10:55:32 AM

THIS PLAN IS ACCURATE FOR ELECTRICAL WORK ONLY.

ALL DIMENSIONS ARE IN METERS UNLESS OTHERWISE SHOWN.

FOR REDUCED PLANS ORIGINAL SCALE IS IN MILLIMETERS 0 20 40 60 80

DGN FILE = T:\13103\MS\pse\SAS Struc\CCO\SAS CC044\04-0120f1_02 8R02.dgn
USERNAME = tlorico

CU 04251 | EA 0120F1

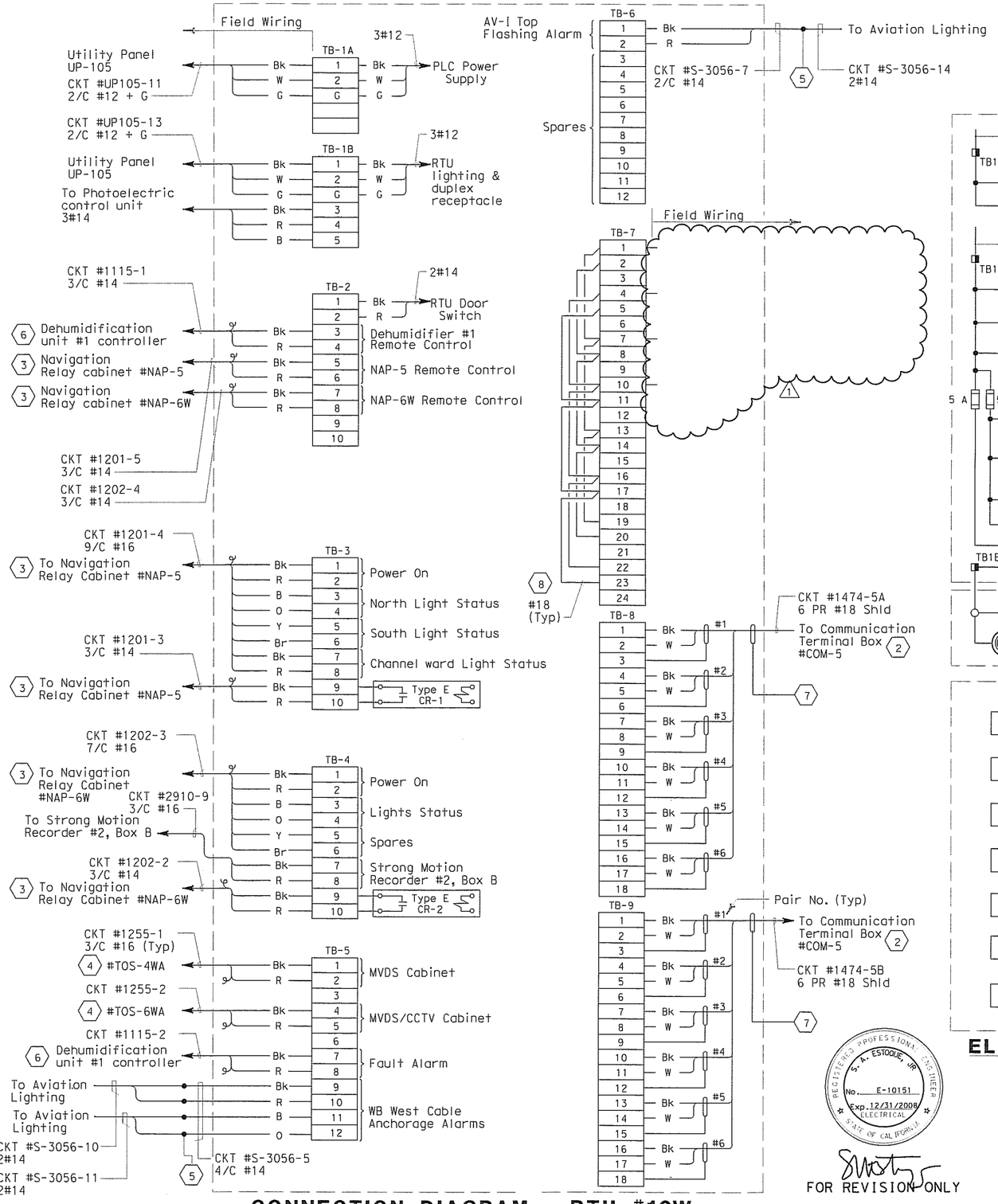

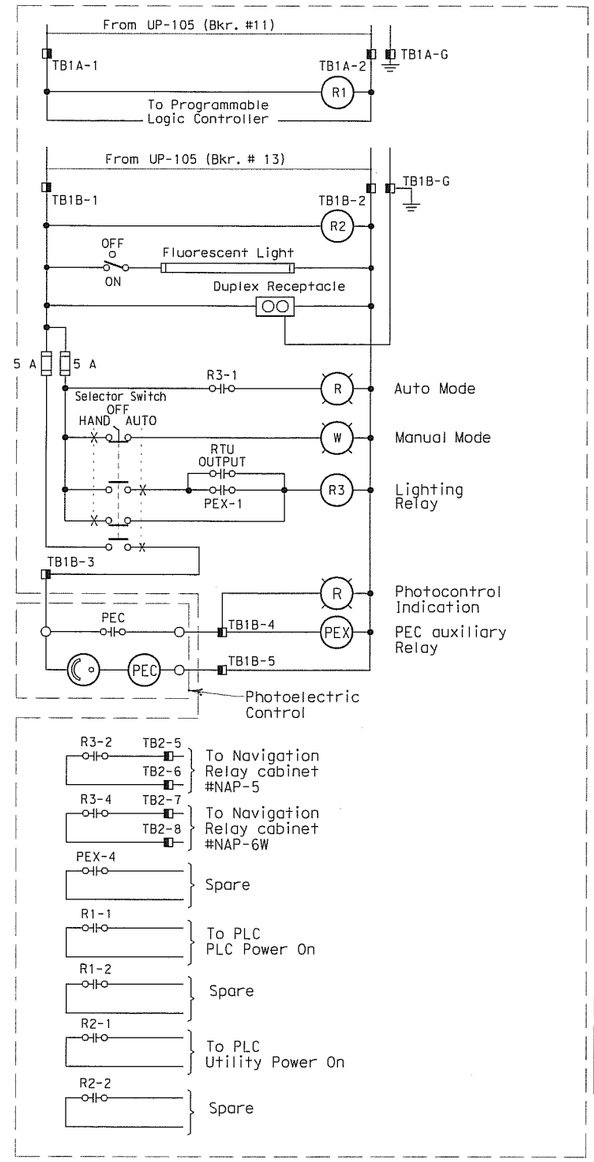

CONNECTION DIAGRAM - RTU #10W

ELEMENTARY DIAGRAM - RTU #10W

(Navigation Lighting System)

FOR REVISION ONLY

SHEET NOTES:

1. Deleted.
2. For connection diagram to scada system, see sheet E-324.
3. For navigation system connection diagrams, see sheet E-303.
4. Connections to panel door switch. For remote alarm status to RTU.
5. Conductors spliced inside junction box PB-2A located inside the girder.
6. For connection diagram to dehumidification controller, see sheet E-79.
7. Field to tape cable overall shield wire.
8. The Contractor shall install resistors, approximately equal to the impedance (Zo) of the twised pairs, at the extreme ends of the multidrop network.

NOTES:

1. All spare conductors shall be coiled and taped at conductor ends unless terminated.
2. Terminate cable shields to low level ground bus.
3. References:
   - For UP-105 panel schedule, see sheet E-60.
   - For navigation system elementary diagram, see sheet E-298.
   - For RTU #10W panel layout, see sheet E-320.
   - For circuit and conduit/cable tray schedules, see sheets starting at E-401.
   - For strong motion detection system cable block diagrams, see sheet E-383.

DIST	COUNTY	ROUTE	KILOMETER POST TOTAL PROJECT	SHEET No.	TOTAL SHEETS
04	SF	80	13.2/13.9	311 R1	1204

Jens Erlingsson 12/19/02
REGISTERED ELECTRICAL ENGINEER DATE

12-6-04
PLANS APPROVAL DATE

JENS ERLINGSSON No. 8249 Exp. 9/30/06 ELECTRICAL — REGISTERED PROFESSIONAL ENGINEER — STATE OF CALIFORNIA

PB POWER, Inc.
A Parsons Brinckerhoff Company
303 Second St., Suite 700N
San Francisco, CA 94107-1317

The State of California or its officers or agents shall not be responsible for the accuracy or completeness of electronic copies of this plan sheet.

Caltrans now has a web site! To get to the web site, go to http://www.dot.ca.gov

REQUEST FOR INFORMATION NOT ADDRESSED IN THIS CCO REMAIN IN FORCE

MARK	DATE	DESCRIPTIONS	BY	CH'D	CCO#
		REVISIONS			
1	03/04/08	BARRIER MODIFICATIONS	JS BM	RG SE	44

CONTRACT CHANGE ORDER NO._____
SHEET_____ OF _____

DETAILS
SCADA REMOTE TERMINAL UNIT SYSTEM
RTU #10W ELEMENTARY AND CONNECTION DIAGRAM

NO SCALE

E-330

REVISED BY	DATE REVISED
EDC	10/01
JL	12/01
CALCULATED/DESIGNED BY	CHECKED BY
BEHZAD GOLEMOHAMMADI	

STATE OF CALIFORNIA - DEPARTMENT OF TRANSPORTATION — Caltrans — DESIGN OVERSIGHT

THIS PLAN IS ACCURATE FOR ELECTRICAL WORK ONLY.

FOR REDUCED PLANS ORIGINAL SCALE IS IN MILLIMETERS 0 20 40 60 80

DGN FILE = T:\13103\MS\pse\SAS Struc\CCO\SAS CCO44\04-0120f1_03 1R01.dgn
USERNAME = florico

CU 04251 EA 0120F1

LAST REVISION 00-00-00 DATE PLOTTED = 5/22/2008 TIME PLOTTED = 10:55:51 AM

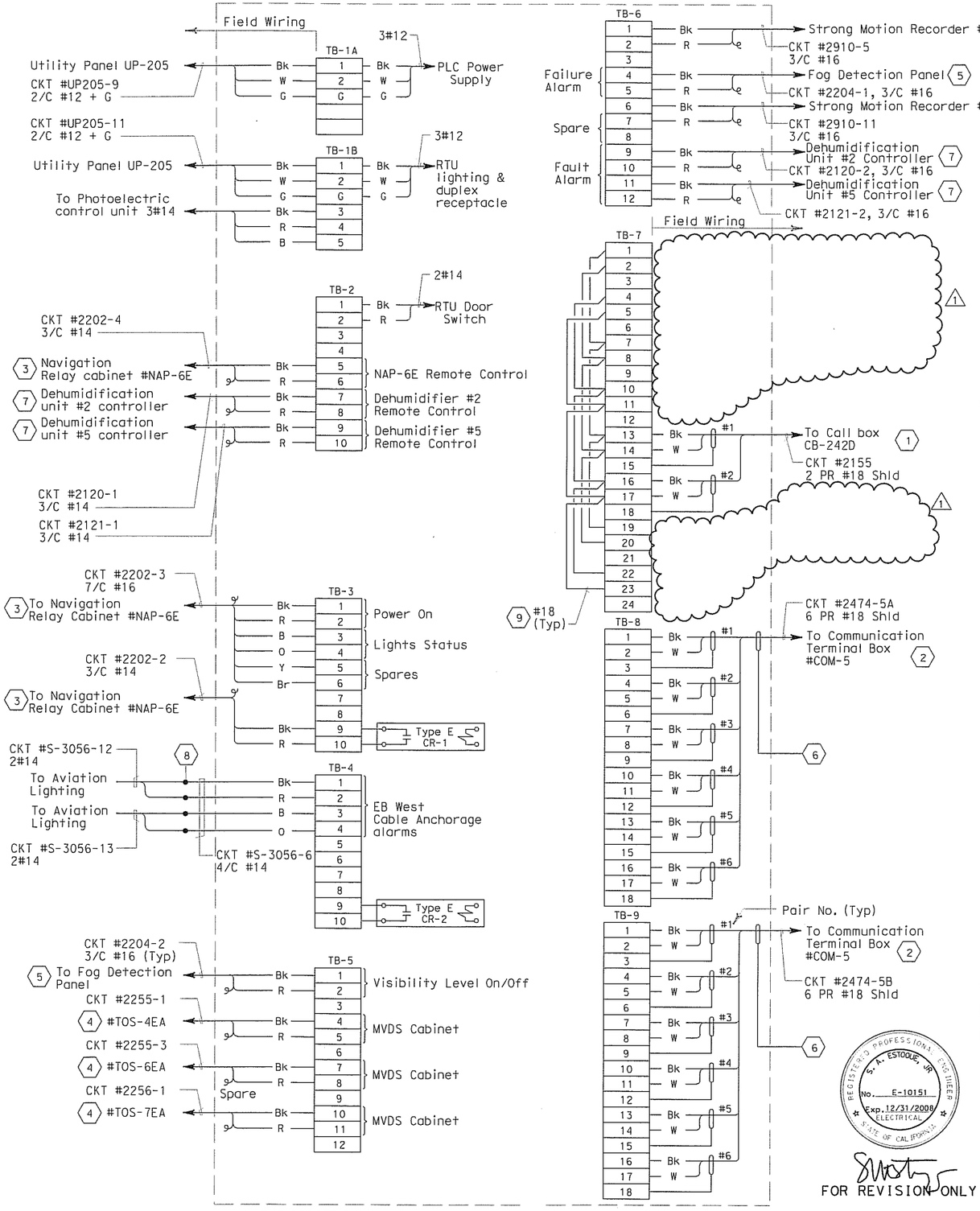

CONNECTION DIAGRAM - RTU #10E

ELEMENTARY DIAGRAM - RTU #10E

(Navigation Lighting System)

DIST	COUNTY	ROUTE	KILOMETER POST TOTAL PROJECT	SHEET NO	TOTAL SHEETS
04	SF	80	13.2/13.9	312 R1	1204

REGISTERED ELECTRICAL ENGINEER — 12/19/02 DATE

JENS ERLINGSSON No. 8249 Exp. 9/30/06 ELECTRICAL — REGISTERED PROFESSIONAL ENGINEER — STATE OF CALIFORNIA

12-6-04
PLANS APPROVAL DATE

PB POWER, Inc.
A Parsons Brinckerhoff Company
303 Second St., Suite 700N
San Francisco, CA 94107-1317

The State of California or its officers or agents shall not be responsible for the accuracy or completeness of electronic copies of this plan sheet.

Caltrans now has a web site! To get to the web site, go to http://www.dot.ca.gov

SHEET NOTES:

1. For connection diagram to call boxes, see sheet E-399.
2. For connection diagram to scada system, see sheet E-325.
3. For connection diagram to navigation system, see sheet E-303.
4. Connections to panel door switch. For remote alarm status to RTU.
5. For connection diagram to fog detection panel, see sheet E-300.
6. Field to tape cable overall shield wire.
7. For connection diagram to dehumidification controllers, see sheet E-79.
8. Conductors spliced inside junction box PB-2A located inside the girder.
9. The Contractor shall install resistors, approximately equal to the impedance (Zo) of the twised pairs, at the extreme ends of the multidrop network.

NOTES:

1. All spare conductors shall be coiled and taped at conductor ends unless terminated.
2. Terminate cable shields to low level ground bus.
3. References:
   - For UP-205 panel schedule, see sheet E-151.
   - For navigation system elementary diagram, see sheet E-299.
   - For RTU #10E panel layout, see sheet E-320.
   - For circuit and conduit/cable tray schedules, see sheets starting at E-401.
   - For strong motion detection system cable block diagrams, see sheets E-383 and E-384.

REQUEST FOR INFORMATION NOT ADDRESSED IN THIS CCO REMAIN IN FORCE

MARK	DATE	DESCRIPTIONS	BY	CH'D	CCO#
		REVISIONS			
1	03/04/08	BARRIER MODIFICATIONS	JS BM RG SE		44

CONTRACT CHANGE ORDER NO._____
SHEET_____ OF _____

DETAILS
SCADA REMOTE TERMINAL UNIT SYSTEM
RTU #10E ELEMENTARY AND CONNECTION DIAGRAM

NO SCALE

E-331

DESIGN OVERSIGHT	CALCULATED/ DESIGNED BY	CHECKED BY	EDC	DATE 10/01	REVISED BY	DATE REVISED
STATE OF CALIFORNIA - DEPARTMENT OF TRANSPORTATION	BEHZAD GOLEMOHAMMADI		JL	12/01		

S. A. ESTOQUE, JR. REGISTERED PROFESSIONAL ENGINEER No. E-10151 Exp. 12/31/2008 ELECTRICAL STATE OF CALIFORNIA

THIS PLAN IS ACCURATE FOR ELECTRICAL WORK ONLY.

FOR REDUCED PLANS ORIGINAL SCALE IS IN MILLIMETERS 0 20 40 60 80

DGN FILE = T:\13103\MS\pse\SAS Struc\CCO\SAS CC044\04-0120F1_03 2R01.dgn
USERNAME = florico

CU 04251 EA 0120F1

LAST REVISION 00-00-00 DATE PLOTTED = 5/22/2008 TIME PLOTTED = 10:56:15 AM

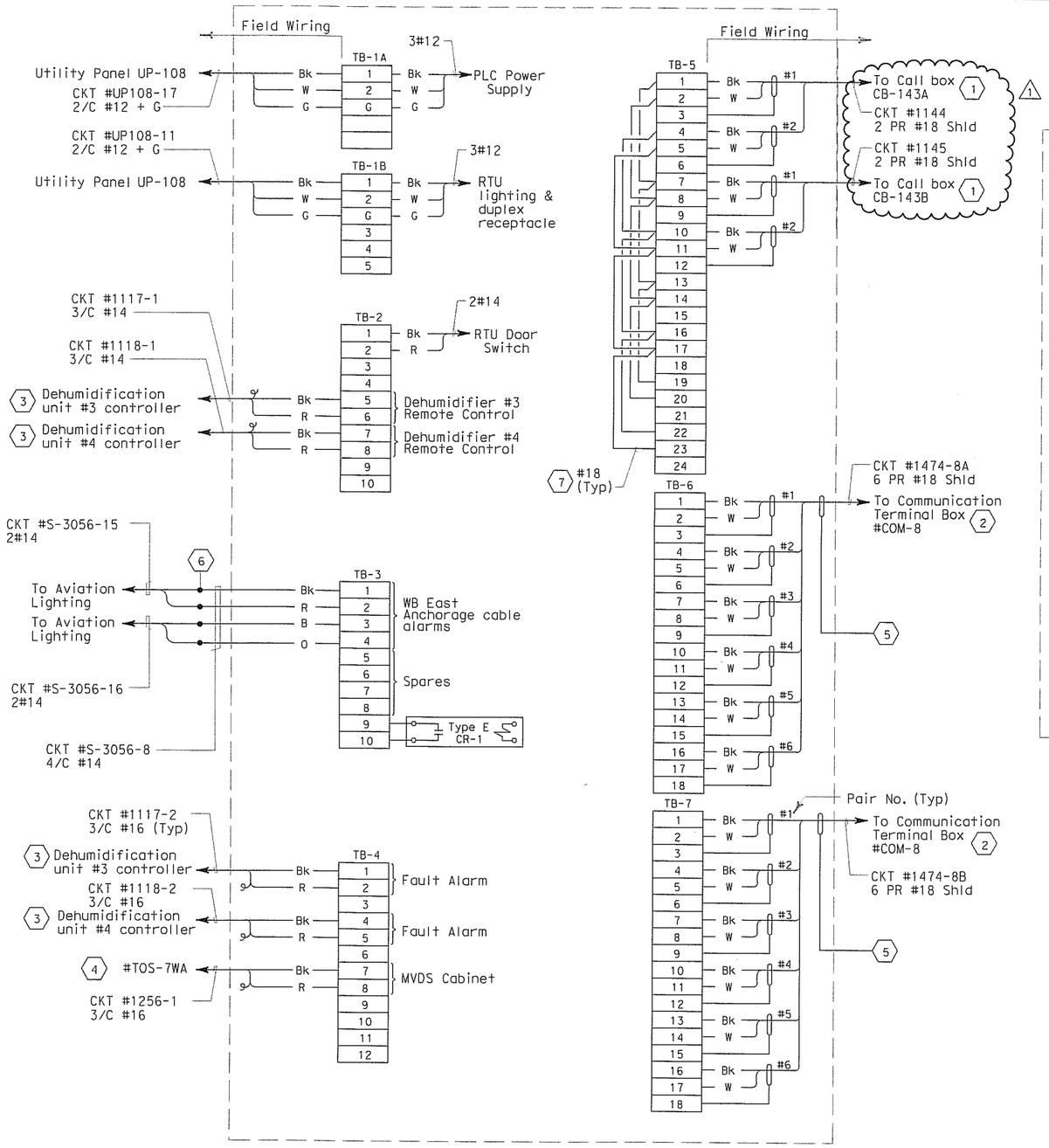

CONNECTION DIAGRAM - RTU #11W

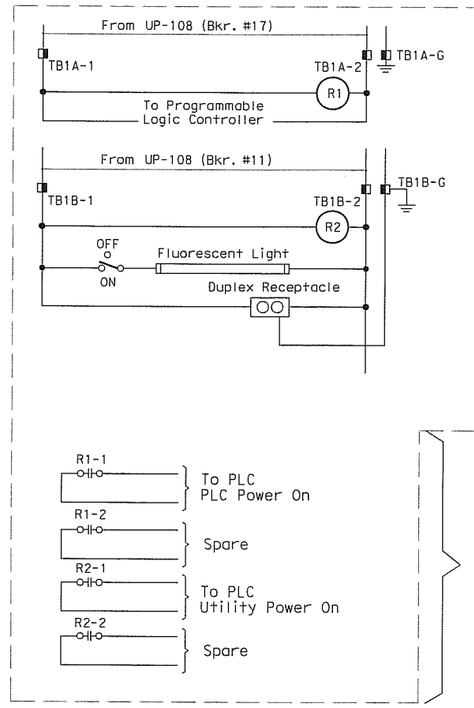

ELEMENTARY DIAGRAM - RTU #11W

SHEET NOTES:

1. For connection diagram to call boxes, see sheet E-398.
2. For connection diagram to scada system, see Table A, sheet E-325.
3. For connection diagram to dehumification controllers, see sheets E-79.
4. Connections to panel door switch. For remote alarm status to RTU.
5. Field to tape cable overall shield wire.
6. Conductors spliced inside junction box PB-2A located inside the girder.
7. The Contractor shall install resistors, approximately equal to the impedance (Zo) of the twised pairs, at the extreme ends of the multidrop network.

NOTES:

1. All spare conductors shall be coiled and taped at conductor ends unless terminated.
2. Terminate cable shields to low level ground bus.
3. References:
   - For UP-108 panel schedule, see sheet E-63.
   - For RTU #11W panel layout, see sheet E-320.
   - For circuit and conduit/cable tray schedules, see sheets starting at E-401.

DIST	COUNTY	ROUTE	KILOMETER POST TOTAL PROJECT	SHEET No	TOTAL SHEETS
04	SF	80	13.2/13.9	313 R1	1204

Jens Erlingsson 12/19/02
REGISTERED ELECTRICAL ENGINEER DATE

REGISTERED PROFESSIONAL ENGINEER — JENS ERLINGSSON No. 8249 Exp. 9/30/06 ELECTRICAL — STATE OF CALIFORNIA

12-6-04
PLANS APPROVAL DATE

PB POWER, Inc.
A Parsons Brinckerhoff Company
303 Second St., Suite 700N
San Francisco, CA 94107-1317

The State of California or its officers or agents shall not be responsible for the accuracy or completeness of electronic copies of this plan sheet.

Caltrans now has a web site! To get to the web site, go to http://www.dot.ca.gov

REGISTERED PROFESSIONAL ENGINEER — S. A. ESTOQUE, JR. No. E-10151 Exp. 12/31/2008 ELECTRICAL — STATE OF CALIFORNIA

FOR REVISION ONLY

REQUEST FOR INFORMATION NOT ADDRESSED IN THIS CCO REMAIN IN FORCE					
1	03/04/08	BARRIER MODIFICATIONS	JS BM	RG SE	44
MARK	DATE	DESCRIPTIONS	BY	CH'D	CCO#
REVISIONS					

CONTRACT CHANGE ORDER NO._____
SHEET_____ OF_____

DETAILS
SCADA REMOTE TERMINAL UNIT SYSTEM
RTU #11W ELEMENTARY AND CONNECTION DIAGRAM
NO SCALE

E-332

DATE	REVISED BY	DATE REVISED
10/01	EDC	JL 12/01

CALCULATED/DESIGNED BY: BEHZAD GOLEMOHAMMADI
CHECKED BY

DESIGN OVERSIGHT

STATE OF CALIFORNIA - DEPARTMENT OF TRANSPORTATION
Caltrans

LAST REVISION 00-00-00
DATE PLOTTED => 5/22/2008
TIME PLOTTED => 10:56:40 AM

FOR REDUCED PLANS ORIGINAL SCALE IS IN MILLIMETERS 0 20 40 60 80

DGN FILE = T:\13103\MS\pse\SAS Struc\CCO\SAS CCO44\04-0120f1_03_3R01.dgn
USERNAME = florico

CU 04251 EA 0120F1

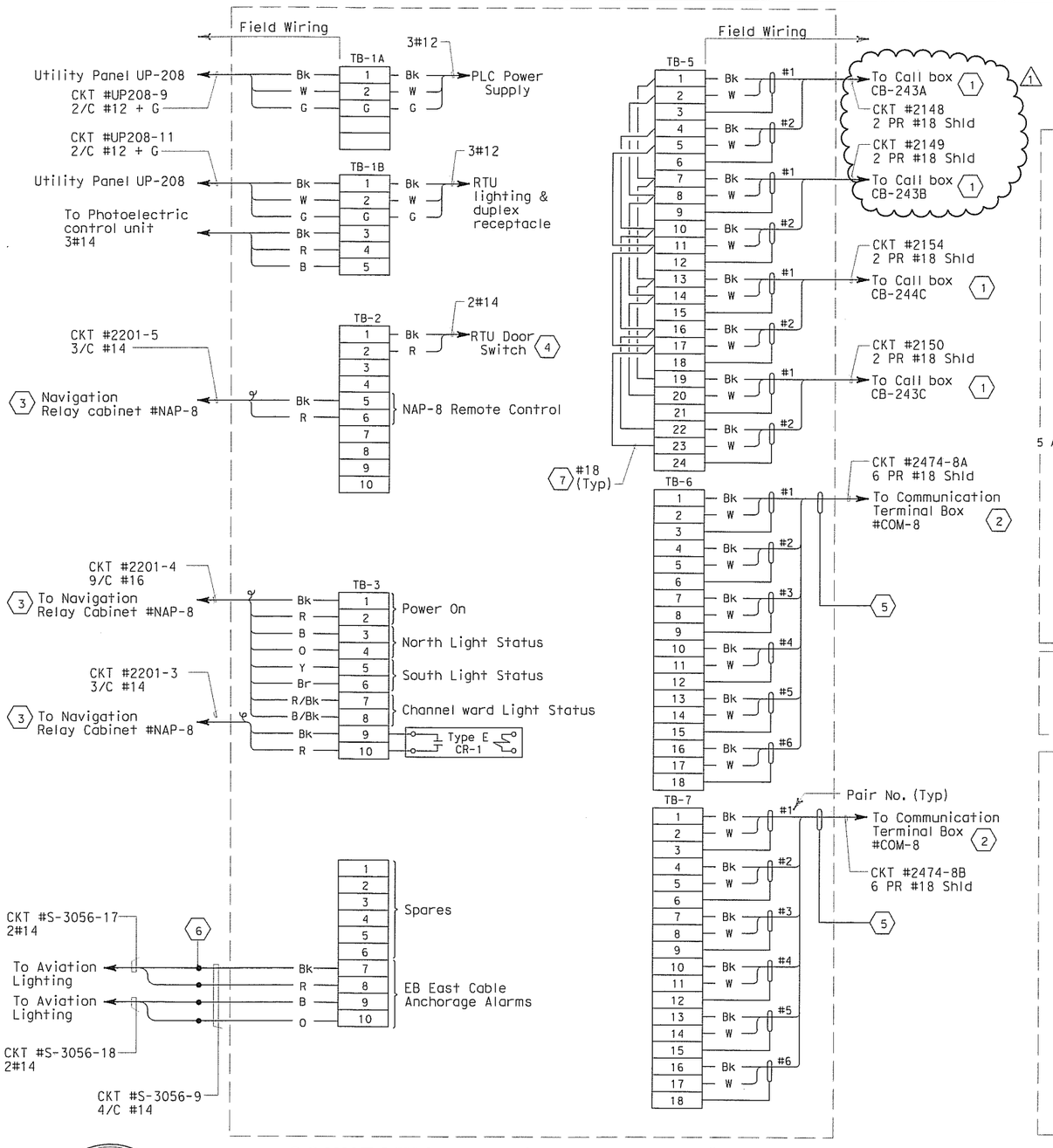

CONNECTION DIAGRAM - RTU #11E

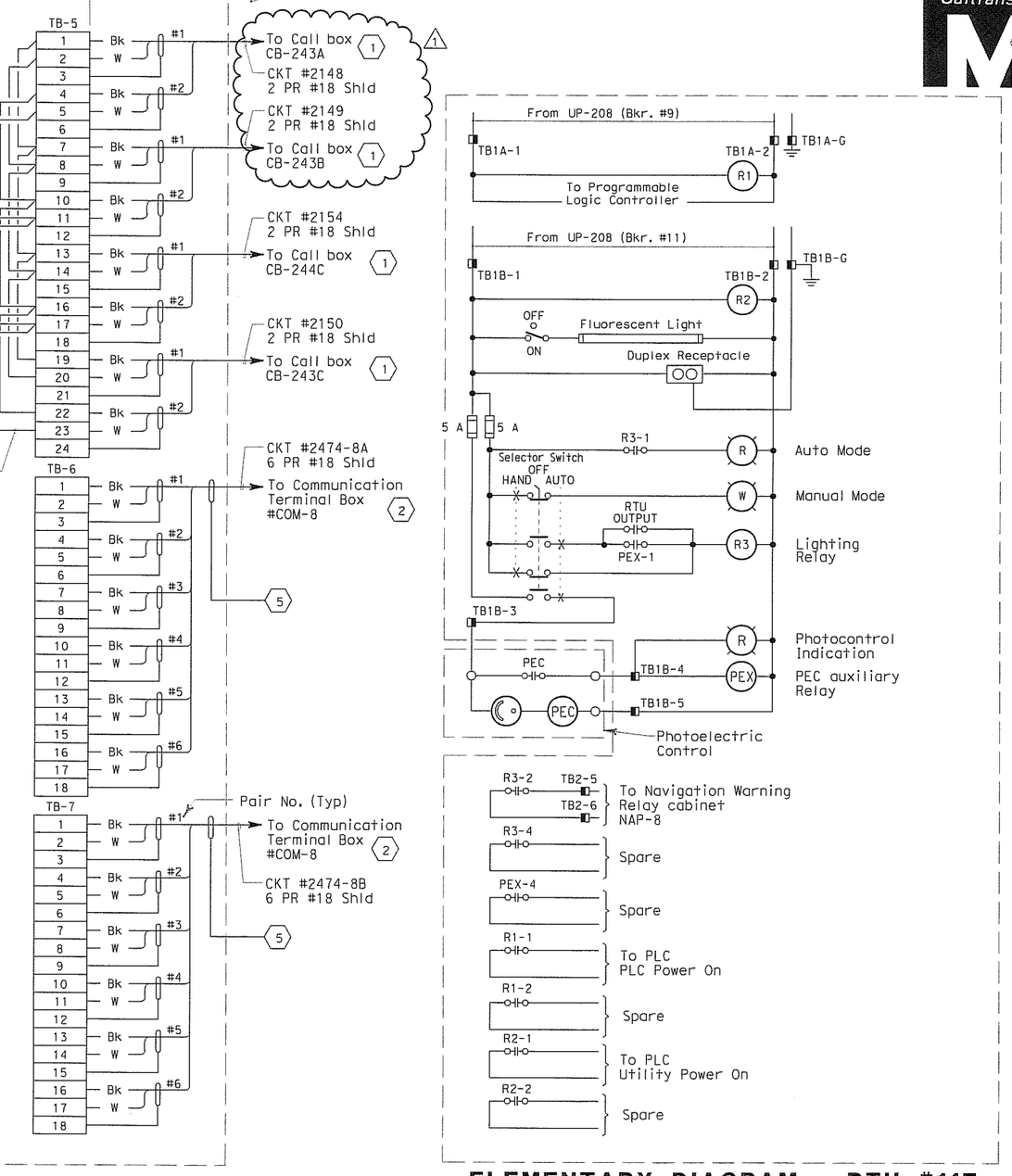

ELEMENTARY DIAGRAM - RTU #11E

(Navigation Lighting System)

DIST	COUNTY	ROUTE	KILOMETER POST TOTAL PROJECT	SHEET No.	TOTAL SHEETS
04	SF	80	13.2/13.9	314 R1	1204

Jens Erlingsson 12/19/02
REGISTERED ELECTRICAL ENGINEER DATE

12-6-04
PLANS APPROVAL DATE

REGISTERED PROFESSIONAL ENGINEER — JENS ERLINGSSON No. 8249 Exp. 9/30/06 ELECTRICAL — STATE OF CALIFORNIA

PB POWER, Inc.
A Parsons Brinckerhoff Company
303 Second St., Suite 700N
San Francisco, CA 94107-1317

The State of California or its officers or agents shall not be responsible for the accuracy or completeness of electronic copies of this plan sheet.

Caltrans now has a web site! To get to the web site, go to http://www.dot.ca.gov

SHEET NOTES:

(1) For connection diagram to call boxes, see sheet E-400.

(2) For connection diagram to scada system, see Table A, sheet E-325.

(3) For connection diagram to navigation system, see sheet E-303.

(4) Connections to panel door switch. For remote alarm status to RTU.

(5) Field to tape cable overall shield wire.

(6) Conductors spliced inside junction box PB-2A located inside the girder.

(7) The Contractor shall install resistors, approximately equal to the impedance (Zo) of the twised pairs, at the extreme ends of the multidrop network.

NOTES:

1. All spare conductors shall be coiled and taped at conductor ends unless terminated.
2. Terminate cable shields to low level ground bus.
3. References:
   - For Up-208 panel schedule, see sheet E-154.
   - For navigation system elementary diagram, see sheet E-298.
   - For RTU #11E panel layout, see sheet E-320.
   - For circuit and conduit/cable tray schedules, see sheets starting at E-401.

REGISTERED PROFESSIONAL ENGINEER — S. A. ESTODUE, JR. No. E-10151 Exp. 12/31/2008 ELECTRICAL — STATE OF CALIFORNIA

FOR REVISION ONLY

REQUEST FOR INFORMATION NOT ADDRESSED IN THIS CCO REMAIN IN FORCE						
MARK	DATE	REVISIONS DESCRIPTIONS	BY	CH'D	CCO#	
1	03/04/08	BARRIER MODIFICATIONS	JS BM	RG SE	44	

CONTRACT CHANGE ORDER NO._____
SHEET_____ OF _____

DETAILS
SCADA REMOTE TERMINAL UNIT SYSTEM
RTU #11E ELEMENTARY AND CONNECTION DIAGRAM

NO SCALE

E-333

DATE	REVISED BY
10/01	JL

DESIGN OVERSIGHT: BEHZAD GOLEMOHAMMADI
CALCULATED/DESIGNED BY: EDC
CHECKED BY:

STATE OF CALIFORNIA - DEPARTMENT OF TRANSPORTATION
Caltrans

LAST REVISION 00-00-00 DATE PLOTTED = 5/22/2006 TIME PLOTTED = 10:56:59 AM

FOR REDUCED PLANS ORIGINAL SCALE IS IN MILLIMETERS 0 20 40 60 80

DGN FILE = T:\13103\MS\pse\SAS Struc\CCO\SAS CC044\04-0120f1_034R01.dgn
USERNAME = florico

CU 04251 EA 0120F1

DIST	COUNTY	ROUTE	KILOMETER POST TOTAL PROJECT	SHEET No	TOTAL SHEETS
04	SF	80	13.2/13.9	351 R2	1204

Jens Erlingsson 12/19/02
REGISTERED ELECTRICAL ENGINEER DATE

REGISTERED PROFESSIONAL ENGINEER — JENS ERLINGSSON No. 8249 Exp. 9/30/06 ELECTRICAL — STATE OF CALIFORNIA

12-6-04
PLANS APPROVAL DATE

PB POWER, Inc.
A Parsons Brinckerhoff Company
303 Second St., Suite 700N
San Francisco, CA 94107-1317

The State of California or its officers or agents shall not be responsible for the accuracy or completeness of electronic copies of this plan sheet.

Caltrans now has a web site! To get to the web site, go to http://www.dot.ca.gov

CALCULATED/ DESIGNED BY	KG	DATE 11/01	REVISED BY	DATE REVISED
CHECKED BY	EDC	11/01		

DESIGN OVERSIGHT
BEHZAD GOLEMOHAMMADI

STATE OF CALIFORNIA - DEPARTMENT OF TRANSPORTATION
Caltrans

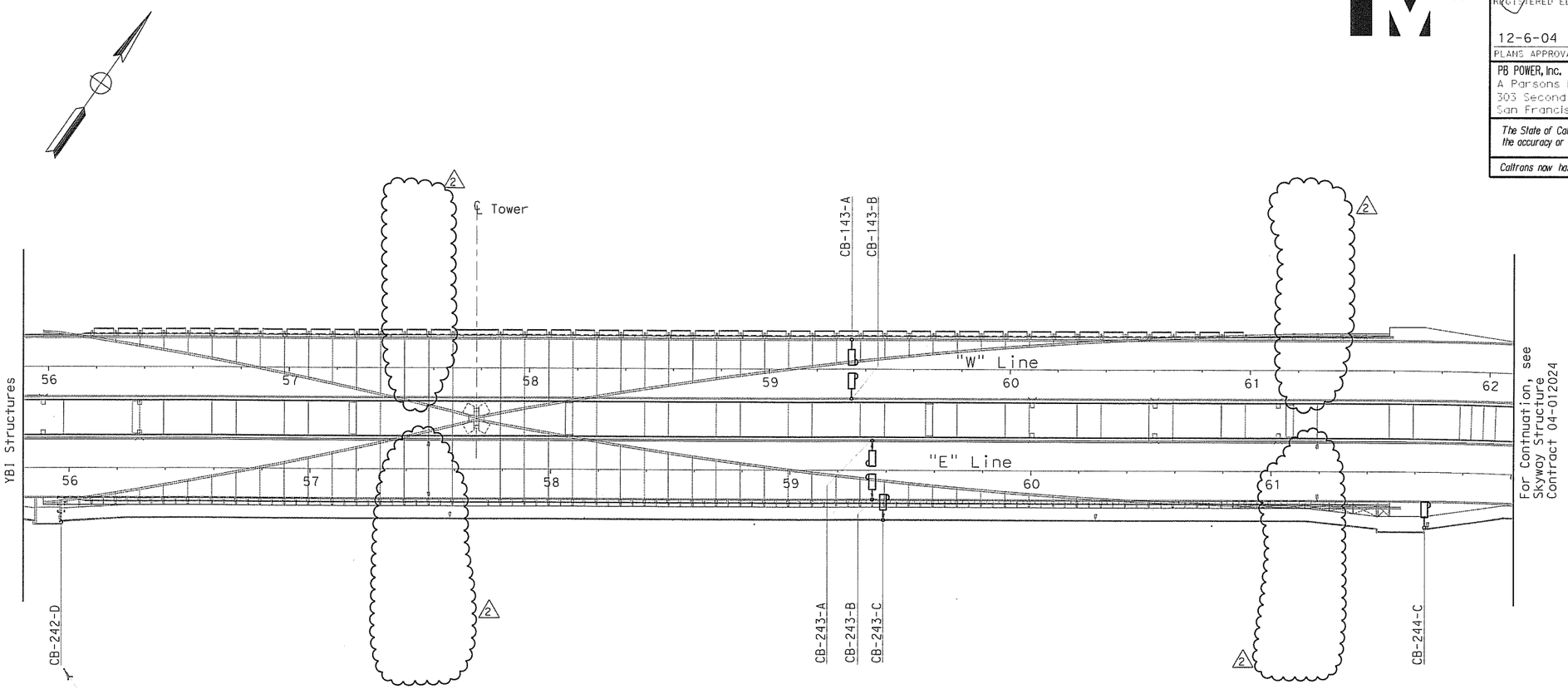

Not deleted from Contract, Installed by others.

PLAN

NOTES:

1. References:
   - For call box conduit routing see sheets E-46 thru E-51 (WB), and sheets E-135 thru E-140 (EB).
   - For call box schedule, see sheet E-397.
   - For call box wiring diagrams, see sheets E-398 (WB), and sheets E-399 and E-400 (EB).
   - Call box are State-furnished and Contractor installed.

REGISTERED PROFESSIONAL ENGINEER — S. A. ESTOQUE, JR. No. E-10151 Exp. 12/31/2008 ELECTRICAL — STATE OF CALIFORNIA

FOR REVISION ONLY

REQUEST FOR INFORMATION NOT ADDRESSED IN THIS CCO REMAIN IN FORCE					
2	03/04/08	BARRIER MODIFICATIONS	JS BM	RG SE	44
1	02/19/08	ELECTRICAL MODIFICATIONS	MP EL	RR	42
MARK	DATE	DESCRIPTIONS	BY	CH'D	CCO#
REVISIONS					

CONTRACT CHANGE ORDER NO._____
SHEET_____ OF _____

CALL BOX SYSTEM
SAS SUPERSTRUCTURE LOCATIONS
SCALE 1:1000

E-396

LAST REVISION 00-00-00 | DATE PLOTTED = 5/22/2008 | TIME PLOTTED = 10:57:17 AM

THIS PLAN ACCURATE FOR ELECTRICAL WORK ONLY.

FOR REDUCED PLANS ORIGINAL SCALE IS IN MILLIMETERS 0 20 40 60 80

DGN FILE = T:\13103\MS\pse\SAS Struc\CCO\SAS CCO44\04-0120f1_035IR02.dgn
USERNAME = florico

CU 04251 | EA 0120F1

CALL BOX SCHEDULE - WESTBOUND

Call Box Number	Station Number	Mounting Type	Location: Roadway Location	RTU Connection	Remarks
CB-143A	59 + 33.80	Steel Barrier	Westbound North	RTU #11W	
CB-143B	59 + 33.80	Steel Barrier	Westbound South	RTU #11W	

2

CALL BOX SCHEDULE - EASTBOUND

Call Box Number	Station Number	Mounting Type	Location: Roadway Side	RTU Connection	Remarks
					2
CB-242D	55 + 96	Bike Path Railing	Bike Path	RTU #10E	Installed By Others
CB-243A	59 + 35	Steel Barrier	Eastbound North	RTU #11E	
CB-243B	59 + 35	Steel Barrier	Eastbound South	RTU #11E	
CB-243C	59 + 39	Bike Path Railing	Bike Path	RTU #11E	
					2
CB-244C	61 + 64	Bike Path Railing	Bike Path	RTU #11E	At Pier E2E

Caltrans Metric

DIST	COUNTY	ROUTE	KILOMETER POST TOTAL PROJECT	SHEET NO	TOTAL SHEETS
04	SF	80	13.2/13.9	352 R2	1204

JENS ERLINGSSON 12/19/02
REGISTERED ELECTRICAL ENGINEER DATE

12-6-04
PLANS APPROVAL DATE

REGISTERED PROFESSIONAL ENGINEER — JENS ERLINGSSON No. 8249 Exp. 9/30/08 ELECTRICAL — STATE OF CALIFORNIA

PB POWER, Inc.
A Parsons Brinckerhoff Company
303 Second St., Suite 700N
San Francisco, CA 94107-1317

The State of California or its officers or agents shall not be responsible for the accuracy or completeness of electronic copies of this plan sheet.

Caltrans now has a web site! To get to the web site, go to http://www.dot.ca.gov

NOTES:

1. Call boxes will be State-furnished.
2. References:
   - For RTU #10W, #11W, #10E #11E panel layout, see sheet E-320.

REGISTERED PROFESSIONAL ENGINEER — S. A. ESTOQUE, JR. No. E-10151 Exp. 12/31/2008 ELECTRICAL — STATE OF CALIFORNIA

FOR REVISION ONLY

REQUEST FOR INFORMATION NOT ADDRESSED IN THIS CCO REMAIN IN FORCE					
MARK	DATE	REVISIONS DESCRIPTIONS	BY	CH'D	CCO#
2	03/04/08	BARRIER MODIFICATIONS	JS BM	RG SE	44
1	02/19/08	ELECTRICAL MODIFICATIONS	MP EL	RR	42

CONTRACT CHANGE ORDER NO._____
SHEET_____ OF_____

DETAILS
CALL BOX SYSTEM
CALL BOX SCHEDULES

NO SCALE

E-397

DATE	EJL	CALCULATED/ DESIGNED BY
9/01	EDC	BY
11/01		

REVISED BY
DATE REVISED

STATE OF CALIFORNIA - DEPARTMENT OF TRANSPORTATION
Caltrans

DESIGN OVERSIGHT
BEHZAD GOLEMOHAMMADI

THIS PLAN ACCURATE FOR ELECTRICAL WORK ONLY.

FOR REDUCED PLANS ORIGINAL SCALE IS IN MILLIMETERS 0 20 40 60 80

DGN FILE = T:\13103\MS\pse\SAS Struc\CCO\SAS CCO44\04-0120F1_0352R02.dgn
USERNAME = rllorico

CU 04251 EA 0120F1

LAST REVISION 00-00-00
DATE PLOTTED = 5/22/2008
TIME PLOTTED = 10:57:34 AM

DIST	COUNTY	ROUTE	KILOMETER POST TOTAL PROJECT	SHEET No	TOTAL SHEETS
04	SF	80	13.2/13.9	353 R1	1204

Jens Erlingsson 12/19/02
REGISTERED ELECTRICAL ENGINEER DATE

12-6-04
PLANS APPROVAL DATE

REGISTERED PROFESSIONAL ENGINEER — JENS ERLINGSSON No. 8249 Exp. 9/30/06 ELECTRICAL — STATE OF CALIFORNIA

PB POWER, Inc.
A Parsons Brinckerhoff Company
303 Second St., Suite 700N
San Francisco, CA 94107-1317

The State of California or its officers or agents shall not be responsible for the accuracy or completeness of electronic copies of this plan sheet.

Caltrans now has a web site! To get to the web site, go to http://www.dot.ca.gov

SHEET NOTES:

1. Conductors spliced inside PB-Ltg.
2. For continuation see RTU 11W connection diagram sheet E-332. 1
3. Data cable 1-2 pairs #18 shielded with overall shield. Coil and tape end of pair #2 inside Call Box.
4. The Contractor shall install resistors, approximately equal to the impedance (Zo) of the twised pairs, at the extreme ends of the multidrop network.

NOTE:

1. References:
   - For panel schedules, see sheets E-60 and E-63.
   - For circuit and conduit/cable tray schedules, see sheets starting at E-401.
   - For call Boxes schedule, see sheet E-397.

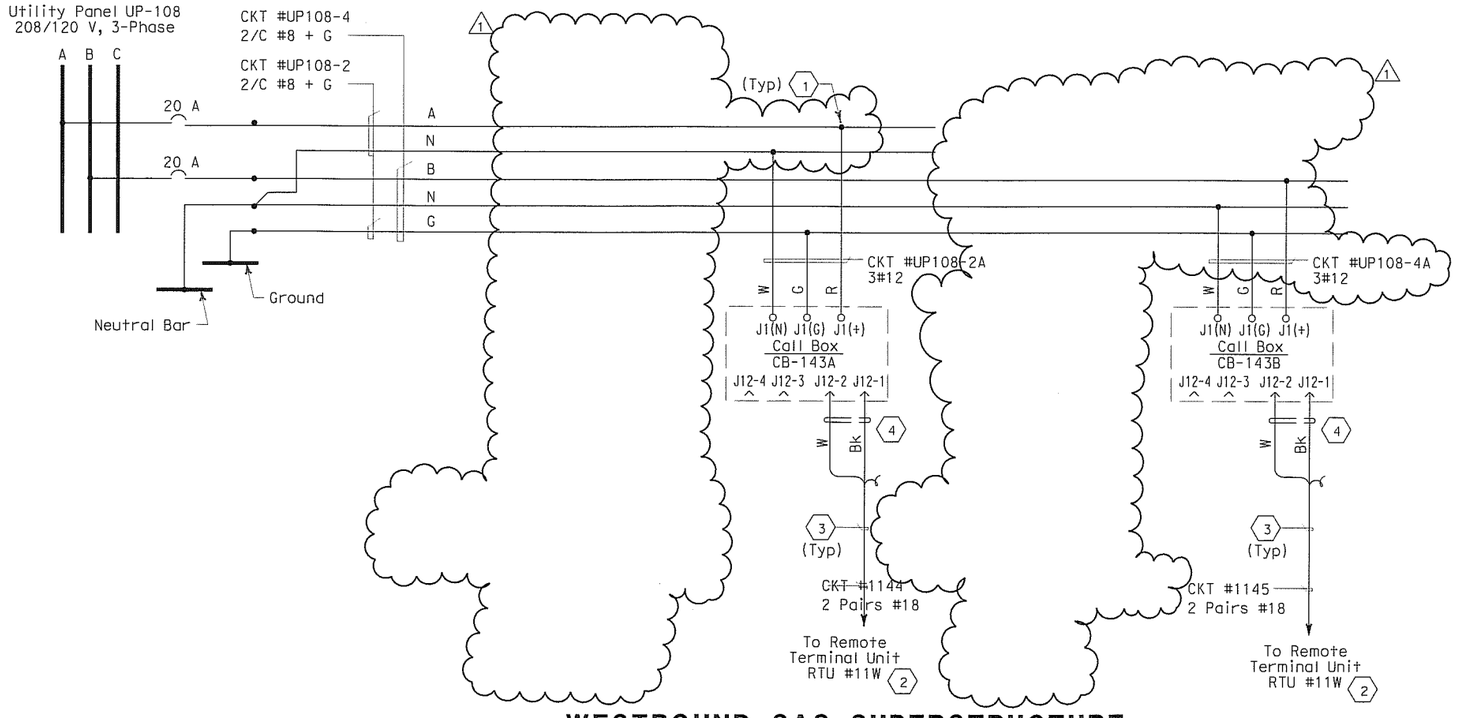

WESTBOUND SAS SUPERSTRUCTURE

REGISTERED PROFESSIONAL ENGINEER — S. A. ESTOQUE, JR No. E-10151 Exp. 12/31/2008 ELECTRICAL — STATE OF CALIFORNIA

FOR REVISION ONLY

REQUEST FOR INFORMATION NOT ADDRESSED IN THIS CCO REMAIN IN FORCE						
1	03/04/08	BARRIER MODIFICATIONS	JS BM	RG SE	44	
MARK	DATE	DESCRIPTIONS	BY	CH'D	CCO#	
REVISIONS						

CONTRACT CHANGE ORDER NO._____
SHEET_____ OF _____

DETAILS
CALL BOX SYSTEM
CALL BOX WIRING DIAGRAM
NO SCALE

E-398

THIS PLAN ACCURATE FOR ELECTRICAL WORK ONLY.

STATE OF CALIFORNIA - DEPARTMENT OF TRANSPORTATION
Caltrans
DESIGN OVERSIGHT
BEHZAD GOLEMOHAMMADI
CALCULATED/DESIGNED BY EJL
CHECKED BY EDC
DATE 09/01 11/01
REVISED BY DATE REVISED

LAST REVISION 00-00-00
DATE PLOTTED = 5/22/2008
TIME PLOTTED = 10:57:57 AM

FOR REDUCED PLANS ORIGINAL SCALE IS IN MILLIMETERS 0 20 40 60 80

DGN FILE = T:\13103\MS\pse\SAS Struc\CCO\SAS CCO44\04-0120f1_0353R01.dgn
USERNAME = rflorico

CU 04251 EA 0120F1

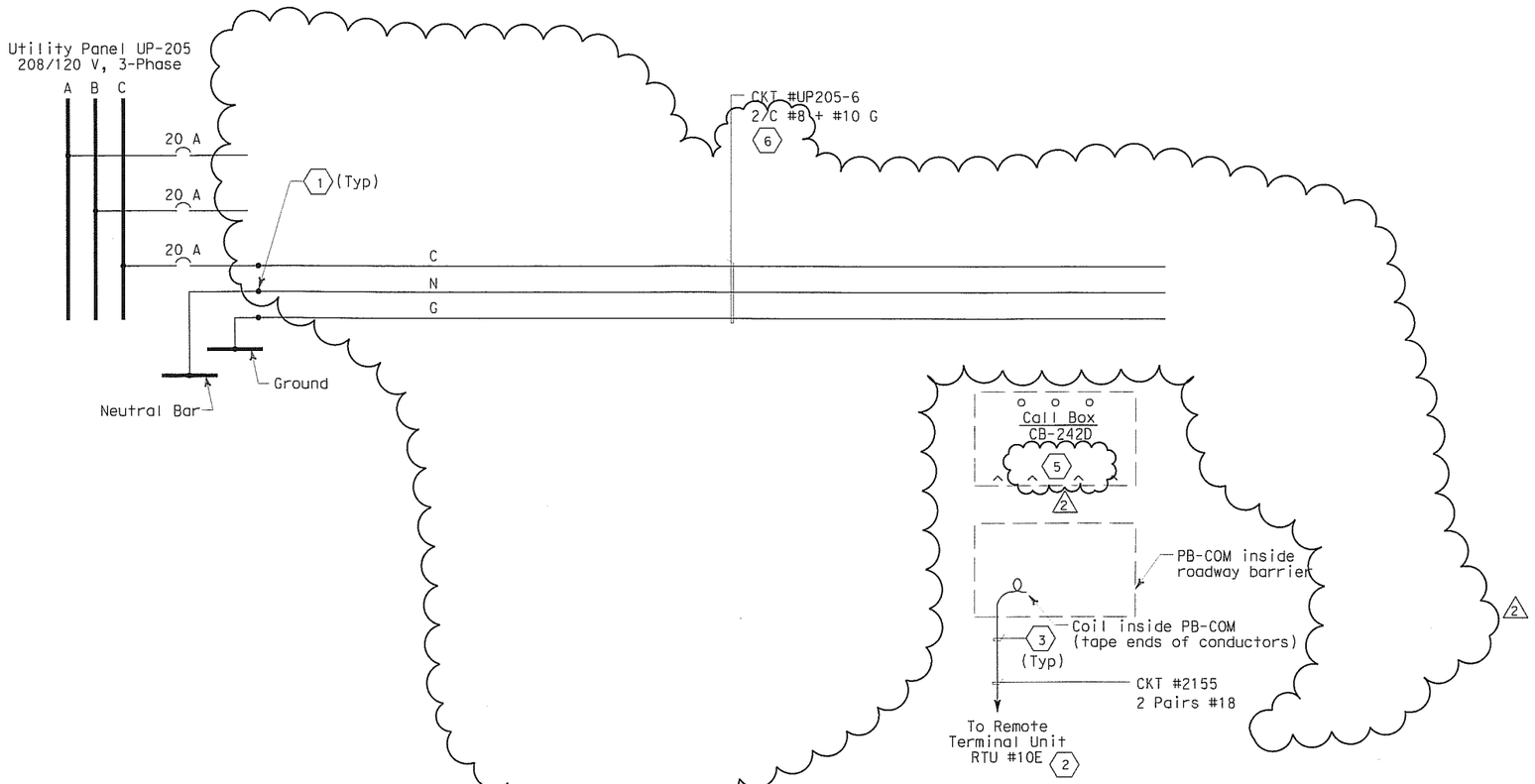

SHEET NOTES:

(1) Conductors spliced inside PB-Ltg.

(2) For continuation, see RTU #10E connection diagrams sheet E-331.

(3) Data cable 1-2 pairs #18 shielded with overall shield. Coil and tape end of pair #2 inside Call Box.

(2) (4) Deleted.

(5) Not deleted from contract, (2) state furnished and installed by others.

(2) (6) Cable shall be unterminated, coiled and taped at both ends until call box is installed.

NOTE:

1. References:
   - For panel schedules, see sheets E-151.
   - For circuit and conduit/cable tray schedules, see sheets starting at E-401.
   - For call boxes schedule, see sheet E-397.

DIST	COUNTY	ROUTE	KILOMETER POST TOTAL PROJECT	SHEET No	TOTAL SHEETS
04	SF	80	13.2/13.9	354 R2	1204

Jens Erlingsson 12/19/02
REGISTERED ELECTRICAL ENGINEER DATE

12-6-04
PLANS APPROVAL DATE

REGISTERED PROFESSIONAL ENGINEER — JENS ERLINGSSON No. 8249 Exp. 9/30/06 ELECTRICAL — STATE OF CALIFORNIA

PB POWER, Inc.
A Parsons Brinckerhoff Company
303 Second St. Suite 700N
San Francisco, CA 94107-1317

The State of California or its officers or agents shall not be responsible for the accuracy or completeness of electronic copies of this plan sheet.

Caltrans now has a web site! To get to the web site, go to http://www.dot.ca.gov

REGISTERED PROFESSIONAL ENGINEER — S. A. ESTOQUE, JR. No. E-10151 Exp. 12/31/2008 ELECTRICAL — STATE OF CALIFORNIA

FOR REVISION ONLY

REQUEST FOR INFORMATION NOT ADDRESSED IN THIS CCO REMAIN IN FORCE					
MARK	DATE	DESCRIPTIONS	BY	CH'D	CCO#
		REVISIONS			
(2)	03/04/08	BARRIER MODIFICATIONS	JS BM	RG SE	44
(1)	02/19/08	ELECTRICAL MODIFICATIONS	MP EL	RR	42

CONTRACT CHANGE ORDER NO._____
SHEET_____ OF _____

EASTBOUND SAS SUPERSTRUCTURE

DETAILS
CALL BOX SYSTEM
CALL BOX WIRING DIAGRAM
NO SCALE

E-399

THIS PLAN ACCURATE FOR ELECTRICAL WORK ONLY.

FOR REDUCED PLANS ORIGINAL SCALE IS IN MILLIMETERS 0 20 40 60 80

DGN FILE = T:\13103\MS\pse\SAS Struc\CCO\SAS CCO44\04-0120F1_0354R02.dgn
USERNAME = rlorico

CU 04251 EA 0120F1

LAST REVISION 00-00-00 DATE PLOTTED = 5/22/2008 TIME PLOTTED = 10:56:20 AM

STATE OF CALIFORNIA - DEPARTMENT OF TRANSPORTATION Caltrans

DESIGN OVERSIGHT BEHZAD GOLEMOHAMMADI

CALCULATED/DESIGNED BY EJL 09/01 REVISED BY
CHECKED BY EDC 11/01 DATE REVISED

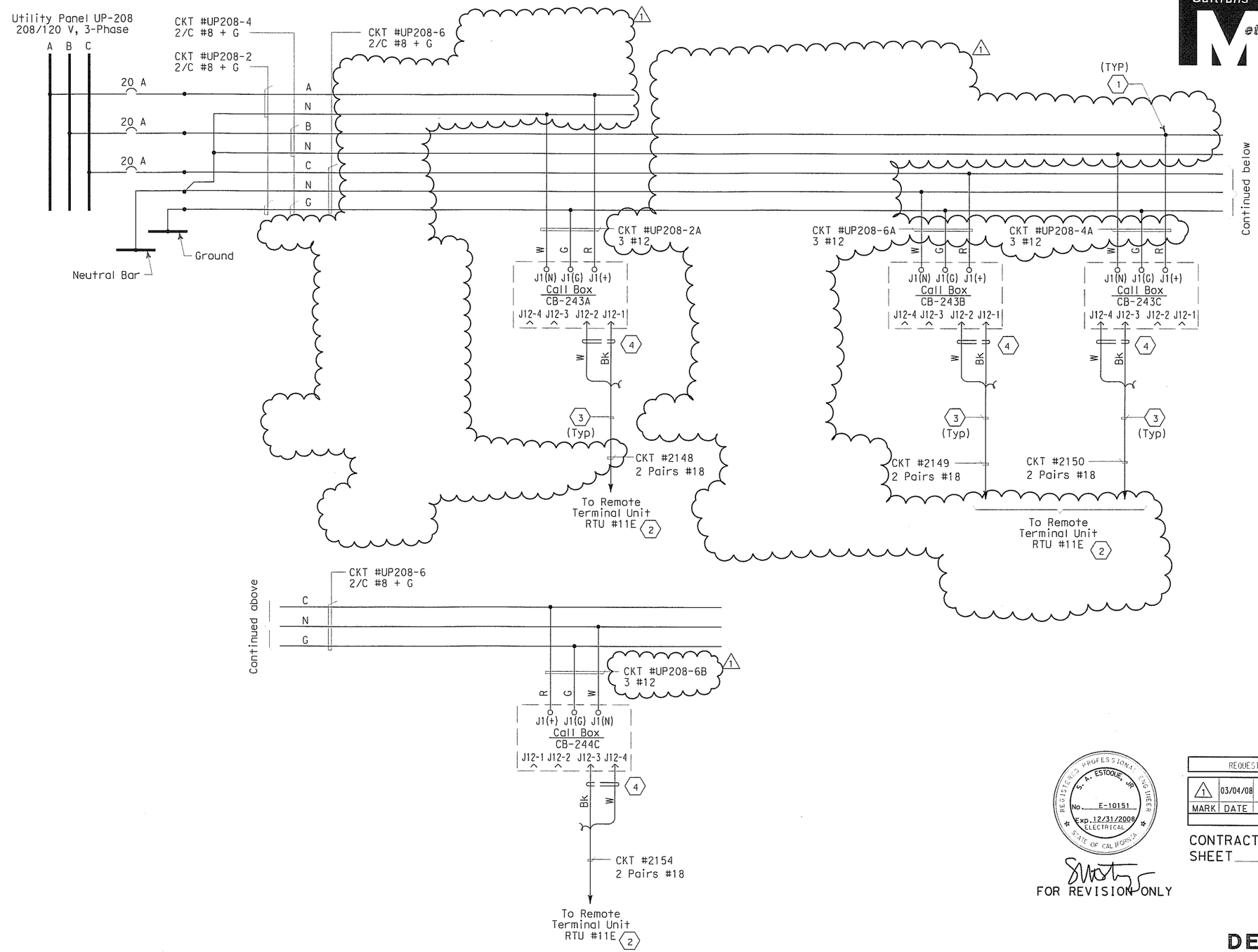

EASTBOUND SAS SUPERSTRUCTURE

DIST	COUNTY	ROUTE	KILOMETER POST TOTAL PROJECT	SHEET No	TOTAL SHEETS
04	SF	80	13.2/13.9	355 R1	1204

12/19/02
REGISTERED ELECTRICAL ENGINEER DATE

12-6-04
PLANS APPROVAL DATE

REGISTERED PROFESSIONAL ENGINEER — JENS ERLINGSSON No. 8249 Exp. 9/30/06 ELECTRICAL — STATE OF CALIFORNIA

PB POWER, Inc.
A Parsons Brinckerhoff Company
303 Second St., Suite 700N
San Francisco, CA 94107-1317

The State of California or its officers or agents shall not be responsible for the accuracy or completeness of electronic copies of this plan sheet.

Caltrans now has a web site! To get to the web site, go to http://www.dot.ca.gov

SHEET NOTES:

1. Conductors spliced inside PB-Ltg.
2. For continuation, see RTU #11E connection diagrams sheet E-333.
3. Data cable 1-2 pairs #18 shielded with overall shield. Coil and tape end of pair #2 inside Call Box.
4. The Contractor shall install resistors, approximately equal to the impedance (Zo) of the twised pairs, at the extreme ends of the multidrop network.

NOTE:

1. References:
   - For panel schedules, see sheets E-154.
   - For circuit and conduit/cable tray schedules, see sheets starting at E-401.
   - For call boxes schedule, see sheet E-397.

REGISTERED PROFESSIONAL ENGINEER — S. A. ESTOQUE, JR. No. E-10151 Exp. 12/31/2008 ELECTRICAL — STATE OF CALIFORNIA

FOR REVISION ONLY

REQUEST FOR INFORMATION NOT ADDRESSED IN THIS CCO REMAIN IN FORCE					
1	03/04/08	BARRIER MODIFICATIONS	JS BM	RG SE	44
MARK	DATE	DESCRIPTIONS	BY	CH'D	CCO#
REVISIONS					

CONTRACT CHANGE ORDER NO._____
SHEET_____ OF _____

DETAILS
CALL BOX SYSTEM
CALL BOX WIRING DIAGRAM
NO SCALE

E-400

DATE	REVISED BY	DATE REVISED
09/01	EJL	11/01 EDC

CALCULATED/DESIGNED BY
CHECKED BY

STATE OF CALIFORNIA - DEPARTMENT OF TRANSPORTATION
Caltrans
DESIGN OVERSIGHT
BEHZAD GOLEMOHAMMADI

THIS PLAN ACCURATE FOR ELECTRICAL WORK ONLY.

FOR REDUCED PLANS ORIGINAL SCALE IS IN MILLIMETERS 0 20 40 60 80

DGN FILE = T:\13103\MS\pse\SAS Struc\CCO\SAS CCO44\04-0120F1_355R01.dgn
USERNAME = rflorico

CU 04251 EA 0120F1

LAST REVISION 00-00-00 DATE PLOTTED = 5/22/2008 TIME PLOTTED = 10:56:38 AM

CONDUIT DATA

Conduit No	Reference	Size	Type	Total Fill (mm²)	Allowable Fill (mm²)	Included Cable No.	Conductor Type
1361	E-47	41	RGS conduit	212.85	534.55	Pull rope	Soft-Fiber Polyester
						A-3002-2	3 + 1 gnd #6,#8, 600 V, RHH/RHW insulation
1362	E-47	41	RGS conduit	212.85	534.55		
						Pull rope	Soft-Fiber Polyester
						A-3002-2	3 + 1 gnd #6,#8, 600 V, RHH/RHW insulation
1363	E-47	41	RGS conduit	212.85	534.55	Pull rope	Soft-Fiber Polyester
						A-3002-2	3 + 1 gnd #6,#8, 600 V, RHH/RHW insulation
1364	E-47	41	RGS conduit	0.00	534.55	Pull rope	Soft-Fiber Polyester
1365	E-47	41	RGS conduit	212.85	534.55	A-3003-2	3 + 1 gnd #6,#8, 600 V, RHH/RHW insulation
						Pull rope	Soft-Fiber Polyester
1366	E-47	41	RGS conduit	440.31	534.55	A-3003-2	3 + 1 gnd #6,#8, 600 V, RHH/RHW insulation
						UP106-1	1-2/C + gnd #8, 600 V, EPR insulation
						Pull rope	Soft-Fiber Polyester
1367	E-47	41	RGS conduit	440.31	534.55	Pull rope	Soft-Fiber Polyester
						A-3003-2	3 + 1 gnd #6,#8, 600 V, RHH/RHW insulation
						UP106-1	1-2/C + gnd #8, 600 V, EPR insulation
1368	E-47	41	RGS conduit	440.31	534.55	A-3003-2	3 + 1 gnd #6,#8, 600 V, RHH/RHW insulation
						Pull rope	Soft-Fiber Polyester
						UP106-1	1-2/C + gnd #8, 600 V, EPR insulation
1369	E-48	41	RGS conduit	440.31	534.55	A-3003-2	3 + 1 gnd #6,#8, 600 V, RHH/RHW insulation
						UP106-1	1-2/C + gnd #8, 600 V, EPR insulation
						Pull rope	Soft-Fiber Polyester
1370	E-48	41	RGS conduit	227.46	534.55	Pull rope	Soft-Fiber Polyester
						UP106-1	1-2/C + gnd #8, 600 V, EPR insulation
1371	E-48	41	RGS conduit	212.85	534.55	A-3004-2	3 + 1 gnd #6,#8, 600 V, RHH/RHW insulation
						Pull rope	Soft-Fiber Polyester
1372	E-48	41	RGS conduit	212.85	534.55	A-3004-2	3 + 1 gnd #6,#8, 600 V, RHH/RHW insulation
						Pull rope	Soft-Fiber Polyester
1373	E-48	41	RGS conduit	212.85	534.55	Pull rope	Soft-Fiber Polyester
						A-3004-2	3 + 1 gnd #6,#8, 600 V, RHH/RHW insulation
1374	E-48	41	RGS conduit	212.85	534.55	Pull rope	Soft-Fiber Polyester
						A-3004-2	3 + 1 gnd #6,#8, 600 V, RHH/RHW insulation
1375	E-48	41	RGS conduit	212.85	534.55	Pull rope	Soft-Fiber Polyester
						A-3004-2	3 + 1 gnd #6,#8, 600 V, RHH/RHW insulation
1376	E-48	41	RGS conduit	0.00	534.55	Pull rope	Soft-Fiber Polyester
1377	E-48	41	RGS conduit	212.85	534.55	A-3005-2	3 + 1 gnd #6,#8, 600 V, RHH/RHW insulation
						Pull rope	Soft-Fiber Polyester
1378	E-48	41	RGS conduit	212.85	534.55	Pull rope	Soft-Fiber Polyester
						A-3005-2	3 + 1 gnd #6,#8, 600 V, RHH/RHW insulation
1379	E-48	41	RGS conduit	212.85	534.55	Pull rope	Soft-Fiber Polyester
						A-3005-2	3 + 1 gnd #6,#8, 600 V, RHH/RHW insulation
1380	E-49	41	RGS conduit	212.85	534.55	Pull rope	Soft-Fiber Polyester
						A-3005-2	3 + 1 gnd #6,#8, 600 V, RHH/RHW insulation
1381	E-49	41	RGS conduit	212.85	534.55	Pull rope	Soft-Fiber Polyester
						A-3005-2	3 + 1 gnd #6,#8, 600 V, RHH/RHW insulation
1382	E-49	41	RGS conduit	227.46	534.55	Pull rope	Soft-Fiber Polyester
						UP108-2	1-2/C + gnd #8, 600 V, EPR insulation
1383	E-49	41	RGS conduit	212.85	534.55	A-3006-2	3 + 1 gnd #6,#8, 600 V, RHH/RHW insulation
						Pull rope	Soft-Fiber Polyester
1384	E-49	41	RGS conduit	212.85	534.55	A-3006-2	3 + 1 gnd #6,#8, 600 V, RHH/RHW insulation
						Pull rope	Soft-Fiber Polyester
1385	E-49	41	RGS conduit	212.85	534.55	Pull rope	Soft-Fiber Polyester
						A-3006-2	3 + 1 gnd #6,#8, 600 V, RHH/RHW insulation
1386	E-49	41	RGS conduit	212.85	534.55	A-3006-2	3 + 1 gnd #6,#8, 600 V, RHH/RHW insulation
						Pull rope	Soft-Fiber Polyester

REGISTERED PROFESSIONAL ENGINEER — S. A. ESTOQUE, JR — No. E-10151 — Exp. 12/31/2008 ELECTRICAL — STATE OF CALIFORNIA

FOR REVISION ONLY

REQUEST FOR INFORMATION NOT ADDRESSED IN THIS CCO REMAIN IN FORCE

MARK	DATE	DESCRIPTIONS	BY	CH'D	CCO#
		REVISIONS			
1	03/04/08	BARRIER MODIFICATIONS	JS BM	RG SE	44

CONTRACT CHANGE ORDER NO._____
SHEET_____ OF _____

CONDUIT DATA

Conduit No	Reference	Size	Type	Total Fill (mm²)	Allowable Fill (mm²)	Included Cable No.	Conductor Type
1387	E-49	41	RGS conduit	212.85	534.55	A-3006-2	3 + 1 gnd #6,#8, 600 V, RHH/RHW insulation
						Pull rope	Soft-Fiber Polyester
1388	E-49	41	RGS conduit	212.85	534.55	A-3006-2	3 + 1 gnd #6,#8, 600 V, RHH/RHW insulation
						Pull rope	Soft-Fiber Polyester
1389	E-49	41	RGS conduit	212.85	534.55	Pull rope	Soft-Fiber Polyester
						A-3006-2	3 + 1 gnd #6,#8, 600 V, RHH/RHW insulation
1390	E-49	41	RGS conduit	212.85	534.55	Pull rope	Soft-Fiber Polyester
						A-3006-2	3 + 1 gnd #6,#8, 600 V, RHH/RHW insulation
1391	E-49	41	RGS conduit	0.00	534.55	Pull rope	Soft-Fiber Polyester
1392	E-50	41	RGS conduit	0.00	534.55	Pull rope	Soft-Fiber Polyester
1393	E-50	41	RGS conduit	0.00	534.55	Pull rope	Soft-Fiber Polyester
1394	E-50	41	RGS conduit	0.00	534.55	Pull rope	Soft-Fiber Polyester
1395	E-50	41	RGS conduit	0.00	534.55	Pull rope	Soft-Fiber Polyester
1396	E-50	41	RGS conduit	0.00	534.55	Pull rope	Soft-Fiber Polyester
1397	E-50	41	RGS conduit	0.00	534.55	Pull rope	Soft-Fiber Polyester
1398	E-50	41	RGS conduit	0.00	534.55	Pull rope	Soft-Fiber Polyester
1399	E-50	41	RGS conduit	0.00	534.55	Pull rope	Soft-Fiber Polyester
1447	E-46	41	RGS conduit	0.00	534.55	Pull rope	Soft-Fiber Polyester
1448	E-46	41	RGS conduit	0.00	534.55	Pull rope	Soft-Fiber Polyester
1449	E-46	41	RGS conduit	0.00	534.55	Pull rope	Soft-Fiber Polyester
1450	E-46	41	RGS conduit	0.00	534.55	Pull rope	Soft-Fiber Polyester
1451	E-46	41	RGS conduit	0.00	534.55	Pull rope	Soft-Fiber Polyester
1452	E-46	41	RGS conduit	0.00	534.55	Pull rope	Soft-Fiber Polyester
1453	E-46	41	RGS conduit	0.00	534.55	Pull rope	Soft-Fiber Polyester
1454	E-46	41	RGS conduit	0.00	534.55	Pull rope	Soft-Fiber Polyester
1455	E-46	41	RGS conduit	0.00	534.55	Pull rope	Soft-Fiber Polyester
1456	E-46	41	RGS conduit	0.00	534.55	Pull rope	Soft-Fiber Polyester

For continuation, see next sheet.

Caltrans Metric

DIST	COUNTY	ROUTE	KILOMETER POST TOTAL PROJECT	SHEET No	TOTAL SHEETS
04	SF	80	13.2/13.9	358 R1	1204

Jens Erlingsson 12/19/02
REGISTERED ELECTRICAL ENGINEER DATE

12-6-04
PLANS APPROVAL DATE

REGISTERED PROFESSIONAL ENGINEER — JENS ERLINGSSON — No. 8249 — Exp. 9/30/06 ELECTRICAL — STATE OF CALIFORNIA

PB POWER, Inc.
A Parsons Brinckerhoff Company
303 Second St., Suite 700N
San Francisco, CA 94107-1317

The State of California or its officers or agents shall not be responsible for the accuracy or completeness of electronic copies of this plan sheet.

Caltrans now has a web site! To get to the web site, go to http://www.dot.ca.gov

DESIGN OVERSIGHT — BEHZAD GOLEMOHAMMADI
CALCULATED/DESIGNED BY — PBP
CHECKED BY — AB
DATE REVISED — 8/02
REVISED BY

STATE OF CALIFORNIA - DEPARTMENT OF TRANSPORTATION
Caltrans

CONDUIT AND TRAY SCHEDULE

E-403

LAST REVISION 00-00-00
DATE PLOTTED => 5/22/2008
TIME PLOTTED => 10:58:57 AM

FOR REDUCED PLANS ORIGINAL SCALE IS IN MILLIMETERS 0 20 40 60 80

DGN FILE => T:\13103\MS\pse\SAS Struc\CCO\SAS CCO44\04-0120F1_0358R01.dgn
USERNAME => florico

CU 04251 EA 0120F1

CONDUIT DATA

Conduit No	Reference	Size	Type	Total Fill (mm²)	Allowable Fill (mm²)	Included Cable No.	Conductor Type
1735	E-46	41	RGS conduit	0.00	534.55	Pull rope	Soft-Fiber Polyester
1736	E-46	41	RGS conduit	0.00	534.55	Pull rope	Soft-Fiber Polyester
1737	E-47	41	RGS conduit	0.00	534.55	Pull rope	Soft-Fiber Polyester
1738	E-47	41	RGS conduit	126.88	534.55	Pull rope	Soft-Fiber Polyester
						UP105-3	1-2/C + gnd #10, 600 V, EPR insulation
1739	E-47	41	RGS conduit	126.88	534.55	UP105-3	1-2/C + gnd #10, 600 V, EPR insulation
						Pull rope	Soft-Fiber Polyester
1740	E-47	41	RGS conduit	126.88	534.55	UP105-3	1-2/C + gnd #10, 600 V, EPR insulation
						Pull rope	Soft-Fiber Polyester
1741	E-47	41	RGS conduit	126.88	534.55	UP105-3	1-2/C + gnd #10, 600 V, EPR insulation
						Pull rope	Soft-Fiber Polyester
1742	E-47	41	RGS conduit	0.00	534.55	Pull rope	Soft-Fiber Polyester
1743	E-47	41	RGS conduit	0.00	534.55	Pull rope	Soft-Fiber Polyester
1744	E-47	41	RGS conduit	0.00	534.55	Pull rope	Soft-Fiber Polyester
1745	E-47	41	RGS conduit	440.31	534.55	UP106-3	1-2/C + gnd #8, 600 V, EPR insulation
						A-3010-2	3 + 1 gnd #6,#8, 600 V, RHH/RHW insulation
						Pull rope	Soft-Fiber Polyester
1746	E-48	41	RGS conduit	440.31	534.55	Pull rope	Soft-Fiber Polyester
						A-3010-2	3 + 1 gnd #6,#8, 600 V, RHH/RHW insulation
						UP106-3	1-2/C + gnd #8, 600 V, EPR insulation
1747	E-48	41	RGS conduit	0.00	534.55	Pull rope	Soft-Fiber Polyester
1748	E-48	41	RGS conduit	0.00	534.55	Pull rope	Soft-Fiber Polyester
1749	E-48	41	RGS conduit	0.00	534.55	Pull rope	Soft-Fiber Polyester
1750	E-48	41	RGS conduit	0.00	534.55	Pull rope	Soft-Fiber Polyester
1751	E-49	41	RGS conduit	0.00	534.55	Pull rope	Soft-Fiber Polyester
1752	E-49	41	RGS conduit	0.00	534.55	Pull rope	Soft-Fiber Polyester
1753	E-49	41	RGS conduit	0.00	534.55	Pull rope	Soft-Fiber Polyester
1754	E-49	41	RGS conduit	0.00	534.55	Pull rope	Soft-Fiber Polyester
1755	E-49	41	RGS conduit	0.00	534.55	Pull rope	Soft-Fiber Polyester
1756	E-50	41	RGS conduit	0.00	534.55	Pull rope	Soft-Fiber Polyester
1757	E-50	41	RGS conduit	0.00	534.55	Pull rope	Soft-Fiber Polyester
1758	E-50	41	RGS conduit	0.00	534.55	Pull rope	Soft-Fiber Polyester
1759	E-50	41	RGS conduit	0.00	534.55	Pull rope	Soft-Fiber Polyester
1760	E-50	41	RGS conduit	49.21	534.55	Pull rope	Soft-Fiber Polyester
						UP108-3A	2 + 1 gnd #12,#12, 600 V, RHH/RHW insulation
1761	E-50	41	RGS conduit	49.21	534.55	UP108-3A	2 + 1 gnd #12,#12, 600 V, RHH/RHW insulation
						Pull rope	Soft-Fiber Polyester
1762	E-50	41	RGS conduit	373.50	534.55	1106	1-3/C + gnd #6, 600 V, EPR insulation
						UP108-3A	2 + 1 gnd #12,#12, 600 V, RHH/RHW insulation
						Pull rope	Soft-Fiber Polyester
1763	E-51	41	RGS conduit	324.29	534.55	Pull rope	Soft-Fiber Polyester
						1106	1-3/C + gnd #6, 600 V, EPR insulation
1764	E-51	41	RGS conduit	0.00	534.55	Pull rope	Soft-Fiber Polyester
1765	E-51	41	RGS conduit	324.29	534.55	1106	1-3/C + gnd #6, 600 V, EPR insulation
						Pull rope	Soft-Fiber Polyester

DATE	REVISED BY	DATE REVISED
8/02	PBP	8/02 AB

CALCULATED/DESIGNED BY
CHECKED BY

DESIGN OVERSIGHT
BEHZAD GOLEMOHAMMADI

STATE OF CALIFORNIA - DEPARTMENT OF TRANSPORTATION
Caltrans

REQUEST FOR INFORMATION NOT ADDRESSED IN THIS CCO REMAIN IN FORCE					
2	03/04/08	BARRIER MODIFICATIONS	JS BM	RG SE	44
1	02/19/08	ELECTRICAL MODIFICATIONS	MP EL	RR	42
MARK	DATE	DESCRIPTIONS	BY	CH'D	CCO#
		REVISIONS			

CONTRACT CHANGE ORDER NO._____
SHEET_____ OF_____

FOR REVISION ONLY

Caltrans Metric

DIST	COUNTY	ROUTE	KILOMETER POST TOTAL PROJECT	SHEET No	TOTAL SHEETS
04	SF	80	13.2/13.9	360 R2	1204

REGISTERED ELECTRICAL ENGINEER — 12/19/02 DATE

12-6-04
PLANS APPROVAL DATE

JENS ERLINGSSON No. 8249 Exp. 9/30/06 ELECTRICAL — REGISTERED PROFESSIONAL ENGINEER — STATE OF CALIFORNIA

S. A. ESTOQUE JR. No. E-10151 Exp. 12/31/2008 ELECTRICAL — REGISTERED PROFESSIONAL ENGINEER — STATE OF CALIFORNIA

PB POWER, Inc.
A Parsons Brinckerhoff Company
303 Second St., Suite 700N
San Francisco, CA 94107-1317

The State of California or its officers or agents shall not be responsible for the accuracy or completeness of electronic copies of this plan sheet.

Caltrans now has a web site! To get to the web site, go to http://www.dot.ca.gov

CONDUIT DATA

Conduit No	Reference	Size	Type	Total Fill (mm²)	Allowable Fill (mm²)	Included Cable No.	Conductor Type
1766	E-79	53	RGS-PVC coated conduit	754.18	879.42	Pull rope	Soft-Fiber Polyester
						1115	1-3/C + gnd #1/0, 600 V, EPR insulation
1767	E-79	53	RGS-PVC coated conduit	147.25	879.42	Pull rope	Soft-Fiber Polyester
						1115-2	1-3/C #16, 600 V, EPR insulation
						1115-1	1-3/C #14, 600 V, EPR insulation
1768	E-120, E-101	78	RGS-PVC coated conduit	882.89	1935.24	Pull rope	Soft-Fiber Polyester
						1117	1-3/C + gnd #2/0, 600 V, EPR insulation
1769	E-120, E-101	27	RGS-PVC coated conduit	147.25	229.03	1117-2	1-3/C #16, 600 V, EPR insulation
						Pull rope	Soft-Fiber Polyester
						1117-1	1-3/C #14, 600 V, EPR insulation
~~1831~~							
1832	E-46	41	RGS conduit	474.91	534.55	A-1035-1	1-3/C + gnd #6, 600V, EPR insulation
						UP104-3A	2 + 1gnd #12,#12, 600 V, RHH/RHW insulation
						Pull rope	Soft-Fiber Polyester
						S-1031-1	1-3/C + gnd #2, 600V, EPR insulation
1833	E-46	41	RGS conduit	474.91	534.55	S-1031-1	1-3/C + gnd #2, 600V, EPR insulation
						A-1035-1	1-3/C + gnd #6, 600V, EPR insulation
						UP104-3A	2 + 1gnd #12,#12, 600 V, RHH/RHW insulation
						Pull rope	Soft-Fiber Polyester
1834	E-46	41	RGS conduit	474.91	534.55	UP104-3A	2 + 1 gnd #12,#12, 600 V, RHH/RHW insulation
						A-1035-1	1-3/C + gnd #6, 600V, EPR insulation
						Pull rope	Soft-Fiber Polyester
						S-1031-1	1-3/C + gnd #2, 600V, EPR insulation
1835	E-46	41	RGS conduit	0.00	534.55	Pull rope	Soft-Fiber Polyester
1836	E-46, E-47	41	RGS conduit	0.00	534.55	Pull rope	Soft-Fiber Polyester
1837	E-47	41	RGS conduit	0.00	534.55	Pull rope	Soft-Fiber Polyester
1838	E-47	41	RGS conduit	212.85	534.55	A-3009-2	3 + 1 gnd #6,#8, 600 V, RHH/RHW insulation
						Pull rope	Soft-Fiber Polyester
1839	E-47	41	RGS conduit	212.85	534.55	Pull rope	Soft-Fiber Polyester
						A-3009-2	3 + 1 gnd #6,#8, 600 V, RHH/RHW insulation
1840	E-47	41	RGS conduit	212.85 2	534.55	A-3009-2	3 + 1 gnd #6,#8, 600 V, RHH/RHW insulation 2
						2 Pull rope	Soft-Fiber Polyester
1841	E-47	41	RGS conduit	212.85 2	534.55	2 Pull rope	Soft-Fiber Polyester
						A-3009-2	3 + 1 gnd #6,#8, 600 V, RHH/RHW insulation
1842	E-47	41	RGS conduit	212.85	534.55	Pull rope	Soft-Fiber Polyester
						A-3009-2	3 + 1 gnd #6,#8, 600 V, RHH/RHW insulation

For continuation, see next sheet.

CONDUIT AND TRAY SCHEDULE

E-405

LAST REVISION 00-00-00
DATE PLOTTED => 5/22/2008
TIME PLOTTED => 10:59:14 AM

FOR REDUCED PLANS ORIGINAL SCALE IS IN MILLIMETERS 0 20 40 60 80

DGN FILE = T:\13103\MS\pse\SAS Struc\CCO\SAS CCO44\04-0120F1_0340R02.dgn
USERNAME = florico

CU 04251 EA 0120F1

DIST	COUNTY	ROUTE	KILOMETER POST TOTAL PROJECT	SHEET NO	TOTAL SHEETS
04	SF	80	13.2/13.9	361 R2	1204

Jens Erlingsson 12/19/02
REGISTERED ELECTRICAL ENGINEER DATE

12-6-04
PLANS APPROVAL DATE

REGISTERED PROFESSIONAL ENGINEER — JENS ERLINGSSON No. 8249 Exp. 9/30/06 ELECTRICAL — STATE OF CALIFORNIA

PB POWER, Inc.
A Parsons Brinckerhoff Company
303 Second St., Suite 700N
San Francisco, CA 94107-1317

The State of California or its officers or agents shall not be responsible for the accuracy or completeness of electronic copies of this plan sheet.

Caltrans now has a web site! To get to the web site, go to http://www.dot.ca.gov

REQUEST FOR INFORMATION NOT ADDRESSED IN THIS CCO REMAIN IN FORCE

MARK	DATE	DESCRIPTIONS (REVISIONS)	BY	CH'D	CCO#
2	03/04/08	BARRIER MODIFICATIONS	JS BM	RG SE	44
1	02/19/08	ELECTRICAL MODIFICATIONS	MP EL	RR	42

REGISTERED PROFESSIONAL ENGINEER — S. A. ESTOQUE, JR. No. E-10151 Exp. 12/31/2008 ELECTRICAL — STATE OF CALIFORNIA

CONTRACT CHANGE ORDER NO._____
SHEET_____ OF_____

FOR REVISION ONLY

CONDUIT DATA

Conduit No	Reference	Size	Type	Total Fill (mm²)	Allowable Fill (mm²)	Included Cable No.	Conductor Type
1843	E-47	41	RGS conduit	0.00	534.55	Pull rope	Soft-Fiber Polyester
1844	E-47	41	RGS conduit	0.00	534.55	Pull rope	Soft-Fiber Polyester
1845	E-47	41	RGS conduit	0.00	534.55	Pull rope	Soft-Fiber Polyester
1846	E-48	41	RGS conduit	0.00	534.55	Pull rope	Soft-Fiber Polyester
1847	E-48	41	RGS conduit	0.00	534.55	Pull rope	Soft-Fiber Polyester
1848	E-48	41	RGS conduit	0.00	534.55	Pull rope	Soft-Fiber Polyester
1849	E-48	41	RGS conduit	0.00	534.55	Pull rope	Soft-Fiber Polyester
1850	E-48	41	RGS conduit	0.00	534.55	Pull rope	Soft-Fiber Polyester
1851	E-49	41	RGS conduit	0.00	534.55	Pull rope	Soft-Fiber Polyester
1852	E-49	41	RGS conduit	0.00	534.55	Pull rope	Soft-Fiber Polyester
1853	E-49	41	RGS conduit	0.00	534.55	Pull rope	Soft-Fiber Polyester
1854	E-49	41	RGS conduit	262.06	534.55		
						UP107-3A	2 + 1 gnd #12,#12, 600 V, RHH/RHW insulation
						Pull rope	Soft-Fiber Polyester
1855	E-49	41	RGS conduit	262.06	534.55		
						UP107-3A	2 + 1 gnd #12,#12, 600 V, RHH/RHW insulation
						Pull rope	Soft-Fiber Polyester
1856	E-50	41	RGS conduit	262.06	534.55		
						UP107-3A	2 + 1 gnd #12,#12, 600 V, RHH/RHW insulation
						Pull rope	Soft-Fiber Polyester
1857	E-50	41	RGS conduit	162.40	534.55	UP107-3A	2 + 1 gnd #12,#12, 600 V, RHH/RHW insulation
						Pull rope	Soft-Fiber Polyester
1858	E-50	41	RGS conduit	0.00	534.55		
						Pull rope	Soft-Fiber Polyester
1859	E-50	41	RGS conduit	0.00	534.55	Pull rope	Soft-Fiber Polyester
1860	E-50	41	RGS conduit	0.00	534.55		
						Pull rope	Soft-Fiber Polyester
1861	E-50	41	RGS conduit	265.64	534.55	Pull rope	Soft-Fiber Polyester
						S-1032-2	3 + 1 gnd #6, #8, 600 V, RHH/RHW insulation
1862	E-50, E-51	41	RGS conduit	265.64	534.55	Pull rope	Soft-Fiber Polyester
						S-1032-2	3 + 1 gnd #6, #8, 600 V, RHH/RHW insulation
1863	E-51	41	RGS conduit	265.64	534.55	Pull rope	Soft-Fiber Polyester
						S-1032-S	3 + 1 gnd #6, #8, 600 V, RHH/RHW insulation
1864	E-51	41	RGS conduit	0.00	534.55	Pull rope	Soft-Fiber Polyester
1865	E-51	41	RGS conduit	0.00	534.55	Pull rope	Soft-Fiber Polyester
1900	E-50	41	RGS conduit	0.00	534.55	Pull rope	Soft-Fiber Polyester
1901	E-50	41	RGS conduit	0.00	534.55	Pull rope	Soft-Fiber Polyester
1902	E-50	41	RGS conduit	0.00	534.55	Pull rope	Soft-Fiber Polyester
1903	E-51	41	RGS conduit	0.00	534.55	Pull rope	Soft-Fiber Polyester
1904	E-51	41	RGS conduit	0.00	534.55	Pull rope	Soft-Fiber Polyester
1905	E-51	41	RGS conduit	0.00	534.55	Pull rope	Soft-Fiber Polyester
1906	E-51	41	RGS conduit	0.00	534.55	Pull rope	Soft-Fiber Polyester

CONDUIT DATA

Conduit No	Reference	Size	Type	Total Fill (mm²)	Allowable Fill (mm²)	Included Cable No.	Conductor Type
1907	E-51	41	RGS conduit	0.00	534.55	Pull rope	Soft-Fiber Polyester
1908	E-51	41	RGS conduit	0.00	534.55	Pull rope	Soft-Fiber Polyester
1950	E-50	41	RGS conduit	0.00 (2)	534.55 (2)	Pull rope	Soft-Fiber Polyester
1951	E-50	41	RGS conduit	0.00	534.55	Pull rope	Soft-Fiber Polyester
1952	E-50	41	RGS conduit	0.00	534.55	Pull rope	Soft-Fiber Polyester
1953	E-51	41	RGS conduit	0.00	534.55	Pull rope	Soft-Fiber Polyester
1954	E-51	41	RGS conduit	0.00	534.55	Pull rope	Soft-Fiber Polyester
1955	E-51	41	RGS conduit	0.00	534.55	Pull rope	Soft-Fiber Polyester
1956	E-51	41	RGS conduit	0.00	534.55	Pull rope	Soft-Fiber Polyester
1957	E-51	41	RGS conduit	0.00	534.55	Pull rope	Soft-Fiber Polyester
1958	E-51	41	RGS conduit	0.00	534.55	Pull rope	Soft-Fiber Polyester
1T13	E-96, E-101	305	152.4 mm siderail ladder tray	2780.99	19354.80	1391	3-1/C #4/0 + 1/C #1/0 gnd, 15 kV, EPR insulation
						Pull rope	Soft-Fiber Polyester
1T14	E-128, E-19	305	152.4 mm siderail ladder tray	2780.99	8387.08	1391	3-1/C #4/0 + 1/C #1/0 gnd, 15 kV, EPR insulation
						Pull rope	Soft-Fiber Polyester
1T23	E-96, E-101	610	152.4 mm siderail ladder tray	13557.45 (2)	18064.48	A-3010-1	1-3/C + gnd #2, 600 V, EPR insulation (2)
						1115-2	1-3/C #16, 600 V, EPR insulation
						S-1031-1	1-3/C + gnd #2, 600 V, EPR insulation
						1115-1	1-3/C #14, 600 V, EPR insulation
						2201-1	1-2/C + gnd #8, 600 V, EPR insulation
						A-3009-3	1-3/C + gnd #6, 600 V, EPR insulation (2)
						1106	1-3/C + gnd #6, 600 V, EPR insulation
						S-3056-5	1-4/C #14, 600 V, EPR insulation
						S-3056-7	1-2/C #14, 600 V, EPR insulation
						S-3056-8	1-4/C #14, 600 V, EPR insulation
						Pull rope	Soft-Fiber Polyester
						A-3010-3	1-3/C #6 + gnd 600 V, RHH/RHW insulation
						S-3051-1	1-3/C + gnd #4, 600 V, EPR insulation
						UP108-3	1-2/C + gnd #8, 600 V, EPR insulation
						1255-1	1-3/C #16 ,600V, EPR insulation
						A-3001-1	1-3/C + gnd #4, 600 V, EPR insulation
						A-3012-1	1-3/C + gnd #2, 600 V, EPR insulation
						A-3013-1	1-3/C + gnd #2, 600 V, EPR insulation
						S-3022-1	1-3/C + gnd #2, 600 V, EPR insulation
						A-3002-1	1-3/C + gnd #4, 600 V, EPR insulation
						UP107-6	1-2/C + gnd #8, 600 V, EPR insulation

For continuation, see next sheet.

CONDUIT AND TRAY SCHEDULE

E-406

DATE	REVISED BY	DATE REVISED
8/02	PBP	8/02 AB

CALCULATED/DESIGNED BY — CHECKED BY

DESIGN OVERSIGHT — BEHZAD GOLEMOHAMMADI

STATE OF CALIFORNIA - DEPARTMENT OF TRANSPORTATION — Caltrans

LAST REVISION 00-00-00 — DATE PLOTTED = 5/22/2008 — TIME PLOTTED = 10:59:33 AM

FOR REDUCED PLANS ORIGINAL SCALE IS IN MILLIMETERS 0 20 40 60 80

DGN FILE = T:\13103\MS\pse\SAS Struc\CCO\SAS CCO44\04-0120f1_0361R02.dgn
USERNAME = florico

CU 04251 — EA 0120F1

DIST	COUNTY	ROUTE	KILOMETER POST TOTAL PROJECT	SHEET No	TOTAL SHEETS
04	SF	80	13.2/13.9	362 R1	1204

REGISTERED ELECTRICAL ENGINEER DATE 12/19/02

12-6-04
PLANS APPROVAL DATE

PB POWER, Inc.
A Parsons Brinckerhoff Company
303 Second St., Suite 700N
San Francisco, CA 94107-1317

REGISTERED PROFESSIONAL ENGINEER JENS ERLINGSSON No. 8249 Exp. 9/30/06 ELECTRICAL STATE OF CALIFORNIA

The State of California or its officers or agents shall not be responsible for the accuracy or completeness of electronic copies of this plan sheet.

Caltrans now has a web site! To get to the web site, go to http://www.dot.ca.gov

Caltrans Metric

REGISTERED PROFESSIONAL ENGINEER S. A. ESTOQUE, JR No. E-10151 Exp. 12/31/2008 ELECTRICAL STATE OF CALIFORNIA

FOR REVISION ONLY

REQUEST FOR INFORMATION NOT ADDRESSED IN THIS CCO REMAIN IN FORCE

MARK	DATE	DESCRIPTIONS	BY	CH'D	CCO#
1	03/04/08	BARRIER MODIFICATIONS	TW	RG	44

REVISIONS

CONTRACT CHANGE ORDER NO.________
SHEET_____ OF _____

CONDUIT DATA

Conduit No.	Reference	Size	Type	Total Fill (mm²)	Allowable Fill (mm²)	Included Cable No.	Conductor Type
						1117-1	1-3/C #14, 600 V, EPR insulation
						A-3009-1	1-3/C + gnd #2, 600 V, EPR insulation
						1202-4	1-3/C #14, 600 V, EPR insulation
						1117-2	1-3/C #16, 600 V, EPR insulation
						S-3021-1	1-3/C + gnd #4, 600 V, EPR insulation
						S-3023-1	1-3/C + gnd #4, 600 V, EPR insulation
						S-3056-1	1-3/C + gnd #6, 600 V, EPR insulation
						S-1031-3	1-3/C + gnd #4, 600 V, EPR insulation
						S-1032-1	1-3/C + gnd #4, 600 V, EPR insulation
						A-1035-1	1-3/C + gnd #6, 600 V, EPR insulation
						1202-3	1-7/C #16, 600 V, EPR insulation
						1099	1-3/C + gnd #2, 600 V, EPR insulation
						1098	1-3/C + gnd #2, 600 V, EPR insulation
						1097	1-3/C + gnd #2, 600 V, EPR insulation
						1096	1-3/C + gnd #2, 600 V, EPR insulation
						1095	1-3/C + gnd #2, 600 V, EPR insulation
						1117	1-3/C + gnd #2/0, 600 V, EPR insulation
						1256-1	1-3/C #16, 600 V, EPR insulation
						1202-1	1-2/C + gnd #8 ,600 V, EPR insulation
						1255-2	1-3/C #16, 600 V, EPR insulation
						A-3008-1	1-2/C + gnd #8, 600 V, EPR insulation
						1202-2	1-3/C #14, 600 V, EPR insulation
						A-3011-1	1-3/C + gnd #2, 600 V, EPR insulation
1T24	E-114	610	152.4 mm siderail ladder tray	1652.27	18064.48	UP104-7	1-2/C + gnd #8, 600 V, EPR insulation
						1095	1-3/C + gnd #2, 600 V, EPR insulation
						Pull rope	Soft-Fiber Polyester
						UP104-9	1-2/C + gnd #10, 600 V, EPR insulation
						UP104-8	1-2/C + gnd #8, 600 V, EPR insulation
						1255-1	1-3/C #16, 600 V, EPR insulation
						UP104-3	1-2/C + gnd #10, 600 V, EPR insulation
						UP204-1	1-2/C + gnd #10, 600 V, EPR insulation
						UP104-6	1-2/C + gnd #8 ,600 V, EPR insulation
1T25	E-115	610	152.4 mm siderail ladder tray	3092.69 (1)	18064.48	UP105-10	1-2/C + gnd #8, 600 V, EPR insulation
						1201-1	1-2/C + gnd #8, 600 V, EPR insulation
						1201-2	1-2/C + gnd #8, 600 V, EPR insulation
						1201-6	1-2/C + gnd #8, 600 V, EPR insulation
						1096	1-3/C + gnd #2, 600 V, EPR insulation
						1255-1	1-3/C #16, 600 V, EPR insulation
						1202-4	1-3/C #14, 600 V, EPR insulation
						UP105-8	1-2/C + gnd #8, 600 V, EPR insulation
						UP205-1	1-2/C + gnd #10, 600 V, EPR insulation
						1115-1	1-3/C #14, 600 V, EPR insulation
						1202-3	1-7/C #16, 600 V, EPR insulation
						1202-2	1-3/C #14, 600 V, EPR insulation
						1115-2	1-3/C #16, 600 V, EPR insulation
						1255-2	1-3/C #16, 600 V, EPR insulation
						Pull rope	Soft-Fiber Polyester
						UP105-3	1-2/C + gnd #10, 600 V, EPR insulation
						UP105-9	1-2/C + gnd #8, 600 V, EPR insulation
						UP105-7	1-2/C + gnd #8, 600 V, EPR insulation
					(1)		
						S-3056-5	1-4/C #14, 600 V, EPR insulation
						S-3056-7	1-2/C #14, 600 V, EPR insulation
1T26	E-116	610	152.4 mm siderail ladder tray	2773.72	18064.48	UP106-1	1-2/C + gnd #8, 600 V, EPR insulation
						UP106-8	1-2/C + gnd #8, 600 V, EPR insulation
						UP106-3	1-2/C + gnd #8, 600 V, EPR insulation
						1255-2	1-3/C #16, 600 V, EPR insulation
						UP206-1	1-2/C + gnd #10, 600 V, EPR insulation
						Pull rope	Soft-Fiber Polyester
						1202-2	1-3/C #14, 600 V, EPR insulation
						1202-3	1-7/C #16, 600 V, EPR insulation
						UP106-6	1-2/C + gnd #8, 600 V, EPR insulation
						UP106-7	1-2/C + gnd #8, 600 V, EPR insulation
						CCTVE01BA	TVP
						CCTVE01BB	TVCP
						UP106-9	1-2/C + gnd #8, 600 V, EPR insulation
						1097	1-3/C + gnd #2, 600 V, EPR insulation
						1202-4	1-3/C #14, 600 V, EPR insulation
						1202-1	1-2/C + gnd #8, 600 V, EPR insulation
1T27	E-117	610	152.4 mm siderail ladder tray	1726.55	18064.48	UP107-6	1-2/C + gnd #8, 600 V, EPR insulation
						Pull rope	Soft-Fiber Polyester
						UP107-7	1-2/C + gnd #8, 600 V, EPR insulation
						UP107-9	1-2/C + gnd #8, 600 V, EPR insulation
						1256-1	1-3/C #16 ,600V, EPR insulation
						UP107-8	1-2/C + gnd #8, 600 V, EPR insulation

CONDUIT DATA

Conduit No.	Reference	Size	Type	Total Fill (mm²)	Allowable Fill (mm²)	Included Cable No.	Conductor Type
						1098	1-3/C + gnd #2, 600 V, EPR insulation
						UP107-3	1-2/C + gnd #8, 600 V, EPR insulation
1T28	E-118	610	152.4 mm siderail ladder tray	3336.36	18064.48	UP108-8	1-2/C + gnd #8, 600 V, EPR insulation
						UP108-3	1-2/C + gnd #8, 600 V, EPR insulation
						UP108-10	1-2/C + gnd #8, 600 V, EPR insulation
						S-3056-8	1-4/C #14, 600 V, EPR insulation
						UP108-4	1-2/C + gnd #8, 600 V, EPR insulation
						Pull rope	Soft-Fiber Polyester
						UP108-7	1-2/C + gnd #8, 600 V, EPR insulation
						1117-2	1-3/C #16 ,600V, EPR insulation
						2201-5	1-3/C #14, 600 V, EPR insulation
						2201-3	1-3/C #14, 600 V, EPR insulation
						2201-1	1-2/C + gnd #8, 600 V, EPR insulation
						2201-4	1-9/C #16, 600 V, EPR insulation
						1118-2	1-3/C #16, 600 V, EPR insulation
						UP108-9	1-2/C + gnd #8, 600 V, EPR insulation
						UP108-12	1-2/C + gnd #8, 600 V, EPR insulation
						1117-1	1-3/C #14, 600 V, EPR insulation
						1118-1	1-3/C #14, 600 V, EPR insulation
						UP108-2	1-2/C + gnd #8, 600 V, EPR insulation
						1099	1-3/C + gnd #2, 600 V, EPR insulation
						1256-1	1-3/C #16, 600 V, EPR insulation
1T29	E-128, E-19	610	152.4 mm siderail ladder tray	11507.41	18064.48	1106	1-3/C + gnd #6, 600 V, EPR insulation
						S-1032-1	1-3/C + gnd #4, 600 V, EPR insulation
						A-3002-1	1-3/C + gnd #4, 600 V, EPR insulation
						A-3001-1	1-3/C + gnd #4, 600 V, EPR insulation
						A-3013-1	1-3/C + gnd #2, 600 V, EPR insulation
						A-3012-1	1-3/C + gnd #2, 600 V, EPR insulation
						S-3023-1	1-3/C + gnd #4, 600 V, EPR insulation
						1097	1-3/C + gnd #2, 600 V, EPR insulation
						S-3051-1	1-3/C + gnd #4, 600 V, EPR insulation
						A-1035-1	1-3/C + gnd #6, 600 V, EPR insulation
						A-3011-1	1-3/C + gnd #2, 600 V, EPR insulation
						S-3021-1	1-3/C + gnd #4, 600 V, EPR insulation
						S-3022-1	1-3/C + gnd #2, 600 V, EPR insulation
						S-3056-1	1-3/C + gnd #6, 600 V, EPR insulation
						1098	1-3/C + gnd #2, 600 V, EPR insulation
						1096	1-3/C + gnd #2, 600 V, EPR insulation
						1095	1-3/C + gnd #2, 600 V, EPR insulation
						S-1031-1	1-3/C + gnd #2, 600 V, EPR insulation
						Pull rope	Soft-Fiber Polyester
						1099	1-3/C + gnd #2, 600 V, EPR insulation
						A-3008-1	1-2/C + gnd #8, 600 V, EPR insulation
						1117	1-3/C + gnd #2/0, 600 V, EPR insulation
						A-3010-1	1-3/C + gnd #2, 600 V, EPR insulation
						1115	1-3/C + gnd #1/0, 600 V, EPR insulation
						1115-1	1-3/C #14, 600 V, EPR insulation
						1115-2	1-3/C #16, 600 V, EPR insulation
						A-3009-1	1-3/C + gnd #2, 600 V, EPR insulation

For continuation, see next sheet.

CONDUIT AND TRAY SCHEDULE

E-407

STATE OF CALIFORNIA - DEPARTMENT OF TRANSPORTATION
Caltrans

DESIGN OVERSIGHT: BEHZAD GOLEMOHAMMADI
CALCULATED/DESIGNED BY: PBP — DATE 8/02 — REVISED BY
CHECKED BY: AB — 8/02 — DATE REVISED

LAST REVISION 00-00-00
DATE PLOTTED => 5/22/2008
TIME PLOTTED => 10:59:53 AM

FOR REDUCED PLANS ORIGINAL SCALE IS IN MILLIMETERS 0 20 40 60 80

DGN FILE => T:\13103\MS\pse\SAS Struc\CCO\SAS CCO44\04-0120f1_0362R01.dgn
USERNAME => llorico

CU 04251
EA 0120F1

DIST	COUNTY	ROUTE	KILOMETER POST TOTAL PROJECT	SHEET No	TOTAL SHEETS
04	SF	80	13.2/13.9	363 R1	1204

Jens Erlingsson 12/19/02
REGISTERED ELECTRICAL ENGINEER DATE

12-6-04
PLANS APPROVAL DATE

PB POWER, Inc.
A Parsons Brinckerhoff Company
303 Second St., Suite 700N
San Francisco, CA 94107-1317

REGISTERED PROFESSIONAL ENGINEER — JENS ERLINGSSON — No. 8249 — Exp. 9/30/06 — ELECTRICAL — STATE OF CALIFORNIA

The State of California or its officers or agents shall not be responsible for the accuracy or completeness of electronic copies of this plan sheet.

Caltrans now has a web site! To get to the web site, go to http://www.dot.ca.gov

REGISTERED PROFESSIONAL ENGINEER — S. A. ESTOQUE, JR. — No. E-10151 — Exp. 12/31/2008 — ELECTRICAL — STATE OF CALIFORNIA

FOR REVISION ONLY

REQUEST FOR INFORMATION NOT ADDRESSED IN THIS CCO REMAIN IN FORCE

MARK	DATE	DESCRIPTIONS	BY	CH'D	CCO#
		REVISIONS			
1	03/04/08	BARRIER MODIFICATIONS	TW	RG	44

CONTRACT CHANGE ORDER NO._____
SHEET_____ OF _____

CONDUIT DATA

Conduit No	Reference	Size	Type	Total Fill (mm²)	Allowable Fill (mm²)	Included Cable No.	Conductor Type
1T33	E-96, E-101	610	152.4 mm siderail ladder tray	7720.94	18064.48	UP104-8	1-2/C + gnd #8, 600 V, EPR insulation
						UP108-12	1-2/C + gnd #8, 600 V, EPR insulation
						UP108-9	1-2/C + gnd #8, 600 V, EPR insulation
						A-1011-1	1-3/C + gnd #2, 600 V, EPR insulation
						A-1012-1	1-3/C + gnd #2, 600 V, EPR insulation
						UP104-3	1-2/C + gnd #10, 600 V, EPR insulation
						UP107-3	1-2/C + gnd #8, 600 V, EPR insulation
						UP105-9	1-2/C + gnd #8, 600 V, EPR insulation
						UP104-9	1-2/C + gnd #10, 600 V, EPR insulation
						Pull rope	Soft-Fiber Polyester
						UP108-4	1-2/C + gnd #8, 600 V, EPR insulation
						UP108-2	1-2/C + gnd #8, 600 V, EPR insulation
						UP108-7	1-2/C + gnd #8, 600 V, EPR insulation
						UP107-7	1-2/C + gnd #8, 600 V, EPR insulation
						UP106-7	1-2/C + gnd #8, 600 V, EPR insulation
						UP105-7	1-2/C + gnd #8, 600 V, EPR insulation
						A-1013-1	1-3/C + gnd #2, 600 V, EPR insulation
						UP107-9	1-2/C + gnd #8, 600 V, EPR insulation
						A-1014-1	1-3/C + gnd #2, 600 V, EPR insulation
						UP106-3	1-2/C + gnd #8, 600 V, EPR insulation
						UP105-3	1-2/C + gnd #10, 600 V, EPR insulation
						UP106-6	1-2/C + gnd #8, 600 V, EPR insulation
						UP105-10	1-2/C + gnd #8, 600 V, EPR insulation
						UP104-6	1-2/C + gnd #8, 600 V, EPR insulation
						UP107-8	1-2/C + gnd #8, 600 V, EPR insulation
						UP106-8	1-2/C + gnd #8, 600 V, EPR insulation
						UP105-8	1-2/C + gnd #8, 600 V, EPR insulation
						UP104-7	1-2/C + gnd #8, 600 V, EPR insulation
						UP108-8	1-2/C + gnd #8, 600 V, EPR insulation
						UP106-9	1-2/C + gnd #8, 600 V, EPR insulation
						UP108-10	1-2/C + gnd #8, 600 V, EPR insulation
1T39	E-128, E-19	610	152.4 mm siderail ladder tray	1054.36	18064.48	A-1011-1	1-3/C + gnd #2, 600 V, EPR insulation
						A-1014-1	1-3/C + gnd #2, 600 V, EPR insulation
						Pull rope	Soft-Fiber Polyester
1T43	E-96, E-101	610	152.4 mm siderail ladder tray	11370.25 (1)	38709.60	MVDSW04A	MVDS DLC
						1144	1 - 2 pair, shielded #18 with IS/OA , 300 V, PVC jacket
						1475-3C	12 Fiber, single mode fiberoptic cable
						(1)	
						1475-3A	12 Fiber, single mode fiberoptic cable
						1474-4	50 pair #18, shielded pairs, IS/OS shield 600 V, XLPE insul., PVC jacket
						1145	1 - 2 pair, shielded #18 with IS/OA , 300 V, PVC jacket
						1474-5	50 pair #18, shielded pairs, IS/OS shield 600 V, XLPE insul., PVC jacket
						1474-7	50 pair #18, shielded pairs, IS/OS shield 600 V, XLPE insul., PVC jacket
						1477-2	72 Fiber, single mode fiberoptic riser cable
						1475-3	72 Fiber, single mode fiberoptic riser cable
						MVDSW02A	MVDS DLC
						(1)	
						1475-3B	12 Fiber, single mode fiberoptic cable
						2900-472B	4 pair #22, shielded pairs, FEP insulation
						2900-182A	4 pair #22, shielded pairs, FEP insulation
						2900-182B	4 pair #22, shielded pairs, FEP insulation
						2900-202A	4 pair #22, shielded pairs, FEP insulation
						2900-282A	4 pair #22, shielded pairs, FEP insulation
						2900-342A	4 pair #22, shielded pairs, FEP insulation
						2900-392A	4 pair #22, shielded pairs, FEP insulation
						2900-462A	4 pair #22, shielded pairs, FEP insulation
						(1)	
						2900-472A	4 pair #22, shielded pairs, FEP insulation
						Pull rope	Soft-Fiber Polyester
						2900-472C	4 pair #22, shielded pairs, FEP insulation
						1474-8	50 pair #18, shielded pairs, IS/OS shield 600 V, XLPE insul., PVC jacket
						1473-5	50 pair #18, shielded pairs, IS/OS shield 600 V, XLPE insul., PVC jacket
						1473-7	50 pair #18, shielded pairs, IS/OS shield 600 V, XLPE insul., PVC jacket
						1473-10	50 pair #18, shielded pairs, IS/OS shield 600V, XLPE insul., PVC jacket

CONDUIT DATA

Conduit No	Reference	Size	Type	Total Fill (mm²)	Allowable Fill (mm²)	Included Cable No.	Conductor Type
						1474-10	50 pair #18, shielded pairs, IS/OS shield 600 V, XLPE insul., PVC jacket
						2900-462B	4 pair #22, shielded pairs, FEP insulation
1T44	E-114	610	152.4 mm siderail ladder tray	3785.76	38709.60	1473-5	50 pair #18, shielded pairs, IS/OS shield 600 V, XLPE insul., PVC jacket
						1474-5	50 pair #18, shielded pairs, IS/OS shield 600 V, XLPE insul., PVC jacket
						1475-3A	12 Fiber, single mode fiberoptic cable
						MVDSW02A	MVDS DLC
						Pull rope	Soft-Fiber Polyester
						1474-4	50 pair #18, shielded pairs, IS/OS shield 600 V, XLPE insul., PVC jacket
1T45	E-115	610	152.4 mm siderail ladder tray	3563.45 (1)	38709.60	Pull rope	Soft-Fiber Polyester
						(1)	
						2900-182A	4 pair #22, shielded pairs, FEP insulation
						2910-10	4 pair #22, shielded pairs, 300 V, PE insulation
						2910-8	4 pair #22, shielded pairs, 300 V, PE insulation
						1473-5	50 pair #18, shielded pairs, IS/OS shield 600 V, XLPE insul., PVC jacket
						1474-5	50 pair #18, shielded pairs, IS/OS shield 600 V, XLPE insul., PVC jacket
						1474-5B	1 - 6 pair, shielded #18 with overall shield , 300 V, PVC jacket
						1474-5A	1 - 6 pair, shielded #18 with overall shield , 300 V, PVC jacket
						2900-472C	4 pair #22, shielded pairs, FEP insulation
						2900-182B	4 pair #22, shielded pairs, FEP insulation
						2900-472A	4 pair #22, shielded pairs, FEP insulation
						2900-462B	4 pair #22, shielded pairs, FEP insulation
						2900-462A	4 pair #22, shielded pairs, FEP insulation
						2900-392A	4 pair #22, shielded pairs, FEP insulation
						2900-342A	4 pair #22, shielded pairs, FEP insulation
						2900-282A	4 pair #22, shielded pairs, FEP insulation
						2910-7	4 pair #24, overall shielded, 30 V, PE insulation
						2900-472B	4 pair #22, shielded pairs, FEP insulation
						2900-202A	4 pair #22, shielded pairs, FEP insulation
1T46	E-118	610	152.4 mm siderail ladder tray	2757.87	38709.60	CCTVE01BD	TVL
						1474-7	50 pair #18, shielded pairs, IS/OS shield 600 V, XLPE insul., PVC jacket
						MVDSW03A	MVDS DLC
						CCTVE01BC	TVC
						1475-3B	12 Fiber, single mode fiberoptic cable
						Pull rope	Soft-Fiber Polyester
						1473-7	50 pair #18, shielded pairs, IS/OS shield 600 V, XLPE insul., PVC jacket

For continuation, see next sheet.

CONDUIT AND TRAY SCHEDULE

E-408

DATE	REVISED BY	DATE REVISED
8/02	PBP	AB

CALCULATED/DESIGNED BY — CHECKED BY

STATE OF CALIFORNIA - DEPARTMENT OF TRANSPORTATION — Caltrans

DESIGN OVERSIGHT — BEHZAD GOLEMOHAMMADI

LAST REVISION 00-00-00 — DATE PLOTTED = 5/22/2008 — TIME PLOTTED = 11:00:18 AM

FOR REDUCED PLANS ORIGINAL SCALE IS IN MILLIMETERS 0 20 40 60 80

DGN FILE = T:\13103\MS\pse\SAS Struc\CCO\SAS CC044\04-0120f1_0363R01.dgn
USERNAME = tlorico

CU 04251 — EA 0120F1

DIST	COUNTY	ROUTE	KILOMETER POST TOTAL PROJECT	SHEET NO	TOTAL SHEETS
04	SF	80	13.2/13.9	364 R1	1204

Jens Erlingsson 12/19/02
REGISTERED ELECTRICAL ENGINEER DATE

12-6-04
PLANS APPROVAL DATE

REGISTERED PROFESSIONAL ENGINEER — JENS ERLINGSSON No. 8249 Exp. 9/30/06 ELECTRICAL — STATE OF CALIFORNIA

PB POWER, Inc.
A Parsons Brinckerhoff Company
303 Second St., Suite 700N
San Francisco, CA 94107-1317

The State of California or its officers or agents shall not be responsible for the accuracy or completeness of electronic copies of this plan sheet.

Caltrans now has a web site! To get to the web site, go to http://www.dot.ca.gov

REGISTERED PROFESSIONAL ENGINEER — S. A. ESTOQUE, JR. No. E-10151 Exp. 12/31/2008 ELECTRICAL — STATE OF CALIFORNIA

FOR REVISION ONLY

REQUEST FOR INFORMATION NOT ADDRESSED IN THIS CCO REMAIN IN FORCE

MARK	DATE	DESCRIPTIONS	BY	CH'D	CCO#
		REVISIONS			
1	03/04/08	BARRIER MODIFICATIONS	JS BM	RG SE	44

CONTRACT CHANGE ORDER NO._____
SHEET_____ OF _____

CONDUIT DATA

Conduit No	Reference	Size	Type	Total Fill (mm²)	Allowable Fill (mm²)	Included Cable No.	Conductor Type
1T47	E-117	610	152.4 mm siderail ladder tray	3785.76	38709.60	Pull rope	Soft-Fiber Polyester
						MVDSW04A	MVDS DLC
						1474-7	50 pair #18, shielded pairs, IS/OS shield 600 V, XLPE insul., PVC jacket
						1473-7	50 pair #18, shielded pairs, IS/OS shield 600 V, XLPE insul., PVC jacket
						1474-8	50 pair #18, shielded pairs, IS/OS shield 600 V, XLPE insul., PVC jacket
						1475-3C	12 Fiber, single mode fiberoptic cable 1
1T48	E-118	610	152.4 mm siderail ladder tray	2157.13 1	38709.60		
						Pull rope	Soft-Fiber Polyester
						1474-8A	1 - 6 pair, shielded #18 with overall shield , 300 V, PVC jacket
						1474-8B	1 - 6 pair, shielded #18 with overall shield , 300 V, PVC jacket
						1474-10	50 pair #18, shielded pairs, IS/OS shield 600 V, XLPE insul., PVC jacket
						1474-8	50 pair #18, shielded pairs, IS/OS shield 600 V, XLPE insul., PVC jacket
						1473-10	50 pair #18, shielded pairs, IS/OS shield 600 V, XLPE insul., PVC jacket
1T49	E-128, E-19	305	152.4 mm siderail ladder tray	1849.01	19354.80	Pull rope	Soft-Fiber Polyester
						1474-4	50 pair #18, shielded pairs, IS/OS shield 600 V, XLPE insul., PVC jacket
						1475-3	72 Fiber, single mode fiberoptic riser cable
						1477-2	72 Fiber, single mode fiberoptic riser cable
1T53	E-96, E-126	610	152.4 mm siderail ladder tray	0.00	16774.16	Pull rope	Soft-Fiber Polyester
1T54	E-126	610	152.4 mm siderail ladder tray	0.00	16774.16	Pull rope	Soft-Fiber Polyester
2000	E-96	41	RGS conduit	323.69	534.55	UP104-7-1	1-2/C + gnd #8,600 V, EPR insulation
						UP104-8-2	2 + 1 gnd #8,#10, 600 V, RHH/RHW insulation
2001	E-96	53	RGS conduit	809.26	879.42	UP104-9	1-2/C + gnd #10,600 V, EPR insulation
						UP104-8	1-2/C + gnd #8,600 V, EPR insulation
						UP104-6	1-2/C + gnd #8,600 V, EPR insulation
						UP104-7	1-2/C + gnd #8,600 V, EPR insulation
2002	E-96	63	RGS conduit	905.49	1663.73	UP104-8-2	2 + 1 gnd #8,#10, 600 V, RHH/RHW insulation
						UP104-6	1-2/C + gnd #8,600 V, EPR insulation
						UP104-9	1-2/C + gnd #10,600 V, EPR insulation
						UP104-7	1-2/C + gnd #8,600 V, EPR insulation
						UP104-8	1-2/C + gnd #8,600 V, EPR insulation
2003	E-96	41	RGS conduit	192.46	534.55	UP104-9-2	2 + 1 gnd #8,#10, 600 V, RHH/RHW insulation
						UP104-6A	2 + 1 gnd #8,#10, 600 V, RHH/RHW insulation
2004	E-96	53	RGS conduit	811.22	879.42	UP104-7	1-2/C + gnd #8,600 V, EPR insulation
						UP104-8-1	3 + 1 gnd #8,#10, 600 V, RHH/RHW insulation
						UP104-8-2	2 + 1 gnd #8,#10, 600 V, RHH/RHW insulation
						UP104-9	1-2/C + gnd #10,600 V, EPR insulation
						UP104-6	1-2/C + gnd #8,600 V, EPR insulation
2005	E-96	41	RGS conduit	192.46	534.55	UP104-6b	2 + 1 gnd #8,#10, 600 V, RHH/RHW insulation
						UP104-9-1	2 + 1 gnd #8,#10, 600 V, RHH/RHW insulation
2006	E-96	53	RGS conduit	811.22	879.42	UP104-9	1-2/C + gnd #10,600 V, EPR insulation
						UP104-6	1-2/C + gnd #8,600 V, EPR insulation
						UP104-8-2	2 + 1 gnd #8,#10, 600 V, RHH/RHW insulation
						UP104-8-1	3 + 1 gnd #8,#10, 600 V, RHH/RHW insulation
						UP104-7	1-2/C + gnd #8,600 V, EPR insulation
2007	E-97	41	RGS conduit	354.34	534.55	UP104-9	1-2/C + gnd #10,600 V, EPR insulation
						UP104-6	1-2/C + gnd #8,600 V, EPR insulation
2008	E-97	53	RGS conduit	456.88	879.42	UP104-8-2	2 + 1 gnd #8,#10, 600 V, RHH/RHW insulation
						UP104-8-1	3 + 1 gnd #8,#10, 600 V, RHH/RHW insulation
						UP105-7-1	1-2/C + gnd #8,600 V, EPR insulation
2009	E-97	63	RGS conduit	909.84	1663.73	UP105-7	1-2/C + gnd #8,600 V, EPR insulation
						UP105-9	1-2/C + gnd #8,600 V, EPR insulation
						UP105-10	1-2/C + gnd #8,600 V, EPR insulation
						UP105-8	1-2/C + gnd #8,600 V, EPR insulation

CONDUIT DATA

Conduit No	Reference	Size	Type	Total Fill (mm²)	Allowable Fill (mm²)	Included Cable No.	Conductor Type
2010	E-97	63	RGS conduit	1139.26	1663.73	UP104-8-2	2 + 1 gnd #8,#10, 600 V, RHH/RHW insulation
						UP104-8-1	3 + 1 gnd #8,#10, 600 V, RHH/RHW insulation
						UP105-8	1-2/C + gnd #8,600 V, EPR insulation
						UP105-7	1-2/C + gnd #8,600 V, EPR insulation
						UP105-9	1-2/C + gnd #8,600 V, EPR insulation
						UP105-10	1-2/C + gnd #8,600 V, EPR insulation
2011	E-97	41	RGS conduit	192.46	534.55	UP105-10A	2 + 1 gnd #8,#10, 600 V, RHH/RHW insulation
						UP105-9-2	2 + 1 gnd #8,#10, 600 V, RHH/RHW insulation
2012	E-97	63	RGS conduit	911.80	1663.73	UP105-9	1-2/C + gnd #8,600 V, EPR insulation
						UP105-10	1-2/C + gnd #8,600 V, EPR insulation
						UP105-8-1	3 + 1 gnd #8,#10, 600 V, RHH/RHW insulation
						UP105-7	1-2/C + gnd #8,600 V, EPR insulation
						UP105-8-2	2 + 1 gnd #8,#10, 600 V, RHH/RHW insulation
2013	E-97	41	RGS conduit	192.46	534.55	UP105-10b	2 + 1 gnd #8,#10, 600 V, RHH/RHW insulation
						UP105-9-1	2 + 1 gnd #8,#10, 600 V, RHH/RHW insulation
2014	E-97	63	RGS conduit	911.80	1663.73	UP105-10	1-2/C + gnd #8,600 V, EPR insulation
						UP105-8-1	3 + 1 gnd #8,#10, 600 V, RHH/RHW insulation
						UP105-8-2	2 + 1 gnd #8,#10, 600 V, RHH/RHW insulation
						UP105-7	1-2/C + gnd #8,600 V, EPR insulation
						UP105-9	1-2/C + gnd #8,600 V, EPR insulation
2015	E-97	41	RGS conduit	454.92	534.55	UP105-10	1-2/C + gnd #8,600 V, EPR insulation
						UP105-9	1-2/C + gnd #8,600 V, EPR insulation
2016	E-97	63	RGS conduit	229.42	1663.73	UP105-8-1	3 + 1 gnd #8,#10, 600 V, RHH/RHW insulation
						UP105-8-2	2 + 1 gnd #8,#10, 600 V, RHH/RHW insulation
2017	E-98	63	RGS conduit	909.84	1663.73	UP106-6	1-2/C + gnd #8,600 V, EPR insulation
						UP106-8	1-2/C + gnd #8,600 V, EPR insulation
						UP106-7	1-2/C + gnd #8,600 V, EPR insulation
						UP106-9	1-2/C + gnd #8,600 V, EPR insulation
2018	E-98	63	RGS conduit	1139.26	1663.73	UP106-7	1-2/C + gnd #8,600 V, EPR insulation
						UP106-9	1-2/C + gnd #8,600 V, EPR insulation
						UP106-6	1-2/C + gnd #8,600 V, EPR insulation
						UP105-8-1	3 + 1 gnd #8,#10, 600 V, RHH/RHW insulation
						UP105-8-2	2 + 1 gnd #8,#10, 600 V, RHH/RHW insulation
						UP106-8	1-2/C + gnd #8,600 V, EPR insulation
2019	E-98	41	RGS conduit	323.69	534.55	UP106-6A	1-2/C + gnd #8,600 V, EPR insulation
						UP106-9-2	2 + 1 gnd #8,#10, 600 V, RHH/RHW insulation
2020	E-98	63	RGS conduit	911.80	1663.73	UP106-6	1-2/C + gnd #8,600 V, EPR insulation
						UP106-8-1	3 + 1 gnd #8,#10, 600 V, RHH/RHW insulation
						UP106-7	1-2/C + gnd #8,600 V, EPR insulation
						UP106-8-2	2 + 1 gnd #8,#10, 600 V, RHH/RHW insulation
						UP106-9	1-2/C + gnd #8,600 V, EPR insulation

For continuation, see next sheet.

CONDUIT AND TRAY SCHEDULE

E-409

DATE	REVISED BY	DATE REVISED
8/02	AB	8/02

CALCULATED/DESIGNED BY — PBP
CHECKED BY — AB

DESIGN OVERSIGHT — BEHZAD GOLEMOHAMMADI

STATE OF CALIFORNIA - DEPARTMENT OF TRANSPORTATION — Caltrans

LAST REVISION 00-00-00
DATE PLOTTED = 5/22/2008
TIME PLOTTED = 11:00:57 AM

FOR REDUCED PLANS ORIGINAL SCALE IS IN MILLIMETERS 0 20 40 60 80

DGN FILE = T:\13103\MS\pse\SAS Struc\CCO\SAS CC044\04-0120F1_0364R01.dgn
USERNAME = florico

CU 04251 | EA 0120F1

CONDUIT DATA

Conduit No	Reference	Size	Type	Total Fill (mm²)	Allowable Fill (mm²)	Included Cable No.	Conductor Type
2214	E-136	41	RGS conduit	0.00	534.55	Pull rope	Soft-Fiber Polyester
2215	E-136	41	RGS conduit	0.00	534.55	Pull rope	Soft-Fiber Polyester
2216	E-136	41	RGS conduit	0.00	534.55	Pull rope	Soft-Fiber Polyester
2217	E-136	41	RGS conduit	0.00	534.55	Pull rope	Soft-Fiber Polyester
2218	E-136	41	RGS conduit	0.00	534.55	Pull rope	Soft-Fiber Polyester
2219	E-137	41	RGS conduit	0.00	534.55	Pull rope	Soft-Fiber Polyester
2220	E-137	41	RGS conduit	0.00	534.55	Pull rope	Soft-Fiber Polyester
2221	E-137	41	RGS conduit	0.00	534.55	Pull rope	Soft-Fiber Polyester
2222	E-138	41	RGS conduit	0.00	534.55	Pull rope	Soft-Fiber Polyester
2223	E-138	41	RGS conduit	0.00	534.55	Pull rope	Soft-Fiber Polyester
2224	E-138	41	RGS conduit	0.00	534.55	Pull rope	Soft-Fiber Polyester
2225	E-138	41	RGS conduit	0.00	534.55	Pull rope	Soft-Fiber Polyester
2226	E-139	41	RGS conduit	0.00	534.55	Pull rope	Soft-Fiber Polyester
2227	E-139	41	RGS conduit	0.00	534.55	Pull rope	Soft-Fiber Polyester
2228	E-139	41	RGS conduit	0.00	534.55	Pull rope	Soft-Fiber Polyester
2229	E-139	41	RGS conduit	0.00	534.55	Pull rope	Soft-Fiber Polyester
2230	E-139	41	RGS conduit	0.00	534.55	Pull rope	Soft-Fiber Polyester
2231	E-140	41	RGS conduit	0.00	534.55	Pull rope	Soft-Fiber Polyester
2300	E-138	41	RGS conduit	212.85	534.55	A-2013-2	3 + 1 gnd #6,#8, 600 V RHH/RHW insulation
2301	E-138	41	RGS conduit	0.00	534.55	Pull rope	Soft-Fiber Polyester
2302	E-137	41	RGS conduit	0.00	534.55	Pull rope	Soft-Fiber Polyester
2326	E-135	41	RGS conduit	339.73	534.55	Pull rope	Soft-Fiber Polyester
						A-2011-2	3 + 1 gnd #6,#8, 600 V RHH/RHW insulation
						UP204-1	1-2/C + gnd #10, 600 V, EPR insulation
2327	E-135	41	RGS conduit	339.73	534.55	UP204-1	1-2/C + gnd #10, 600 V, EPR insulation
						A-2012-2	3 + 1 gnd #6,#8, 600 V RHH/RHW insulation
						Pull rope	Soft-Fiber Polyester
2328	E-135	41	RGS conduit	339.73	534.55	UP204-1	1-2/C + gnd #10, 600 V, EPR insulation
						Pull rope	Soft-Fiber Polyester
						S-2031-2	3 + 1 gnd #6,#8, 600 V RHH/RHW insulation
2329	E-135	41	RGS conduit	0.00	534.55	Pull rope	Soft-Fiber Polyester
2330	E-135	41	RGS conduit	212.85	534.55	A-2014-2	3 + 1 gnd #6,#8, 600 V RHH/RHW insulation
						Pull rope	Soft-Fiber Polyester
2331	E-135	41	RGS conduit	0.00	534.55	Pull rope	Soft-Fiber Polyester
2332	E-136	41	RGS conduit	0.00	534.55	Pull rope	Soft-Fiber Polyester
2333	E-136	41	RGS conduit	0.00	534.55	Pull rope	Soft-Fiber Polyester
2334	E-135	41	RGS conduit	126.88	534.55	Pull rope	Soft-Fiber Polyester
						UP205-1	1-2/C + gnd #10, 600 V, EPR insulation
2335	E-136	41	RGS conduit	339.73	534.55	A-3039-2	3 + 1 gnd #6,#8, 600 V RHH/RHW insulation
						Pull rope	Soft-Fiber Polyester
						UP205-1	1-2/C + gnd #10, 600 V, EPR insulation
2336	E-136	41	RGS conduit	339.73	534.55	Pull rope	Soft-Fiber Polyester
						UP205-1	1-2/C + gnd #10, 600 V, EPR insulation
						A-3039-2	3 + 1 gnd #6,#8, 600 V RHH/RHW insulation
2338	E-136	41	RGS conduit	0.00	534.55	Pull rope	Soft-Fiber Polyester
2339	E-136	41	RGS conduit	339.73	534.55	A-3040-2	3 + 1 gnd #6,#8, 600 V RHH/RHW insulation
						Pull rope	Soft-Fiber Polyester
						UP206-1	1-2/C + gnd #10, 600 V, EPR insulation

REQUEST FOR INFORMATION NOT ADDRESSED IN THIS CCO REMAIN IN FORCE

MARK	DATE	DESCRIPTIONS	BY	CH'D	CCO#
1	03/04/08	BARRIER MODIFICATIONS	TW	RG	44

REVISIONS

CONTRACT CHANGE ORDER NO._____
SHEET_____ OF_____

FOR REVISION ONLY

REGISTERED PROFESSIONAL ENGINEER — FADI WALIEDDINE — No. 11465 — Exp. 12/31/2009 — ELECTRICAL — STATE OF CALIFORNIA

Caltrans Metric

DIST	COUNTY	ROUTE	KILOMETER POST TOTAL PROJECT	SHEET No.	TOTAL SHEETS
04	SF	80	13.2/13.9	367 R1	1204

Jens Erlingsson 12/19/02
REGISTERED ELECTRICAL ENGINEER DATE

12-6-04
PLANS APPROVAL DATE

REGISTERED PROFESSIONAL ENGINEER — JENS ERLINGSSON — No. 8249 — Exp. 9/30/06 — ELECTRICAL — STATE OF CALIFORNIA

PB POWER, Inc.
A Parsons Brinckerhoff Company
303 Second St., Suite 700N
San Francisco, CA 94107-1317

The State of California or its officers or agents shall not be responsible for the accuracy or completeness of electronic copies of this plan sheet.

Caltrans now has a web site! To get to the web site, go to http://www.dot.ca.gov

CONDUIT DATA

Conduit No	Reference	Size	Type	Total Fill (mm²)	Allowable Fill (mm²)	Included Cable No.	Conductor Type
2340	E-137	41	RGS conduit	339.73	534.55	Pull rope	Soft-Fiber Polyester
						UP206-1	1-2/C + gnd #10, 600 V, EPR insulation
						A-3040-2	3 + 1 gnd #6,#8, 600 V RHH/RHW insulation
2341	E-137	41	RGS conduit	0.00	534.55	Pull rope	Soft-Fiber Polyester
2346	E-138	41	RGS conduit	0.00	534.55	Pull rope	Soft-Fiber Polyester
2348	E-138, E-139	41	RGS conduit	481.21	534.55	S-2031-4	3+1gnd #4,#8, 600V, RHH/RHW insulation
						Pull rope	Soft-Fiber Polyester
						A-2035-4	3 + 1 gnd #6,#8, 600 V RHH/RHW insulation
2350	E-139	41	RGS conduit	425.70	534.55	Pull rope	Soft-Fiber Polyester
						A-2035-4	3 + 1 gnd #6,#8, 600 V RHH/RHW insulation
						S-2032-2	3 + 1 gnd #6,#8, 600 V RHH/RHW insulation
2353	E-139	41	RGS conduit	425.70	534.55	S-2032-2	3 + 1 gnd #6,#8, 600 V RHH/RHW insulation
						Pull rope	Soft-Fiber Polyester
						A-2035-4	3 + 1 gnd #6,#8, 600 V RHH/RHW insulation
2355	E-140	41	RGS conduit	425.70	534.55	A-2035-4	3 + 1 gnd #6,#8, 600 V RHH/RHW insulation
						Pull rope	Soft-Fiber Polyester
						S-2032-2	3 + 1 gnd #6,#8, 600 V RHH/RHW insulation
2357	E-140	41	RGS conduit	0.00	534.55	Pull rope	Soft-Fiber Polyester
2358	E-139	41	RGS conduit	0.00	534.55	Pull rope	Soft-Fiber Polyester
2359	E-137	41	RGS conduit	126.88	534.55	UP206-1	1-2/C + gnd #10, 600 V, EPR insulation
						Pull rope	Soft-Fiber Polyester
2360	E-138	41	RGS conduit	0.00	534.55	Pull rope	Soft-Fiber Polyester
2361	E-136	41	RGS conduit	0.00	534.55	Pull rope	Soft-Fiber Polyester
2364	E-137	41	RGS conduit	212.85	534.55	LP220-2,4A	3 + 1 gnd #6,#8, 600 V RHH/RHW insulation
2368	E-135	41	RGS conduit	212.85	534.55	LP219-2,4A	3 + 1 gnd #6,#8, 600 V RHH/RHW insulation
2369	E-135	41	RGS conduit	212.85	534.55	LP219-2,4A	3 + 1 gnd #6,#8, 600 V RHH/RHW insulation
2370	E-135	41	RGS conduit	212.85	534.55	LP219-2,4A	3 + 1 gnd #6,#8, 600 V RHH/RHW insulation
2371	E-135	41	RGS conduit	212.85	534.55	LP219-6,8A	3 + 1 gnd #6,#8, 600 V RHH/RHW insulation
2372	E-135	41	RGS conduit	212.85	534.55	LP219-6,8A	3 + 1 gnd #6,#8, 600 V RHH/RHW insulation
2373	E-135	41	RGS conduit	212.85	534.55	LP219-6,8A	3 + 1 gnd #6,#8, 600 V RHH/RHW insulation
2374	E-135	41	RGS conduit	212.85	534.55	LP219-6,8A	3 + 1 gnd #6,#8, 600 V RHH/RHW insulation
2375	E-136	41	RGS conduit	0.00	534.55	Pull rope	Soft-Fiber Polyester
2376	E-136	41	RGS conduit	212.85	534.55	LP220-2,4A	3 + 1 gnd #6,#8, 600 V RHH/RHW insulation

For continuation, see next sheet.

CONDUIT AND TRAY SCHEDULE

E-412

STATE OF CALIFORNIA - DEPARTMENT OF TRANSPORTATION
Caltrans

DESIGN OVERSIGHT: BEHZAD GOLEMOHAMMADI

CALCULATED/ DESIGNED BY	DATE	REVISED BY	DATE REVISED
CHECKED BY	8/02	AB	8/02

LAST REVISION 00-00-00

DATE PLOTTED = 5/22/2008
TIME PLOTTED = 11:01:45 AM

FOR REDUCED PLANS ORIGINAL SCALE IS IN MILLIMETERS 0 20 40 60 80

DGN FILE = T:\13103\MS\pse\SAS Struc\CCO\SAS CC044\04-0120f1_0367R01.dgn
USERNAME = florico

CU 04251 | EA 0120F1

CONDUIT DATA

Conduit No	Reference	Size	Type	Total Fill (mm²)	Allowable Fill (mm²)	Included Cable No.	Conductor Type
2303	E-140	41	RGS conduit	0.00	534.55	Pull rope	Soft-Fiber Polyester
2304	E-140	41	RGS conduit	0.00	534.55	Pull rope	Soft-Fiber Polyester

REQUEST FOR INFORMATION NOT ADDRESSED IN THIS CCO REMAIN IN FORCE

MARK	DATE	DESCRIPTIONS	BY	CH'D	CCO#
0	03/04/08	BARRIER MODIFICATIONS	TW	RG	44

REVISIONS

CONTRACT CHANGE ORDER NO._____
SHEET_____ OF_____

Caltrans Metric

DIST	COUNTY	ROUTE	KILOMETER POST TOTAL PROJECT	SHEET No	TOTAL SHEETS
04	SF	80	13.2/13.9	367 S1	1204

REGISTERED ELECTRICAL ENGINEER DATE

PLANS APPROVAL DATE

REGISTERED PROFESSIONAL ENGINEER FADI WALIEDDINE No. 11465 Exp. 12/31/2009 ELECTRICAL STATE OF CALIFORNIA

PB AMERICAS, Inc.
A Parsons Brinckerhoff Company
303 Second St., Suite 700N
San Francisco, CA 94107-1317

The State of California or its officers or agents shall not be responsible for the accuracy or completeness of electronic copies of this plan sheet.

Caltrans now has a web site! To get to the web site, go to http://www.dot.ca.gov

CONDUIT DATA

Conduit No	Reference	Size	Type	Total Fill (mm²)	Allowable Fill (mm²)	Included Cable No.	Conductor Type

For continuation, see next sheet.

CONDUIT AND TRAY SCHEDULE

E-412A

STATE OF CALIFORNIA - DEPARTMENT OF TRANSPORTATION
Caltrans

DESIGN OVERSIGHT
BEHZAD GOLEMOHAMMADI

CALCULATED/DESIGNED BY PBP DATE 8/02 REVISED BY
CHECKED BY AB 8/02 DATE REVISED

LAST REVISION 00-00-00
DATE PLOTTED => 5/22/2008
TIME PLOTTED => 11:09:36 AM

FOR REDUCED PLANS ORIGINAL SCALE IS IN MILLIMETERS 0 20 40 60 80

DGN FILE =>T:\13103\MS\pse\SAS Struc\CCO\SAS CC044\04-0120f1_0367S01.dgn
USERNAME =>llorico

CU 04251

EA 0120F1

DIST	COUNTY	ROUTE	KILOMETER POST TOTAL PROJECT	SHEET NO.	TOTAL SHEETS
04	SF	80	13.2/13.9	368 R1	1204

Jens Erlingsson 12/19/02
REGISTERED ELECTRICAL ENGINEER DATE

12-6-04
PLANS APPROVAL DATE

REGISTERED PROFESSIONAL ENGINEER — JENS ERLINGSSON No. 8249 Exp. 9/30/06 ELECTRICAL — STATE OF CALIFORNIA

PB POWER, Inc.
A Parsons Brinckerhoff Company
303 Second St., Suite 700N
San Francisco, CA 94107-1317

The State of California or its officers or agents shall not be responsible for the accuracy or completeness of electronic copies of this plan sheet.

Caltrans now has a web site! To get to the web site, go to: http://www.dot.ca.gov

REQUEST FOR INFORMATION NOT ADDRESSED IN THIS CCO REMAIN IN FORCE						
MARK	DATE	REVISIONS DESCRIPTIONS	BY	CH'D	CCO#	
1	03/04/08	BARRIER MODIFICATIONS	JS BM	RG SE	44	

CONTRACT CHANGE ORDER NO._____
SHEET_____ OF _____

FOR REVISION ONLY

REGISTERED PROFESSIONAL ENGINEER — S. A. ESTOQUE, JR. No. E-10151 Exp. 12/31/2008 ELECTRICAL — STATE OF CALIFORNIA

CONDUIT DATA

Conduit No	Reference	Size	Type	Total Fill (mm2)	Allowable Fill (mm2)	Included Cable No.	Conductor Type
2377	E-136	41	RGS conduit	212.85	534.55	LP220-2,4A	3 + 1 gnd #6,#8, 600 V, RHH/RHW insulation
2378	E-136	41	RGS conduit	212.85	534.55	LP220-2,4A	3 + 1 gnd #6,#8, 600 V, RHH/RHW insulation
2379	E-136	41	RGS conduit	212.85	534.55	LP220-2,4A	3 + 1 gnd #6,#8, 600 V, RHH/RHW insulation
2380	E-136	41	RGS conduit	212.85	534.55	LP220-6,8A	3 + 1 gnd #6,#8, 600 V, RHH/RHW insulation
2381	E-136	41	RGS conduit	212.85	534.55	LP220-6,8A	3 + 1 gnd #6,#8, 600 V, RHH/RHW insulation
2382	E-136	41	RGS conduit	212.85	534.55	LP220-6,8A	3 + 1 gnd #6,#8, 600 V, RHH/RHW insulation
2383	E-136	41	RGS conduit	212.85	534.55	LP220-6,8A	3 + 1 gnd #6,#8, 600 V, RHH/RHW insulation
2384	E-136	41	RGS conduit	212.85	534.55	LP220-6,8A	3 + 1 gnd #6,#8, 600 V, RHH/RHW insulation
2385	E-136	41	RGS conduit	0.00	534.55	Pull rope	Soft-Fiber Polyester
2386	E-136	41	RGS conduit	212.85	534.55	LP221-2,4A	3 + 1 gnd #6,#8, 600 V, RHH/RHW insulation
2387	E-137	41	RGS conduit	212.85	534.55	LP221-2,4A	3 + 1 gnd #6,#8, 600 V, RHH/RHW insulation
2388	E-137	41	RGS conduit	212.85	534.55	LP221-2,4A	3 + 1 gnd #6,#8, 600 V, RHH/RHW insulation
2389	E-137	41	RGS conduit	212.85	534.55	LP221-6,8A	3 + 1 gnd #6,#8, 600 V, RHH/RHW insulation
2390	E-137	41	RGS conduit	212.85	534.55	LP221-6,8A	3 + 1 gnd #6,#8, 600 V, RHH/RHW insulation
2391	E-137	41	RGS conduit	212.85	534.55	LP221-6,8A	3 + 1 gnd #6,#8, 600 V, RHH/RHW insulation
2392	E-137	41	RGS conduit	212.85	534.55	LP221-6,8A	3 + 1 gnd #6,#8, 600 V, RHH/RHW insulation
2393	E-137	41	RGS conduit	212.85	534.55	LP221-6,8A	3 + 1 gnd #6,#8, 600 V, RHH/RHW insulation
2394	E-137	41	RGS conduit	212.85	534.55	LP221-6,8A	3 + 1 gnd #6,#8, 600 V, RHH/RHW insulation
2395	E-137	41	RGS conduit	212.85	534.55	LP221-6,8A	3 + 1 gnd #6,#8, 600 V, RHH/RHW insulation
2396	E-137	41	RGS conduit	212.85	534.55	LP222-2,4A	3 + 1 gnd #6,#8, 600 V, RHH/RHW insulation
2397	E-138	41	RGS conduit	212.85	534.55	LP222-2,4A	3 + 1 gnd #6,#8, 600 V, RHH/RHW insulation
2398	E-138	41	RGS conduit	212.85	534.55	LP222-2,4A	3 + 1 gnd #6,#8, 600 V, RHH/RHW insulation
2399	E-138	41	RGS conduit	212.85	534.55	LP222-2,4A	3 + 1 gnd #6,#8, 600 V, RHH/RHW insulation
2401	E-138	41	RGS conduit	212.85	534.55	Pull rope	Soft-Fiber Polyester
						A-2013-2	3 + 1 gnd #6,#8, 600 V, RHH/RHW insulation
2426	E-135	41	RGS conduit	212.85	534.55	LP219-2,4A	3 + 1 gnd #6,#8, 600 V, RHH/RHW insulation
						Pull rope	Soft-Fiber Polyester
2427	E-135	41	RGS conduit	212.85 (1)	534.55 (1)	Pull rope	Soft-Fiber Polyester
						LP220-2,4A	3 + 1 gnd #6,#8, 600 V, RHH/RHW insulation
2428	E-135	41	RGS conduit	425.70	534.55	Pull rope	Soft-Fiber Polyester
						A-2035-2	3 + 1 gnd #6,#8, 600 V, RHH/RHW insulation
						LP221-6,8A	3 + 1 gnd #6,#8, 600 V, RHH/RHW insulation
2429	E-136	41	RGS conduit	212.85	534.55	LP219-6,8A	3 + 1 gnd #6,#8, 600 V, RHH/RHW insulation
2430	E-138	41	RGS conduit	425.70	534.55	LP222-2,4A	3 + 1 gnd #6,#8, 600 V, RHH/RHW insulation
						LP222-6,8A	3 + 1 gnd #6,#8, 600 V, RHH/RHW insulation
2432	E-139	41	RGS conduit	425.70	534.55	LP219-2,4A	3 + 1 gnd #6,#8, 600 V, RHH/RHW insulation
						LP219-6,8A	3 + 1 gnd #6,#8, 600 V, RHH/RHW insulation
2434	E-135	41	RGS conduit	0.00	534.55	Pull rope	Soft-Fiber Polyester (1)
2435	E-136	41	RGS conduit	0.00	534.55	Pull rope	Soft-Fiber Polyester
2436	E-136	41	RGS conduit	0.00 (1)	534.55 (1)	Pull rope	Soft-Fiber Polyester
2437	E-136	41	RGS conduit	0.00	534.55	Pull rope	Soft-Fiber Polyester
2438	E-136	41	RGS conduit	0.00	534.55	Pull rope	Soft-Fiber Polyester
2439	E-136	41	RGS conduit	0.00	534.55	Pull rope	Soft-Fiber Polyester
2440	E-136	41	RGS conduit	0.00	534.55	Pull rope	Soft-Fiber Polyester

CONDUIT DATA

Conduit No	Reference	Size	Type	Total Fill (mm2)	Allowable Fill (mm2)	Included Cable No.	Conductor Type
2441	E-137	41	RGS conduit	0.00	534.55	Pull rope	Soft-Fiber Polyester
2442	E-137	41	RGS conduit	0.00	534.55	Pull rope	Soft-Fiber Polyester
2443	E-137	41	RGS conduit	0.00	534.55	Pull rope	Soft-Fiber Polyester
2444	E-137	41	RGS conduit	0.00	534.55	Pull rope	Soft-Fiber Polyester
2446	E-138	41	RGS conduit	0.00	534.55	Pull rope	Soft-Fiber Polyester
2447	E-138	41	RGS conduit	0.00	534.55	Pull rope	Soft-Fiber Polyester
2448	E-138	41	RGS conduit	0.00	534.55	Pull rope	Soft-Fiber Polyester
2449	E-139	41	RGS conduit	0.00	534.55	Pull rope	Soft-Fiber Polyester
2450	E-139	41	RGS conduit	0.00	534.55	Pull rope	Soft-Fiber Polyester
2451	E-139	41	RGS conduit	0.00	534.55	Pull rope	Soft-Fiber Polyester
2452	E-139	41	RGS conduit	0.00	534.55	Pull rope	Soft-Fiber Polyester
2453	E-139	41	RGS conduit	0.00	534.55	Pull rope	Soft-Fiber Polyester
2454	E-139	41	RGS conduit	0.00	534.55	Pull rope	Soft-Fiber Polyester
2455	E-140	41	RGS conduit	0.00	534.55	Pull rope	Soft-Fiber Polyester
2457	E-140	41	RGS conduit	0.00	534.55	Pull rope	Soft-Fiber Polyester
2459	E-139	41	RGS conduit	0.00	534.55	Pull rope	Soft-Fiber Polyester
2460	E-137	41	RGS conduit	0.00	534.55	Pull rope	Soft-Fiber Polyester
2461	E-138	41	RGS conduit	0.00	534.55	Pull rope	Soft-Fiber Polyester
2468	E-135	41	RGS conduit	212.85	534.55	A-2011-2	3 + 1 gnd #6,#8, 600 V, RHH/RHW insulation
2469	E-135	41	RGS conduit	212.85	534.55	A-2011-2	3 + 1 gnd #6,#8, 600 V, RHH/RHW insulation
2470	E-135	41	RGS conduit	212.85	534.55	A-2011-2	3 + 1 gnd #6,#8, 600 V, RHH/RHW insulation
2471	E-135	41	RGS conduit	212.85	534.55	A-2011-2	3 + 1 gnd #6,#8, 600 V, RHH/RHW insulation
2472	E-135	41	RGS conduit	212.85	534.55	A-2011-2	3 + 1 gnd #6,#8, 600 V, RHH/RHW insulation
2473	E-135	41	RGS conduit	212.85	534.55	A-2011-2	3 + 1 gnd #6,#8, 600 V, RHH/RHW insulation
2474	E-135	41	RGS conduit	212.85	534.55	A-2011-2	3 + 1 gnd #6,#8, 600 V, RHH/RHW insulation
2475	E-136	41	RGS conduit	212.85	534.55	A-2011-2	3 + 1 gnd #6,#8, 600 V, RHH/RHW insulation
2476	E-136	41	RGS conduit	212.85	534.55	A-2011-2	3 + 1 gnd #6,#8, 600 V, RHH/RHW insulation
2477	E-136	41	RGS conduit	212.85	534.55	A-2011-2	3 + 1 gnd #6,#8, 600 V, RHH/RHW insulation

For continuation, see next sheet.

CONDUIT AND TRAY SCHEDULE

E-413

DESIGN OVERSIGHT	CALCULATED/ DESIGNED BY	CHECKED BY	DRAWN BY	CHECKED BY	DATE REVISED
BEHZAD GOLEMOHAMMADI	PBP	AB	PBP	AB	8/02

STATE OF CALIFORNIA - DEPARTMENT OF TRANSPORTATION — Caltrans

LAST REVISION 00-00-00 DATE PLOTTED => 5/22/2008 TIME PLOTTED => 11:10:24 AM

FOR REDUCED PLANS ORIGINAL SCALE IS IN MILLIMETERS 0 20 40 60 80

DGN FILE => T:\13103\MS\pse\SAS Struc\CCO\SAS CC044\04-0120F1_0368R01.dgn
USERNAME => florico

CU 04251 EA 0120F1

CONDUIT DATA

Conduit No	Reference	Size	Type	Total Fill (mm²)	Allowable Fill (mm²)	Included Cable No.	Conductor Type
2478	E-136	41	RGS conduit	212.85	534.55	A-2011-2	3 + 1 gnd #6,#8, 600 V, RHH/RHW insulation
2479	E-136	41	RGS conduit	212.85	534.55	A-2011-2	3 + 1 gnd #6,#8, 600 V, RHH/RHW insulation
2480	E-136	41	RGS conduit	212.85	534.55	A-2011-2	3 + 1 gnd #6,#8, 600 V, RHH/RHW insulation
2481	E-136	41	RGS conduit	274.92	534.55	1256-7	1-3/C #16 ,600 V, EPR insulation
						A-2011-2	3 + 1 gnd #6,#8, 600 V, RHH/RHW insulation
2482	E-136	41	RGS conduit	212.85	534.55	A-2012-2	3 + 1 gnd #6,#8, 600 V, RHH/RHW insulation
2483	E-136	41	RGS conduit	212.85	534.55	A-2012-2	3 + 1 gnd #6,#8, 600 V, RHH/RHW insulation
2484	E-136	41	RGS conduit	212.85	534.55	A-2012-2	3 + 1 gnd #6,#8, 600 V, RHH/RHW insulation
2485	E-136	41	RGS conduit	212.85	534.55	A-2012-2	3 + 1 gnd #6,#8, 600 V, RHH/RHW insulation
2486	E-136	41	RGS conduit	212.85	534.55	A-2012-2	3 + 1 gnd #6,#8, 600 V, RHH/RHW insulation
2487	E-137	41	RGS conduit	212.85	534.55	A-2012-2	3 + 1 gnd #6,#8, 600 V, RHH/RHW insulation
2488	E-137	41	RGS conduit	212.85	534.55	A-2012-2	3 + 1 gnd #6,#8, 600 V, RHH/RHW insulation
2489	E-137	41	RGS conduit	212.85	534.55	A-2012-2	3 + 1 gnd #6,#8, 600 V, RHH/RHW insulation
2490	E-137	41	RGS conduit	212.85	534.55	A-2012-2	3 + 1 gnd #6,#8, 600 V, RHH/RHW insulation
2491	E-137	41	RGS conduit	212.85	534.55	A-2012-2	3 + 1 gnd #6,#8, 600 V, RHH/RHW insulation
2492	E-137	41	RGS conduit	212.85	534.55	A-2012-2	3 + 1 gnd #6,#8, 600 V, RHH/RHW insulation
2493	E-137	41	RGS conduit	212.85	534.55	A-2012-2	3 + 1 gnd #6,#8, 600 V, RHH/RHW insulation
2494	E-137	41	RGS conduit	212.85	534.55	A-2012-2	3 + 1 gnd #6,#8, 600 V, RHH/RHW insulation
2495	E-137	41	RGS conduit	212.85	534.55	A-2012-2	3 + 1 gnd #6,#8, 600 V, RHH/RHW insulation
2496	E-137	41	RGS conduit	212.85	534.55	A-2012-2	3 + 1 gnd #6,#8, 600 V, RHH/RHW insulation
2497	E-138	41	RGS conduit	0.00	534.55	Pull rope	Soft-Fiber Polyester
2498	E-138	41	RGS conduit	212.85	534.55	A-2013-2	3 + 1 gnd #6,#8, 600 V, RHH/RHW insulation
2499	E-138	41	RGS conduit	212.85	534.55	A-2013-2	3 + 1 gnd #6,#8, 600 V, RHH/RHW insulation
2511	E-135	41	RGS conduit	98.10	534.55	2155	1 - 2 pair, shielded #18 with IS/OA, 300 V, PVC jacket
						Pull rope	Soft-Fiber Polyester
2512	E-135	41	RGS conduit	0.00	534.55	Pull rope	Soft-Fiber Polyester
2513	E-136	41	RGS conduit	0.00	534.55	Pull rope	Soft-Fiber Polyester
2514	E-136	41	RGS conduit	0.00	534.55	Pull rope	Soft-Fiber Polyester
2515	E-136	41	RGS conduit	0.00	534.55	Pull rope	Soft-Fiber Polyester
2516	E-136	41	RGS conduit	1 0.00	534.55	Pull rope	Soft-Fiber Polyester 1
2517	E-136	41	RGS conduit	0.00	534.55	Pull rope	Soft-Fiber Polyester
2518	E-136	41	RGS conduit	0.00	534.55	Pull rope	Soft-Fiber Polyester
2519	E-137	41	RGS conduit	0.00	534.55	Pull rope	Soft-Fiber Polyester
2520	E-137	41	RGS conduit	0.00	534.55	Pull rope	Soft-Fiber Polyester
2521	E-137	41	RGS conduit	0.00	534.55	Pull rope	Soft-Fiber Polyester
2522	E-138	41	RGS conduit	0.00	534.55	Pull rope	Soft-Fiber Polyester
2523	E-138	41	RGS conduit	0.00	534.55	Pull rope	Soft-Fiber Polyester
2524	E-138	41	RGS conduit	0.00	534.55	Pull rope	Soft-Fiber Polyester

REQUEST FOR INFORMATION NOT ADDRESSED IN THIS CCO REMAIN IN FORCE

MARK	DATE	DESCRIPTIONS	BY	CH'D	CCO#
1	03/04/08	BARRIER MODIFICATIONS	JS BM	RG SE	44

REVISIONS

CONTRACT CHANGE ORDER NO._____
SHEET_____ OF _____

FOR REVISION ONLY

Caltrans Metric

REGISTERED PROFESSIONAL ENGINEER — S. A. ESTOOLE, JR. — No. E-10151 — Exp.12/31/2008 ELECTRICAL — STATE OF CALIFORNIA

DIST	COUNTY	ROUTE	KILOMETER POST TOTAL PROJECT	SHEET NO	TOTAL SHEETS
04	SF	80	13.2/13.9	369 R1	1204

Jens Erlingsson 12/19/02
REGISTERED ELECTRICAL ENGINEER DATE

REGISTERED PROFESSIONAL ENGINEER — JENS ERLINGSSON No. 8249 Exp. 9/30/06 ELECTRICAL — STATE OF CALIFORNIA

12-6-04
PLANS APPROVAL DATE

PB POWER, Inc.
A Parsons Brinckerhoff Company
303 Second St., Suite 700N
San Francisco, CA 94107-1317

The State of California or its officers or agents shall not be responsible for the accuracy or completeness of electronic copies of this plan sheet.

Caltrans now has a web site! To get to the web site, go to: http://www.dot.ca.gov

CONDUIT DATA

Conduit No	Reference	Size	Type	Total Fill (mm²)	Allowable Fill (mm²)	Included Cable No.	Conductor Type
2525	E-138	41	RGS conduit	0.00	534.55	Pull rope	Soft-Fiber Polyester
2526	E-139	41	RGS conduit	0.00	534.55	Pull rope	Soft-Fiber Polyester
2527	E-139	41	RGS conduit	0.00	534.55	Pull rope	Soft-Fiber Polyester
2528	E-139	41	RGS conduit	0.00	534.55	Pull rope	Soft-Fiber Polyester
2529	E-139	41	RGS conduit	0.00	534.55	Pull rope	Soft-Fiber Polyester
2530	E-139	41	RGS conduit	0.00	534.55	Pull rope	Soft-Fiber Polyester
2531	E-140	41	RGS conduit	0.00	534.55	Pull rope	Soft-Fiber Polyester
2532	E-186	41	RGS conduit	227.46	534.55	UP208-6	1-2/C + gnd #8,600 V, EPR insulation
2533	E-186	41	RGS conduit	98.10	534.55	2154	1 - 2 pair, shielded #18 with IS/OA, 300 V, PVC jacket
2535	E-199	78	RGS-PVC coated conduit	882.89	1935.24	1118	1-3/C + gnd #2/0,600 V, EPR insulation
						Pull rope	Soft-Fiber Polyester
2536	E-199	53	RGS-PVC coated conduit	147.25	879.42	1118-2	1-3/C #14,600 V, EPR insulation
						1118-1	1-3/C #16,600 V, EPR insulation
						Pull rope	Soft-Fiber Polyester
2537	E-138	41	RGS conduit	212.85	534.55	LP222-2,4A	3 + 1 gnd #6,#8, 600 V, RHH/RHW insulation 1
2538	E-138	41	RGS conduit	212.85	534.55	LP222-2,4A	3 + 1 gnd #6,#8, 600 V, RHH/RHW insulation
2539	E-138	41	RGS conduit	212.85	534.55	LP222-2,4A	3 + 1 gnd #6,#8, 600 V, RHH/RHW insulation
2540	E-138	41	RGS conduit	212.85	534.55	LP222-2,4A	3 + 1 gnd #6,#8, 600 V, RHH/RHW insulation
2541	E-138	41	RGS conduit	212.85	534.55	LP222-6,8A	3 + 1 gnd #6,#8, 600 V, RHH/RHW insulation
2542	E-138	41	RGS conduit	212.85	534.55	LP222-6,8A	3 + 1 gnd #6,#8, 600 V, RHH/RHW insulation
2543	E-138	41	RGS conduit	212.85	534.55	LP222-6,8A	3 + 1 gnd #6,#8, 600 V, RHH/RHW insulation
2544	E-138	41	RGS conduit	212.85	534.55	LP222-6,8A	3 + 1 gnd #6,#8, 600 V, RHH/RHW insulation
2545	E-138	41	RGS conduit	212.85	534.55	LP222-6,8A	3 + 1 gnd #6,#8, 600 V, RHH/RHW insulation
2546	E-138	41	RGS conduit	212.85	534.55	LP222-6,8A	3 + 1 gnd #6,#8, 600 V, RHH/RHW insulation
2547	E-139	41	RGS conduit	212.85	534.55	LP222-6,8A	3 + 1 gnd #6,#8, 600 V, RHH/RHW insulation
2548	E-139	41	RGS conduit	0.00	534.55	Pull rope	Soft-Fiber Polyester
2549	E-139	41	RGS conduit	212.85	534.55	LP223-2,4A	3 + 1 gnd #6,#8, 600 V, RHH/RHW insulation
2550	E-139	41	RGS conduit	212.85	534.55	LP223-2,4A	3 + 1 gnd #6,#8, 600 V, RHH/RHW insulation

For continuation, see next sheet.

CONDUIT AND TRAY SCHEDULE

E-414

DATE	REVISED BY	DATE REVISED
8/02	AB	8/02

CALCULATED/DESIGNED BY: PBP
CHECKED BY: AB

DESIGN OVERSIGHT: BEHZAD GOLEMOHAMMADI

STATE OF CALIFORNIA - DEPARTMENT OF TRANSPORTATION
Caltrans

LAST REVISION 00-00-00
DATE PLOTTED => 5/22/2008
TIME PLOTTED => 11:10:49 AM

FOR REDUCED PLANS ORIGINAL SCALE IS IN MILLIMETERS 0 20 40 60 80

DGN FILE = f:\l3103\ms\pse\SAS Struc\CCO\SAS CC044\04-0120f1_0369R01.dgn
USERNAME = florico

CU 04251 | EA 0120F1

CONDUIT DATA

Conduit No	Reference	Size	Type	Total Fill (mm²)	Allowable Fill (mm²)	Included Cable No.	Conductor Type
2551	E-139	41	RGS conduit	212.85	534.55	LP223-2,4A	3 + 1 gnd #6,#8, 600 V, RHH/RHW insulation
2552	E-139	41	RGS conduit	212.85	534.55	LP223-2,4A	3 + 1 gnd #6,#8, 600 V, RHH/RHW insulation
2553	E-139	41	RGS conduit	212.85	534.55	LP223-2,4A	3 + 1 gnd #6,#8, 600 V, RHH/RHW insulation
2554	E-139	41	RGS conduit	212.85	534.55	LP223-2,4A	3 + 1 gnd #6,#8, 600 V, RHH/RHW insulation
2555	E-139	41	RGS conduit	212.85	534.55	LP223-2,4A	3 + 1 gnd #6,#8, 600 V, RHH/RHW insulation
2556	E-139	41	RGS conduit	212.85	534.55	LP223-6,8A	3 + 1 gnd #6,#8, 600 V, RHH/RHW insulation
2557	E-139	41	RGS conduit	212.85	534.55	LP223-6,8A	3 + 1 gnd #6,#8, 600 V, RHH/RHW insulation
2558	E-140	41	RGS conduit	212.85	534.55	LP223-6,8A	3 + 1 gnd #6,#8, 600 V, RHH/RHW insulation
2559	E-140	41	RGS conduit	212.85	534.55	LP223-6,8A	3 + 1 gnd #6,#8, 600 V, RHH/RHW insulation
2560	E-140	41	RGS conduit	212.85	534.55	LP223-6,8A	3 + 1 gnd #6,#8, 600 V, RHH/RHW insulation
2561	E-140	41	RGS conduit	212.85	534.55	LP223-6,8A	3 + 1 gnd #6,#8, 600 V, RHH/RHW insulation
2562	E-140	41	RGS conduit	212.85	534.55	LP223-6,8A	3 + 1 gnd #6,#8, 600 V, RHH/RHW insulation
2563	E-140	41	RGS conduit	212.85	534.55	LP223-6,8A	3 + 1 gnd #6,#8, 600 V, RHH/RHW insulation
2611	E-135	41	RGS conduit	0.00	534.55	Pull rope	Soft-Fiber Polyester
2612	E-135	41	RGS conduit	0.00	534.55	Pull rope	Soft-Fiber Polyester
2613	E-135	41	RGS conduit	0.00	534.55	Pull rope	Soft-Fiber Polyester
2614	E-136	41	RGS conduit	0.00	534.55	Pull rope	Soft-Fiber Polyester
2615	E-136	41	RGS conduit	0.00	534.55	Pull rope	Soft-Fiber Polyester
2616	E-136	41	RGS conduit	0.00	534.55	Pull rope	Soft-Fiber Polyester
2617	E-136	41	RGS conduit	0.00	534.55	Pull rope	Soft-Fiber Polyester
2618	E-137	41	RGS conduit	0.00	534.55	Pull rope	Soft-Fiber Polyester
2619	E-137	41	RGS conduit	0.00	534.55	Pull rope	Soft-Fiber Polyester
2620	E-137	41	RGS conduit	0.00	534.55	Pull rope	Soft-Fiber Polyester
2621	E-137	41	RGS conduit	0.00	534.55	Pull rope	Soft-Fiber Polyester
2622	E-138	41	RGS conduit	0.00	534.55	Pull rope	Soft-Fiber Polyester
2623	E-138	41	RGS conduit	0.00	534.55	Pull rope	Soft-Fiber Polyester
2624	E-138	41	RGS conduit	0.00	534.55	Pull rope	Soft-Fiber Polyester
2625	E-138	41	RGS conduit	0.00	534.55	Pull rope	Soft-Fiber Polyester
2626	E-139	41	RGS conduit	0.00	534.55	Pull rope	Soft-Fiber Polyester
2627	E-139	41	RGS conduit	0.00	534.55	Pull rope	Soft-Fiber Polyester
2628	E-139	41	RGS conduit	0.00	534.55	Pull rope	Soft-Fiber Polyester
2629	E-139	41	RGS conduit	0.00	534.55	Pull rope	Soft-Fiber Polyester
2630	E-139	41	RGS conduit	0.00	534.55	Pull rope	Soft-Fiber Polyester
2631	E-140	41	RGS conduit	0.00	534.55	Pull rope	Soft-Fiber Polyester
2637	E-138	41	RGS conduit	212.85	534.55	Pull rope	Soft-Fiber Polyester
2638	E-138	41	RGS conduit	212.85	534.55	A-2013-2	3 + 1 gnd #6,#8, 600 V, RHH/RHW insulation
2639	E-138	41	RGS conduit	212.85	534.55	A-2013-2	3 + 1 gnd #6,#8, 600 V, RHH/RHW insulation
2640	E-138	41	RGS conduit	212.85	534.55	A-2013-2	3 + 1 gnd #6,#8, 600 V, RHH/RHW insulation
2641	E-138	41	RGS conduit	212.85	534.55	A-2013-2	3 + 1 gnd #6,#8, 600 V, RHH/RHW insulation
2642	E-138	41	RGS conduit	212.85	534.55	A-2013-2	3 + 1 gnd #6,#8, 600 V, RHH/RHW insulation

REQUEST FOR INFORMATION NOT ADDRESSED IN THIS CCO REMAIN IN FORCE

MARK	DATE	DESCRIPTIONS (REVISIONS)	BY	CH'D	CCO#
2	03/04/08	BARRIER MODIFICATIONS	JS BM	RG SE	44
1	02/19/08	ELECTRICAL MODIFICATIONS	MP EL	RR	42

CONTRACT CHANGE ORDER NO._____
SHEET____ OF ____

FOR REVISION ONLY

DIST	COUNTY	ROUTE	KILOMETER POST TOTAL PROJECT	SHEET NO	TOTAL SHEETS
04	SF	80	13.2/13.9	370 R2	1204

Jens Erlingsson 12/19/02
REGISTERED ELECTRICAL ENGINEER DATE

12-6-04
PLANS APPROVAL DATE

REGISTERED PROFESSIONAL ENGINEER — JENS ERLINGSSON No. 8249 Exp. 9/30/06 ELECTRICAL — STATE OF CALIFORNIA

PB POWER, Inc.
A Parsons Brinckerhoff Company
303 Second St., Suite 700N
San Francisco, CA 94107-1317

The State of California or its officers or agents shall not be responsible for the accuracy or completeness of electronic copies of this plan sheet.

Caltrans now has a web site! To get to the web site, go to: http://www.dot.ca.gov

REGISTERED PROFESSIONAL ENGINEER — S. A. ESTOQUE, JR. No. E-10151 Exp. 12/31/2006 ELECTRICAL — STATE OF CALIFORNIA

CONDUIT DATA

Conduit No	Reference	Size	Type	Total Fill (mm²)	Allowable Fill (mm²)	Included Cable No.	Conductor Type
2643	E-138	41	RGS conduit	212.85	534.55	A-2013-2	3 + 1 gnd #6,#8, 600 V, RHH/RHW insulation
2644	E-138	41	RGS conduit	212.85	534.55	A-2013-2	3 + 1 gnd #6,#8, 600 V, RHH/RHW insulation
2645	E-138	41	RGS conduit	212.85	534.55	A-2013-2	3 + 1 gnd #6,#8, 600 V, RHH/RHW insulation
2646	E-138	41	RGS conduit	212.85	534.55	A-2013-2	3 + 1 gnd #6,#8, 600 V, RHH/RHW insulation
2647	E-139	41	RGS conduit	212.85	534.55	A-2013-2	3 + 1 gnd #6,#8, 600 V, RHH/RHW insulation
2648	E-139	41	RGS conduit	212.85	534.55	A-2013-2	3 + 1 gnd #6,#8, 600 V, RHH/RHW insulation
2649	E-139	41	RGS conduit	212.85	534.55	A-2013-2	3 + 1 gnd #6,#8, 600 V, RHH/RHW insulation
2650	E-139	41	RGS conduit	212.85	534.55	A-2014-2	3 + 1 gnd #6,#8, 600 V, RHH/RHW insulation
2651	E-139	41	RGS conduit	212.85	534.55	A-2014-2	3 + 1 gnd #6,#8, 600 V, RHH/RHW insulation
2652	E-139	41	RGS conduit	212.85	534.55	A-2014-2	3 + 1 gnd #6,#8, 600 V, RHH/RHW insulation
2653	E-139	41	RGS conduit	212.85	534.55	A-2014-2	3 + 1 gnd #6,#8, 600 V, RHH/RHW insulation
2654	E-139	41	RGS conduit	212.85	534.55	A-2014-2	3 + 1 gnd #6,#8, 600 V, RHH/RHW insulation
2655	E-139	41	RGS conduit	212.85	534.55	A-2014-2	3 + 1 gnd #6,#8, 600 V, RHH/RHW insulation
2656	E-139	41	RGS conduit	212.85	534.55	A-2014-2	3 + 1 gnd #6,#8, 600 V, RHH/RHW insulation
2657	E-139	41	RGS conduit	212.85	534.55	A-2014-2	3 + 1 gnd #6,#8, 600 V, RHH/RHW insulation
2658	E-140	41	RGS conduit	212.85	534.55	A-2014-2	3 + 1 gnd #6,#8, 600 V, RHH/RHW insulation
2659	E-140	41	RGS conduit	212.85	534.55	A-2014-2	3 + 1 gnd #6,#8, 600 V, RHH/RHW insulation
2660	E-140	41	RGS conduit	212.85	534.55	A-2014-2	3 + 1 gnd #6,#8, 600 V, RHH/RHW insulation
2661	E-140	41	RGS conduit	212.85	534.55	A-2014-2	3 + 1 gnd #6,#8, 600 V, RHH/RHW insulation
2662	E-140	41	RGS conduit	212.85	534.55	A-2014-2	3 + 1 gnd #6,#8, 600 V, RHH/RHW insulation
2663	E-140	41	RGS conduit	212.85	534.55	A-2014-2	3 + 1 gnd #6,#8, 600 V, RHH/RHW insulation
2664	E-135	41	RGS conduit	212.85	534.55	LP219-6,8A	3 + 1 gnd #6,#8, 600 V, RHH/RHW insulation
2757	E-135	41	RGS conduit	0.00	534.55	Pull rope	Soft-Fiber Polyester
2758	E-135	41	RGS conduit, PVC Coated	227.46	534.55	Pull rope	Soft-Fiber Polyester
						UP205-6	1-2/C + gnd #8, 600 V, EPR insulation
2759	E-135	41	RGS conduit	440.31	534.55	A-3031-2	3 + 1 gnd #6,#8, 600 V, RHH/RHW insulation
						UP205-6	1-2/C + gnd #8, 600 V, EPR insulation
						Pull rope	Soft-Fiber Polyester

For continuation, see next sheet.

CONDUIT AND TRAY SCHEDULE

E-415

STATE OF CALIFORNIA - DEPARTMENT OF TRANSPORTATION
Caltrans

DESIGN OVERSIGHT: BEHZAD GOLEMOHAMMADI

DATE	REVISED BY	DATE REVISED
8/02	PBP	8/02 AB

CALCULATED/DESIGNED BY | CHECKED BY

LAST REVISION 00-00-00 | DATE PLOTTED = 5/22/2008 | TIME PLOTTED = 11:11:39 AM

FOR REDUCED PLANS ORIGINAL SCALE IS IN MILLIMETERS 0 20 40 60 80

DGN FILE = T:\13103\MS\pse\SAS Struc\CCO\SAS CCO44\04-0120f1_037OR02.dgn
USERNAME = rllorico

CU 04251 | EA 0120F1

CONDUIT DATA

Conduit No	Reference	Size	Type	Total Fill (mm²)	Allowable Fill (mm²)	Included Cable No.	Conductor Type
2760	E-135	41	RGS conduit	440.31	534.55	A-3031-2	3 + 1 gnd #6,#8, 600 V, RHH/RHW insulation
						UP205-6	1-2/C + gnd #8, 600 V, EPR insulation
						Pull rope	Soft-Fiber Polyester
2761	E-135	41	RGS conduit	425.70	534.55	LP219-2,4A	3 + 1 gnd #6,#8, 600 V, RHH/RHW insulation
						Pull rope	Soft-Fiber Polyester
						A-3031-2	3 + 1 gnd #6,#8, 600 V, RHH/RHW insulation
2762	E-135	41	RGS conduit	212.85	534.55	Pull rope	Soft-Fiber Polyester
						A-3031-2	3 + 1 gnd #6,#8, 600 V, RHH/RHW insulation
2763	E-135	41	RGS conduit	212.85	534.55	Pull rope	Soft-Fiber Polyester
						A-3031-2	3 + 1 gnd #6,#8, 600 V, RHH/RHW insulation
2764	E-135	41	RGS conduit	212.85	534.55	Pull rope	Soft-Fiber Polyester
						A-3031-2	3 + 1 gnd #6,#8, 600 V, RHH/RHW insulation
2765	E-135	41	RGS conduit	212.85	534.55	Pull rope	Soft-Fiber Polyester
						A-3031-2	3 + 1 gnd #6,#8, 600 V, RHH/RHW insulation
2766	E-136	41	RGS conduit	212.85	534.55	Pull rope	Soft-Fiber Polyester
						A-3031-2	3 + 1 gnd #6,#8, 600 V, RHH/RHW insulation
2767	E-136	41	RGS conduit	0.00	534.55	Pull rope	Soft-Fiber Polyester
2768	E-136	41	RGS conduit	212.85	534.55	Pull rope	Soft-Fiber Polyester
						A-3032-2	3 + 1 gnd #6,#8, 600 V, RHH/RHW insulation
2769	E-136	41	RGS conduit	212.85	534.55	Pull rope	Soft-Fiber Polyester
						A-3032-2	3 + 1 gnd #6,#8, 600 V, RHH/RHW insulation
2770	E-136	41	RGS conduit	212.85	534.55	Pull rope	Soft-Fiber Polyester
						A-3032-2	3 + 1 gnd #6,#8, 600 V, RHH/RHW insulation
2771	E-136	41	RGS conduit	212.85	534.55	A-3032-2	3 + 1 gnd #6,#8, 600 V, RHH/RHW insulation
						Pull rope	Soft-Fiber Polyester
2772	E-136	41	RGS conduit	212.85	534.55	Pull rope	Soft-Fiber Polyester
						A-3032-2	3 + 1 gnd #6,#8, 600 V, RHH/RHW insulation
2773	E-136	41	RGS conduit	212.85	534.55	Pull rope	Soft-Fiber Polyester
						A-3033-2	3 + 1 gnd #6,#8, 600 V, RHH/RHW insulation
2774	E-136	53	RGS conduit	537.14	681.55	Pull rope	Soft-Fiber Polyester
						A-3040-3	1-3/C + gnd #6, 600 V, EPR insulation
						A-3033-2	3 + 1 gnd #6,#8, 600 V, RHH/RHW insulation
2775	E-136	53	RGS conduit	537.14	681.55	A-3033-2	3 + 1 gnd #6,#8, 600 V, RHH/RHW insulation
						A-3040-3	1-3/C + gnd #6, 600 V, EPR insulation
						Pull rope	Soft-Fiber Polyester
2776	E-136	41	RGS conduit	212.85	534.55	A-3033-2	3 + 1 gnd #6,#8, 600 V, RHH/RHW insulation
						Pull rope	Soft-Fiber Polyester
2777	E-136	41	RGS conduit	212.85	534.55	Pull rope	Soft-Fiber Polyester
						A-3033-2	3 + 1 gnd #6,#8, 600 V, RHH/RHW insulation
2778	E-137	41	RGS conduit	212.85	534.55	Pull rope	Soft-Fiber Polyester
						A-3033-2	3 + 1 gnd #6,#8, 600 V, RHH/RHW insulation
2779	E-137	41	RGS conduit	0.00	534.55	Pull rope	Soft-Fiber Polyester
2780	E-137	41	RGS conduit	425.70	534.55	LP221-2,4A	3 + 1 gnd #6,#8, 600 V, RHH/RHW insulation
						A-3034-2	3 + 1 gnd #6,#8, 600 V, RHH/RHW insulation
						Pull rope	Soft-Fiber Polyester
2781	E-137	41	RGS conduit	212.85	534.55	Pull rope	Soft-Fiber Polyester
						A-3034-2	3 + 1 gnd #6,#8, 600 V, RHH/RHW insulation
2782	E-137	41	RGS conduit	212.85	534.55	Pull rope	Soft-Fiber Polyester
						A-3034-2	3 + 1 gnd #6,#8, 600 V, RHH/RHW insulation
2783	E-137	41	RGS conduit	212.85	534.55	Pull rope	Soft-Fiber Polyester
						A-3034-2	3 + 1 gnd #6,#8, 600 V, RHH/RHW insulation
2784	E-137	41	RGS conduit	212.85	534.55	Pull rope	Soft-Fiber Polyester
						A-3034-2	3 + 1 gnd #6,#8, 600 V, RHH/RHW insulation
2785	E-137	41	RGS conduit	0.00	534.55	Pull rope	Soft-Fiber Polyester

DIST	COUNTY	ROUTE	KILOMETER POST TOTAL PROJECT	SHEET No	TOTAL SHEETS
04	SF	80	13.2/13.9	371 R2	1204

Jens Erlingsson 12/19/02
REGISTERED ELECTRICAL ENGINEER DATE

12-6-04
PLANS APPROVAL DATE

REGISTERED PROFESSIONAL ENGINEER — JENS ERLINGSSON No. 8249 Exp. 9/30/06 ELECTRICAL — STATE OF CALIFORNIA

PB POWER, Inc.
A Parsons Brinckerhoff Company
303 Second St., Suite 700N
San Francisco, CA 94107-1317

The State of California or its officers or agents shall not be responsible for the accuracy or completeness of electronic copies of this plan sheet.

Caltrans now has a web site! To get to the web site, go to: http://www.dot.ca.gov

REQUEST FOR INFORMATION NOT ADDRESSED IN THIS CCO REMAIN IN FORCE

MARK	DATE	DESCRIPTIONS (REVISIONS)	BY	CH'D	CCO#
2	03/04/08	BARRIER MODIFICATIONS	JS BM	RG SE	44
1	02/19/08	ELECTRICAL MODIFICATIONS	MP EL	RR	42

REGISTERED PROFESSIONAL ENGINEER — S. A. ESTOQUE, JR. No. E-10151 Exp. 12/31/2008 ELECTRICAL — STATE OF CALIFORNIA

CONTRACT CHANGE ORDER NO._____
SHEET_____ OF _____

FOR REVISION ONLY

CONDUIT DATA

Conduit No	Reference	Size	Type	Total Fill (mm²)	Allowable Fill (mm²)	Included Cable No.	Conductor Type
2786	E-137	41	RGS conduit	212.85	534.55	A-3035-2	3 + 1 gnd #6,#8, 600 V, RHH/RHW insulation
						Pull rope	Soft-Fiber Polyester
2787	E-137	41	RGS conduit	212.85	534.55	Pull rope	Soft-Fiber Polyester
						A-3035-2	3 + 1 gnd #6,#8, 600 V, RHH/RHW insulation
2788	E-137	41	RGS conduit	212.85	534.55	Pull rope	Soft-Fiber Polyester
						A-3035-2	3 + 1 gnd #6,#8, 600 V, RHH/RHW insulation
2789	E-138	41	RGS conduit	212.85	534.55	Pull rope	Soft-Fiber Polyester
						A-3035-2	3 + 1 gnd #6,#8, 600 V, RHH/RHW insulation
2790	E-138	41	RGS conduit	212.85	534.55	Pull rope	Soft-Fiber Polyester
						A-3035-2	3 + 1 gnd #6,#8, 600 V, RHH/RHW insulation
2791	E-138	41	RGS conduit	0.00	534.55	Pull rope	Soft-Fiber Polyester
2792	E-138	41	RGS conduit	212.85	534.55	A-3036-2	3 + 1 gnd #6,#8, 600 V, RHH/RHW insulation
						Pull rope	Soft-Fiber Polyester
2793	E-138	41	RGS conduit	212.85	534.55	A-3036-2	3 + 1 gnd #6,#8, 600 V, RHH/RHW insulation
						Pull rope	Soft-Fiber Polyester
2794	E-138	41	RGS conduit	212.85	534.55	Pull rope	Soft-Fiber Polyester
						A-3036-2	3 + 1 gnd #6,#8, 600 V, RHH/RHW insulation
2795	E-138	41	RGS conduit	425.70	534.55	Pull rope	Soft-Fiber Polyester
						A-3036-2	3 + 1 gnd #6,#8, 600 V, RHH/RHW insulation
						LP222-2,4A	3 + 1 gnd #6,#8, 600 V, RHH/RHW insulation
2796	E-138	41	RGS conduit	212.85	534.55	Pull rope	Soft-Fiber Polyester
						A-3036-2	3 + 1 gnd #6,#8, 600 V, RHH/RHW insulation
2797	E-138	41	RGS conduit	212.85	534.55	Pull rope	Soft-Fiber Polyester
						A-3036-2	3 + 1 gnd #6,#8, 600 V, RHH/RHW insulation
2798	E-138	41	RGS conduit	212.85	534.55	A-3036-2	3 + 1 gnd #6,#8, 600 V, RHH/RHW insulation
						Pull rope	Soft-Fiber Polyester
2799	E-138	41	RGS conduit	212.85	534.55	A-3036-2	3 + 1 gnd #6,#8, 600 V, RHH/RHW insulation
						Pull rope	Soft-Fiber Polyester
2857	E-138	41	RGS conduit	0.00	534.55	Pull rope	Soft-Fiber Polyester
2858	E-135	41	RGS conduit, PVC Coated	0.00	534.55	Pull rope	Soft-Fiber Polyester
2859	E-135	41	RGS conduit	212.85	534.55	Pull rope	Soft-Fiber Polyester
						A-2011-2	3 + 1 gnd #6,#8, 600 V, RHH/RHW insulation
2860	E-135	41	RGS conduit	0.00	534.55	Pull rope	Soft-Fiber Polyester
2861	E-135	41	RGS conduit	212.85	534.55	Pull rope	Soft-Fiber Polyester
						LP219-6,8A	3 + 1 gnd #6,#8, 600 V, RHH/RHW insulation

For continuation, see next sheet.

CONDUIT AND TRAY SCHEDULE

E-416

DESIGN OVERSIGHT — BEHZAD GOLEMOHAMMADI

CALCULATED/DESIGNED BY — PBP
CHECKED BY — AB

DATE	REVISED BY	DATE REVISED
8/02		8/02

STATE OF CALIFORNIA - DEPARTMENT OF TRANSPORTATION — Caltrans

LAST REVISION 00-00-00 — DATE PLOTTED = 5/22/2008 — TIME PLOTTED = 11:12:00 AM

FOR REDUCED PLANS ORIGINAL SCALE IS IN MILLIMETERS 0 20 40 60 80

DGN FILE = T:\13103\MS\pse\SAS Struc\CCO\SAS CCO44\04-0120f1_037iR02.dgn
USERNAME = florico

CU 04251 | EA 0120F1

CONDUIT DATA

Conduit No	Reference	Size	Type	Total Fill (mm^2)	Allowable Fill (mm^2)	Included Cable No.	Conductor Type
2959	E-139	41	RGS conduit	0.00	534.55	Pull rope	Soft-Fiber Polyester
2960	E-139	41	RGS conduit	212.85	534.55	LP223-2,4A	3 + 1 gnd #6,#8, 600 V, RHH/RHW insulation
						Pull rope	Soft-Fiber Polyester
2961	E-139	41	RGS conduit	0.00	534.55	Pull rope	Soft-Fiber Polyester
2962	E-138	41	RGS conduit	0.00	534.55	Pull rope	Soft-Fiber Polyester
2963	E-138	41	RGS conduit	0.00	534.55	Pull rope	Soft-Fiber Polyester
2964	E-138	41	RGS conduit	0.00	534.55	Pull rope	Soft-Fiber Polyester
2965	E-138	41	RGS conduit	0.00	534.55	Pull rope	Soft-Fiber Polyester
2966	E-138	41	RGS conduit	0.00	534.55	Pull rope	Soft-Fiber Polyester
2967	E-138	41	RGS conduit	0.00	534.55	Pull rope	Soft-Fiber Polyester
2T13	E-181 Thru E-186	305	152.4 mm siderail ladder tray	2780.99	8387.08	Pull rope	Soft-Fiber Polyester
						2391	3-1/C #4/0 + 1/C #1/0 gnd, 15kV, EPR insulation
2T14	E-212, E-19	305	152.4 mm siderail ladder tray	2780.99	8387.08	Pull rope	Soft-Fiber Polyester
						2391	3-1/C #4/0 + 1/C #1/0 gnd, 15kV, EPR insulation
2T23	E-181 Thru E-186	760	152.4 mm siderail ladder tray	19079.92	22580.60	2202-2	1-3/C #14,600 V, EPR insulation
						A-3004-1	1-3/C + gnd #2,600 V, EPR insulation
						A-3003-1	1-3/C + gnd #4,600 V, EPR insulation
						A-2013-1	1-3/C + gnd #2,600 V, EPR insulation
						A-2012-1	1-3/C + gnd #2,600 V, EPR insulation
						2123	1-3/C + gnd #2,600 V, EPR insulation
						2202-3	1-7/C #16,600 V, EPR insulation
						2105	1-3/C + gnd #2,600 V, EPR insulation
						2106	1-3/C + gnd #2,600 V, EPR insulation
						2120-1	1-3/C #14,600 V, EPR insulation
						2120-2	1-3/C #14,600 V, EPR insulation
						2202-4	1-3/C #14,600 V, EPR insulation
						2104	1-3/C + gnd #2,600 V, EPR insulation
						2121	1-3/C + gnd #1/0,600 V, EPR insulation
						2204-1	1-3/C #16,600 V, EPR insulation
						UP204-7	1-2/C + gnd #8,600 V, EPR insulation
						2119-A	1-3/C + gnd 250 Kcmil,600 V, EPR insulation
						CCTVE01BA	TVP
						CCTVE01BB	TVCP
						CCTVE01AA	TVP
						2121-2	1-3/C #14,600 V, EPR insulation
						2201-2	1-2/C + gnd #8,600 V, EPR insulation
						2123-2	1-3/C + gnd #2/0,600 V, EPR insulation
						2123-3	1-3/C + gnd #2/0,600 V, EPR insulation
						1118	1-3/C + gnd #2/0,600 V, EPR insulation
						2095	1-3/C + gnd #2,600 V, EPR insulation
						2096	1-3/C + gnd #2,600 V, EPR insulation
						2097	1-3/C + gnd #2,600 V, EPR insulation
						2098	1-3/C + gnd #2,600 V, EPR insulation
						2099	1-3/C + gnd #2,600 V, EPR insulation
						S-3053-1	1-3/C + gnd #2,600 V, EPR insulation
						2107	1-3/C + gnd #2,600 V, EPR insulation
						2120	1-3/C + gnd #1/0,600 V, EPR insulation
						2201-6	1-2/C + gnd #8,600 V, EPR insulation
						1201-1	1-2/C + gnd #8,600 V, EPR insulation
						2202-1	1-2/C + gnd #8,600 V, EPR insulation
						2204-2	1-3/C #16,600 V, EPR insulation
						Pull rope	Soft-Fiber Polyester
						A-3041-1	1-3/C + gnd #2,600 V, EPR insulation
						S-3052-1	1-3/C + gnd #2,600 V, EPR insulation
						2125	1-3/C + gnd 250 Kcmil,600 V, EPR insulation
						2103	1-3/C + gnd #2,600 V, EPR insulation
						S-3056-9	1-4/C #14,600 V, EPR insulation
						CCTVE01AB	TVCP
						2121-1	1-3/C #14,600 V, EPR insulation
						S-3056-6	1-4/C #14,600 V, EPR insulation

REQUEST FOR INFORMATION NOT ADDRESSED IN THIS CCO REMAIN IN FORCE

MARK	DATE	DESCRIPTIONS	BY	CH'D	CCO#
1	03/04/08	BARRIER MODIFICATIONS	JS BM	RG SE	44

REVISIONS

CONTRACT CHANGE ORDER NO._____
SHEET_____ OF_____

FOR REVISION ONLY

DIST	COUNTY	ROUTE	KILOMETER POST TOTAL PROJECT	SHEET NO	TOTAL SHEETS
04	SF	80	13.2/13.9	373 R1	1204

Jens Erlingsson 12/19/02
REGISTERED ELECTRICAL ENGINEER DATE

12-6-04
PLANS APPROVAL DATE

REGISTERED PROFESSIONAL ENGINEER — JENS ERLINGSSON No. 8249 Exp. 9/30/06 ELECTRICAL — STATE OF CALIFORNIA

PB POWER, Inc.
A Parsons Brinckerhoff Company
303 Second St., Suite 700N
San Francisco, CA 94107-1317

The State of California or its officers or agents shall not be responsible for the accuracy or completeness of electronic copies of this plan sheet.

Caltrans now has a web site! To get to the web site, go to: http://www.dot.ca.gov

REGISTERED PROFESSIONAL ENGINEER — S. A. ESTOOLE, JR. No. E-10151 Exp. 12/31/2008 ELECTRICAL — STATE OF CALIFORNIA

CONDUIT DATA

Conduit No	Reference	Size	Type	Total Fill (mm^2)	Allowable Fill (mm^2)	Included Cable No.	Conductor Type
2T24	E-114, E-182	610	152.4 mm siderail ladder tray	2284.74	18064.48	LP219-2,4	1-3/C + gnd #6,600 V, EPR insulation
						LP219-6,8	1-3/C + gnd #6,600 V, EPR insulation
						Pull rope	Soft-Fiber Polyester
						UP204-7	1-2/C + gnd #8,600 V, EPR insulation
						UP204-1	1-2/C + gnd #10,600 V, EPR insulation
						UP204-8	1-2/C + gnd #8,600 V, EPR insulation
						2103	1-3/C + gnd #2,600 V, EPR insulation
						2095	1-3/C + gnd #2,600 V, EPR insulation
2T25	E-115, E-182	610	152.4 mm siderail ladder tray	3606.85	18064.48	UP205-7	1-2/C + gnd #8,600 V, EPR insulation
						UP205-1	1-2/C + gnd #10,600 V, EPR insulation
						LP220-6,8	1-3/C + gnd #6,600 V, EPR insulation
						LP220-2,4	1-3/C + gnd #6,600 V, EPR insulation
						Pull rope	Soft-Fiber Polyester
						S-3056-6	1-4/C #14,600 V, EPR insulation
						UP205-6	1-2/C + gnd #8,600 V, EPR insulation
						2202-2	1-3/C #14,600 V, EPR insulation
						2120-1	1-3/C #14,600 V, EPR insulation
						2204-2	1-3/C #16,600 V, EPR insulation
						2121-2	1-3/C #14,600 V, EPR insulation
						2096	1-3/C + gnd #2,600 V, EPR insulation
						2204-1	1-3/C #16,600 V, EPR insulation
						2104	1-3/C + gnd #2,600 V, EPR insulation
						UP205-8	1-2/C + gnd #8,600 V, EPR insulation
						2202-4	1-3/C #14,600 V, EPR insulation
						2202-3	1-7/C #16,600 V, EPR insulation
						2120-2	1-3/C #14,600 V, EPR insulation
						2121-1	1-3/C #14,600 V, EPR insulation
2T26	E-117, E-183	610	152.4 mm siderail ladder tray	3296.85	18064.48	2202-1	1-2/C + gnd #8,600 V, EPR insulation
						CCTVE01BA	TVP
						LP221-2,4	1-3/C + gnd #6,600 V, EPR insulation
						Pull rope	Soft-Fiber Polyester
						CCTVE01AB	TVCP
						CCTVE01AA	TVP
						CCTVE01BB	TVCP
						LP221-6,8	1-3/C + gnd #6,600 V, EPR insulation
						UP206-7	1-2/C + gnd #8,600 V, EPR insulation
						UP207-1	1-2/C + gnd #10,600 V, EPR insulation
						UP206-1	1-2/C + gnd #10,600 V, EPR insulation
						2202-2	1-3/C #14,600 V, EPR insulation
						2105	1-3/C + gnd #2,600 V, EPR insulation
						2097	1-3/C + gnd #2,600 V, EPR insulation
						UP206-8	1-2/C + gnd #8,600 V, EPR insulation
						2202-4	1-3/C #14,600 V, EPR insulation
						2202-3	1-7/C #16,600 V, EPR insulation

For continuation, see next sheet.

CONDUIT AND TRAY SCHEDULE

E-418

DESIGN OVERSIGHT — BEHZAD GOLEMOHAMMADI
CALCULATED/DESIGNED BY — PBP
CHECKED BY — AB
DATE REVISED — 8/02
REVISED BY — DATE

STATE OF CALIFORNIA - DEPARTMENT OF TRANSPORTATION
Caltrans

LAST REVISION 00-00-00 — DATE PLOTTED = 5/22/2008 — TIME PLOTTED = 11:12:22 AM

FOR REDUCED PLANS ORIGINAL SCALE IS IN MILLIMETERS 0 20 40 60 80

DGN FILE = T:\13103\MS\pse\SAS Struc\CCO\SAS CCO44\04-0120f1_0373R01.dgn
USERNAME = florico

CU 04251 | EA 0120F1

DIST	COUNTY	ROUTE	KILOMETER POST TOTAL PROJECT	SHEET NO	TOTAL SHEETS
04	SF	80	13.2/13.9	374 R1	1204

Jens Erlingsson 12/19/02
REGISTERED ELECTRICAL ENGINEER DATE

12-6-04
PLANS APPROVAL DATE

REGISTERED PROFESSIONAL ENGINEER — JENS ERLINGSSON No. 8249 Exp. 9/30/06 ELECTRICAL — STATE OF CALIFORNIA

PB POWER, Inc.
A Parsons Brinckerhoff Company
303 Second St., Suite 700N
San Francisco, CA 94107-1317

The State of California or its officers or agents shall not be responsible for the accuracy or completeness of electronic copies of this plan sheet.

Caltrans now has a web site! To get to the web site, go to: http://www.dot.ca.gov

REQUEST FOR INFORMATION NOT ADDRESSED IN THIS CCO REMAIN IN FORCE

MARK	DATE	DESCRIPTIONS	BY	CH'D	CCO#
		REVISIONS			
1	03/04/08	BARRIER MODIFICATIONS	JS BM	RG SE	44

CONTRACT CHANGE ORDER NO._____
SHEET_____ OF_____

REGISTERED PROFESSIONAL ENGINEER — S. A. ESTOQUE, JR. No. E-10151 Exp. 12/31/2008 ELECTRICAL — STATE OF CALIFORNIA

FOR REVISION ONLY

CONDUIT DATA

Conduit No	Reference	Size	Type	Total Fill (mm²)	Allowable Fill (mm²)	Included Cable No.	Conductor Type
2T27	E-118, E-184	610	152.4 mm siderail ladder tray	2157.86	18064.48	LP222-6,8	1-3/C + gnd #6,600 V, EPR insulation
						2098	1-3/C + gnd #2,600 V, EPR insulation
						2106	1-3/C + gnd #2,600 V, EPR insulation
						UP207-8	1-2/C + gnd #8,600 V, EPR insulation
						UP207-7	1-2/C + gnd #8,600 V, EPR insulation
						Pull rope	Soft-Fiber Polyester
						LP222-2,4	1-3/C + gnd #6,600 V, EPR insulation
2T28	E-119, E-185	610	152.4 mm siderail ladder tray	3847.88	18064.48	UP208-4	1-2/C + gnd #8,600 V, EPR insulation
						UP208-6	1-2/C + gnd #8,600 V, EPR insulation
						Pull rope	Soft-Fiber Polyester
						LP223-2,4	1-3/C + gnd #6,600 V, EPR insulation
						UP208-2	1-2/C + gnd #8,600 V, EPR insulation
						UP208-7	1-2/C + gnd #8,600 V, EPR insulation
						2107	1-3/C + gnd #2,600 V, EPR insulation
						LP223-6,8	1-3/C + gnd #6,600 V, EPR insulation
						2201-5	1-3/C #14,600 V, EPR insulation
						UP208-8	1-2/C + gnd #8,600 V, EPR insulation
						1118-1	1-3/C #14,600 V, EPR insulation
						2201-6	1-2/C + gnd #8,600 V, EPR insulation
						S-3056-9	1-4/C #14,600 V, EPR insulation
						2099	1-3/C + gnd #2,600 V, EPR insulation
						1118-2	1-3/C #16,600 V, EPR insulation
						2201-3	1-3/C #14,600 V, EPR insulation
						2201-2	1-2/C + gnd #8,600 V, EPR insulation
						2201-4	1-9/C #16,600 V, EPR insulation
2T29	E-212, E-21	610	152.4 mm siderail ladder tray	16623.79	18064.48	2123-3	1-3/C + gnd #2/0,600 V, EPR insulation
						Pull rope	Soft-Fiber Polyester
						2119-A	1-3/C + gnd 250 kcmil,600 V, EPR insulation
						2121	1-3/C + gnd #1/0,600 V, EPR insulation
						A-3004-1	1-3/C + gnd #2,600 V, EPR insulation
						A-3003-1	1-3/C + gnd #4,600 V, EPR insulation
						A-2012-1	1-3/C + gnd #2,600 V, EPR insulation
						2123	1-3/C + gnd #2,600 V, EPR insulation
						2105	1-3/C + gnd #2,600 V, EPR insulation
						2104	1-3/C + gnd #2,600 V, EPR insulation
						2125	1-3/C + gnd 250 kcmil,600 V, EPR insulation
						2123-2	1-3/C + gnd #2/0,600 V, EPR insulation
						2106	1-3/C + gnd #2,600 V, EPR insulation
						1118	1-3/C + gnd #2/0,600 V, EPR insulation
						2095	1-3/C + gnd #2,600 V, EPR insulation
						2096	1-3/C + gnd #2,600 V, EPR insulation
						2097	1-3/C + gnd #2,600 V, EPR insulation
						2098	1-3/C + gnd #2,600 V, EPR insulation
						2099	1-3/C + gnd #2,600 V, EPR insulation
						2103	1-3/C + gnd #2,600 V, EPR insulation
						2107	1-3/C + gnd #2,600 V, EPR insulation
						A-3041-1	1-3/C + gnd #2,600 V, EPR insulation
						S-3053-1	1-3/C + gnd #2,600 V, EPR insulation
						S-3052-1	1-3/C + gnd #2,600 V, EPR insulation
						2120	1-3/C + gnd #1/0,600 V, EPR insulation
						A-2013-1	1-3/C + gnd #2,600 V, EPR insulation
2T33	E-181 Thru E-186	760	152.4 mm siderail ladder tray	18689.05 (1)	22580.60	A-2011-1	1-3/C + gnd #2,600 V, EPR insulation (1)
						UP208-4	1-2/C + gnd #8,600 V, EPR insulation (1)
						UP208-6	1-2/C + gnd #8,600 V, EPR insulation
						Pull rope	Soft-Fiber Polyester
						LP219-2,4	1-3/C + gnd #6,600 V, EPR insulation
						LP219-6,8	1-3/C + gnd #6,600 V, EPR insulation
						LP220-2,4	1-3/C + gnd #6,600 V, EPR insulation
						LP220-6,8	1-3/C + gnd #6,600 V, EPR insulation
						LP221-2,4	1-3/C + gnd #6,600 V, EPR insulation
						UP205-6	1-2/C + gnd #8,600 V, EPR insulation
						A-3057-1	1-3/C + gnd #2,600 V, EPR insulation (1)
						A-2014-1	1-3/C + gnd #2,600 V, EPR insulation
						UP204-8	1-2/C + gnd #8,600 V, EPR insulation
						UP205-8	1-2/C + gnd #8,600 V, EPR insulation
						UP207-8	1-2/C + gnd #8,600 V, EPR insulation
						UP205-1	1-2/C + gnd #10,600 V, EPR insulation
						UP207-7	1-2/C + gnd #8,600 V, EPR insulation
						A-3039-3	1-3/C + gnd #6,600 V, EPR insulation
						A-3040-3	1-3/C + gnd #6,600 V, EPR insulation
						A-3005-1	1-3/C + gnd #2,600 V, EPR insulation
						A-3006-1	1-3/C + gnd #4,600 V, EPR insulation
						A-3031-1	1-3/C + gnd #4,600 V, EPR insulation

CONDUIT DATA

Conduit No	Reference	Size	Type	Total Fill (mm²)	Allowable Fill (mm²)	Included Cable No.	Conductor Type
						A-3032-1	1-3/C + gnd #4,600 V, EPR insulation
						A-3039-1	1-3/C + gnd #2,600 V, EPR insulation
						A-3040-1	1-3/C + gnd #2,600 V, EPR insulation
						LP221-6,8	1-3/C + gnd #6,600 V, EPR insulation
						UP204-1	1-2/C + gnd #10,600 V, EPR insulation
						UP206-8	1-2/C + gnd #8,600 V, EPR insulation
						S-2032-1	1-3/C + gnd #4,600 V, EPR insulation
						A-3036-1	1-3/C + gnd #4,600 V, EPR insulation
						A-2035-1	1-3/C + gnd #6,600 V, EPR insulation
						A-2035-3	1-3/C + gnd #6,600 V, EPR insulation
						UP205-7	1-2/C + gnd #8,600 V, EPR insulation
						UP206-7	1-2/C + gnd #8,600 V, EPR insulation
						LP223-2,4	1-3/C + gnd #6,600 V, EPR insulation
						LP222-6,8	1-3/C + gnd #6,600 V, EPR insulation
						A-3035-1	1-3/C + gnd #4,600 V, EPR insulation
						A-3034-1	1-3/C + gnd #2,600 V, EPR insulation
						UP208-2	1-2/C + gnd #8,600 V, EPR insulation
						UP207-1	1-2/C + gnd #10,600 V, EPR insulation
						S-2031-1	1-3/C + gnd #2,600 V, EPR insulation
						UP206-1	1-2/C + gnd #10,600 V, EPR insulation
						1118-1	1-3/C #14,600 V, EPR insulation
						1118-2	1-3/C #16,600 V, EPR insulation
						1201-2	1-2/C + gnd #8,600 V, EPR insulation
						LP223-6,8	1-3/C + gnd #6,600 V, EPR insulation
						UP208-7	1-2/C + gnd #8,600 V, EPR insulation
						LP222-2,4	1-3/C + gnd #6,600 V, EPR insulation
						1201-6	1-2/C + gnd #8,600 V, EPR insulation
						A-3043-1	1-3/C + gnd #2,600 V, EPR insulation
						A-3042-1	1-3/C + gnd #2,600 V, EPR insulation
						2119-B	1-3/C + gnd 250 kcmil,600 V, EPR insulation (1)
						A-3033-1	1-3/C + gnd #2,600 V, EPR insulation
						UP208-8	1-2/C + gnd #8,600 V, EPR insulation
2T39	E-212, E-21	610	152.4 mm siderail ladder tray	9889.17	18064.48	A-3032-1	1-3/C + gnd #4,600 V, EPR insulation
						2119-B	1-3/C + gnd 250 kcmil,600 V, EPR insulation
						A-2035-1	1-3/C + gnd #6,600 V, EPR insulation
						S-2032-1	1-3/C + gnd #4,600 V, EPR insulation
						S-2031-1	1-3/C + gnd #2,600 V, EPR insulation
						A-3036-1	1-3/C + gnd #4,600 V, EPR insulation
						A-3035-1	1-3/C + gnd #4,600 V, EPR insulation
						A-3034-1	1-3/C + gnd #2,600 V, EPR insulation
						A-3033-1	1-3/C + gnd #2,600 V, EPR insulation
						Pull rope	Soft-Fiber Polyester
						A-3039-1	1-3/C + gnd #2,600 V, EPR insulation
						A-3042-1	1-3/C + gnd #2,600 V, EPR insulation
						A-3031-1	1-3/C + gnd #4,600 V, EPR insulation
						A-3006-1	1-3/C + gnd #4,600 V, EPR insulation
						A-3005-1	1-3/C + gnd #2,600 V, EPR insulation
						A-2014-1	1-3/C + gnd #2,600 V, EPR insulation
						A-2011-1	1-3/C + gnd #2,600 V, EPR insulation
						A-3057-1	1-3/C + gnd #2,600 V, EPR insulation
						A-3043-1	1-3/C + gnd #2,600 V, EPR insulation
						A-3040-1	1-3/C + gnd #2,600 V, EPR insulation

For continuation, see next sheet.

CONDUIT AND TRAY SCHEDULE

E-419

REVISED BY | DATE REVISED
DATE 8/02 | 8/02
PBP | AB
CALCULATED/DESIGNED BY | CHECKED BY

DESIGN OVERSIGHT
BEHZAD GOLEMOHAMMADI

STATE OF CALIFORNIA - DEPARTMENT OF TRANSPORTATION
Caltrans

LAST REVISION 00-00-00
DATE PLOTTED => 5/22/2008
TIME PLOTTED => 11:12:53 AM

FOR REDUCED PLANS ORIGINAL SCALE IS IN MILLIMETERS 0 20 40 60 80

DGN FILE =>T:\T3103\MS\pse\SAS Struc\CCO\SAS CCO44\04-0120f1_0374R01.dgn
USERNAME =>tlorico

CU 04251 | EA 0120F1

DIST	COUNTY	ROUTE	KILOMETER POST TOTAL PROJECT	SHEET No	TOTAL SHEETS
04	SF	80	13.2/13.9	375 R1	1204

Jens Erlingsson 12/19/02
REGISTERED ELECTRICAL ENGINEER DATE

12-6-04
PLANS APPROVAL DATE

REGISTERED PROFESSIONAL ENGINEER — JENS ERLINGSSON No. 8249 Exp. 9/30/06 ELECTRICAL — STATE OF CALIFORNIA

PB POWER, Inc.
A Parsons Brinckerhoff Company
303 Second St., Suite 700N
San Francisco, CA 94107-1317

The State of California or its officers or agents shall not be responsible for the accuracy or completeness of electronic copies of this plan sheet.

Caltrans now has a web site! To get to the web site, go to: http://www.dot.ca.gov

REQUEST FOR INFORMATION NOT ADDRESSED IN THIS CCO REMAIN IN FORCE

MARK	DATE	DESCRIPTIONS	BY	CH'D	CCO#
		REVISIONS			
1	03/04/08	BARRIER MODIFICATIONS	JS BM	RG SE	44

CONTRACT CHANGE ORDER NO._____
SHEET_____ OF _____

REGISTERED PROFESSIONAL ENGINEER — S. A. ESTOQUE, JR. No. E-10151 Exp. 12/31/2008 ELECTRICAL — STATE OF CALIFORNIA

FOR REVISION ONLY

CONDUIT DATA

Conduit No	Reference	Size	Type	Total Fill (mm²)	Allowable Fill (mm²)	Included Cable No.	Conductor Type
2T43	E-181 Thru E-186	610	152.4 mm siderail ladder tray	10169.05 (1)	38709.60	2900-152C	4 pair #22, shielded pairs, FEP insulation
						2900-292A	4 pair #22, shielded pairs, FEP insulation
						2900-272C	4 pair #22, shielded pairs, FEP insulation
						2900-272B	4 pair #22, shielded pairs, FEP insulation
						2900-272A	4 pair #22, shielded pairs, FEP insulation
						2900-192C	4 pair #22, shielded pairs, FEP insulation
						2900-192B	4 pair #22, shielded pairs, FEP insulation
						2900-192A	4 pair #22, shielded pairs, FEP insulation
						2900-172C	4 pair #22, shielded pairs, FEP insulation
						2900-172B	4 pair #22, shielded pairs, FEP insulation
						2900-172A	4 pair #22, shielded pairs, FEP insulation
						1473-6	50 pair #18, shielded pairs, IS/OS shield 600 V, XLPE insul., PVC jacket
						2900-162A	4 pair #22, shielded pairs, FEP insulation
						2900-332C	4 pair #22, shielded pairs, FEP insulation
						2900-152B	4 pair #22, shielded pairs, FEP insulation
						2900-152A	4 pair #22, shielded pairs, FEP insulation
						2900-142A	4 pair #22, shielded pairs, FEP insulation
						2910-8	4 pair #22, shielded pairs, 300 V, PE insulation
						2119-2	4 pair #22, shielded pairs, 300 V, PE insulation
						2475-3C	12 Fiber, single mode fiberoptic cable
						MVDSE03A	MVDS DLC
						MVDSE01A	MVDS DLC
						MVDSE02A	MVDS DLC
						2149	1 - 2 pair, shielded #18 with IS/OA, 300 V, PVC jacket
						2154	1 - 2 pair, shielded #18 with IS/OA, 300 V, PVC jacket
						2900-162B	4 pair #22, shielded pairs, FEP insulation
						2900-442A	4 pair #22, shielded pairs, FEP insulation
						2474-10	50 pair #18, shielded pairs, IS/OS shield 600 V, XLPE insul., PVC jacket
						1474-6	50 pair #18, shielded pairs, IS/OS shield 600 V, XLPE insul., PVC jacket
						1473-4	50 pair #18, shielded pairs, IS/OS shield 600 V, XLPE insul., PVC jacket
						2910-7	4 pair #24, overall shielded, 300V, PE insulation
						2910-3	4 pair #22, shielded pairs, FEP insulation
						2910-2	4 pair #22, shielded pairs, FEP insulation
						2910-12	4 pair #22, shielded pairs, 300 V, PE insulation
						2910-11	1-3/C #16,600 V, EPR insulation
						2900-482A	4 pair #22, shielded pairs, FEP insulation
						2900-452B	4 pair #22, shielded pairs, FEP insulation
						2900-452A	4 pair #22, shielded pairs, FEP insulation
						2900-332A	4 pair #22, shielded pairs, FEP insulation
						2900-442B	4 pair #22, shielded pairs, FEP insulation
						2900-332B	4 pair #22, shielded pairs, FEP insulation
						2900-432A	4 pair #22, shielded pairs, FEP insulation
						2900-422B	4 pair #22, shielded pairs, FEP insulation
						2900-422A	4 pair #22, shielded pairs, FEP insulation
						2900-412C	4 pair #22, shielded pairs, FEP insulation
						2900-412B	4 pair #22, shielded pairs, FEP insulation
						2900-412A	4 pair #22, shielded pairs, FEP insulation
						2900-402A	4 pair #22, shielded pairs, FEP insulation
						2900-382C	4 pair #22, shielded pairs, FEP insulation
						2900-382B	4 pair #22, shielded pairs, FEP insulation
						2900-382A	4 pair #22, shielded pairs, FEP insulation
						2148	1 - 2 pair, shielded #18 with IS/OA, 300 V, PVC jacket
						2900-442C	4 pair #22, shielded pairs, FEP insulation
						CCTVE01AD	TVL
						1473-8	50 pair #18, shielded pairs, IS/OS shield 600 V, XLPE insul., PVC jacket
						Pull rope	Soft-Fiber Polyester
						2475-3A	12 Fiber, single mode fiberoptic cable
						2475-3B	12 Fiber, single mode fiberoptic cable
						2475-3	72 Fiber, single mode fiberoptic riser cable
						CCTVE01BC	TVC
						CCTVE01BD	TVL
						CCTVE01AC	TVC
						2900-432B	4 pair #22, shielded pairs, FEP insulation
						2155	1 - 2 pair, shielded #18 with IS/OA, 300 V, PVC jacket

CONDUIT DATA

Conduit No	Reference	Size	Type	Total Fill (mm²)	Allowable Fill (mm²)	Included Cable No.	Conductor Type
						MVDSW03A	MVDS DLC
2T44	E-115, E-182	610	152.4 mm siderail ladder tray	5109.21	38709.60	2119-2	4 pair #22, shielded pairs, 300 V, PE insulation
						1473-4	50 pair #18, shielded pairs, IS/OS shield 600 V, XLPE insul., PVC jacket
						1474-5	50 pair #18, shielded pairs, IS/OS shield 600 V, XLPE insul., PVC jacket
						1474-4	50 pair #18, shielded pairs, IS/OS shield 600 V, XLPE insul., PVC jacket
						Pull rope	Soft-Fiber Polyester
						MVDSE01A	MVDS DLC
						2475-3A	12 Fiber, single mode fiberoptic cable
						1473-5	50 pair #18, shielded pairs, IS/OS shield 600 V, XLPE insul., PVC jacket
2T45	E-115, E-182	610	152.4 mm siderail ladder tray	7529.12 (1)	38709.60	2900-432B	4 pair #22, shielded pairs, FEP insulation
						2910-12	4 pair #22, shielded pairs, 300 V, PE insulation
						Pull rope	Soft-Fiber Polyester
						2900-412A	4 pair #22, shielded pairs, FEP insulation
						2910-11	1-3/C #16,600 V, EPR insulation
						2910-7	4 pair #24, overall shielded, 30V, PE insulation
						2910-10	4 pair #22, shielded pairs, 300 V, PE insulation
						2910-8	4 pair #22, shielded pairs, 300 V, PE insulation
						2900-422B	4 pair #22, shielded pairs, FEP insulation
						2900-422A	4 pair #22, shielded pairs, FEP insulation
						2900-412C	4 pair #22, shielded pairs, FEP insulation
						2900-412B	4 pair #22, shielded pairs, FEP insulation
						2900-382C	4 pair #22, shielded pairs, FEP insulation
						2900-402A	4 pair #22, shielded pairs, FEP insulation
						2900-272C	4 pair #22, shielded pairs, FEP insulation
						2900-382B	4 pair #22, shielded pairs, FEP insulation
						2900-382A	4 pair #22, shielded pairs, FEP insulation
						2900-332C	4 pair #22, shielded pairs, FEP insulation
						2900-332B	4 pair #22, shielded pairs, FEP insulation
						2900-332A	4 pair #22, shielded pairs, FEP insulation
						2900-292A	4 pair #22, shielded pairs, FEP insulation
						2900-172A	4 pair #22, shielded pairs, FEP insulation
						2900-192B	4 pair #22, shielded pairs, FEP insulation
						2900-142A	4 pair #22, shielded pairs, FEP insulation
						1474-5A	1 - 6 pair, shielded #18 with overall shield, 300 V, PVC jacket
						2910-3	4 pair #22, shielded pairs, FEP insulation
						2910-2	4 pair #22, shielded pairs, FEP insulation
						2900-482A	4 pair #22, shielded pairs, FEP insulation
						2900-452B	4 pair #22, shielded pairs, FEP insulation
						2155	1 - 2 pair, shielded #18 with IS/OA, 300 V, PVC jacket

For continuation, see next sheet.

CONDUIT AND TRAY SCHEDULE

E-420

STATE OF CALIFORNIA - DEPARTMENT OF TRANSPORTATION
Caltrans

DESIGN OVERSIGHT
BEHZAD GOLEMOHAMMADI

	CALCULATED/ DESIGNED BY	DATE	REVISED BY
	CHECKED BY	8/02	DATE REVISED
	AB	PBP	

LAST REVISION 00-00-00
DATE PLOTTED => 5/22/2008
TIME PLOTTED => 11:13:19 AM

FOR REDUCED PLANS ORIGINAL SCALE IS IN MILLIMETERS 0 20 40 60 80

DGN FILE => T:\13103\MS\pse\SAS Struc\CCO\SAS CC044\04-0120F1_0375R01.dgn
USERNAME => llorico

CU 04251 EA 0120F1

DIST	COUNTY	ROUTE	KILOMETER POST TOTAL PROJECT	SHEET NO	TOTAL SHEETS
04	SF	80	13.2/13.9	376 R1	1204

Jens Erlingsson 12/19/02
REGISTERED ELECTRICAL ENGINEER DATE

12-6-04
PLANS APPROVAL DATE

REGISTERED PROFESSIONAL ENGINEER — JENS ERLINGSSON No. 8249 Exp. 9/30/06 ELECTRICAL — STATE OF CALIFORNIA

PB POWER, Inc.
A Parsons Brinckerhoff Company
303 Second St., Suite 700N
San Francisco, CA 94107-1317

The State of California or its officers or agents shall not be responsible for the accuracy or completeness of electronic copies of this plan sheet.

Caltrans now has a web site! To get to the web site, go to: http://www.dot.ca.gov

REQUEST FOR INFORMATION NOT ADDRESSED IN THIS CCO REMAIN IN FORCE

MARK	DATE	DESCRIPTIONS	BY	CH'D	CCO#
		REVISIONS			
1	03/04/08	BARRIER MODIFICATIONS	JS BM	RG SE	44

CONTRACT CHANGE ORDER NO._____
SHEET_____ OF_____

REGISTERED PROFESSIONAL ENGINEER — S. A. ESTOQUE, JR. No. E-10151 Exp. 12/31/2008 ELECTRICAL — STATE OF CALIFORNIA

FOR REVISION ONLY

CONDUIT DATA

Conduit No	Reference	Size	Type	Total Fill (mm²)	Allowable Fill (mm²)	Included Cable No.	Conductor Type
						2900-452A	4 pair #22, shielded pairs, FEP insulation
						2900-442A	4 pair #22, shielded pairs, FEP insulation
						2900-442C	4 pair #22, shielded pairs, FEP insulation
						2900-442B	4 pair #22, shielded pairs, FEP insulation
						2900-272A	4 pair #22, shielded pairs, FEP insulation
						2900-162A	4 pair #22, shielded pairs, FEP insulation
						2900-192C	4 pair #22, shielded pairs, FEP insulation
						1474-5	50 pair #18, shielded pairs, IS/OS shield 600 V, XLPE insul., PVC jacket
						2900-432A	4 pair #22, shielded pairs, FEP insulation
						2900-192A	4 pair #22, shielded pairs, FEP insulation
						2900-172C	4 pair #22, shielded pairs, FEP insulation
						2900-172B	4 pair #22, shielded pairs, FEP insulation
						2900-162B	4 pair #22, shielded pairs, FEP insulation
						2900-152C	4 pair #22, shielded pairs, FEP insulation
						2900-152B	4 pair #22, shielded pairs, FEP insulation
						2900-152A	4 pair #22, shielded pairs, FEP insulation
						1474-5B	1 - 6 pair, shielded #18 with overall shield, 300 V, PVC jacket
						1474-6	50 pair #18, shielded pairs, IS/OS shield 600 V, XLPE insul., PVC jacket
						1473-5	50 pair #18, shielded pairs, IS/OS shield 600 V, XLPE insul., PVC jacket
						1473-6	50 pair #18, shielded pairs, IS/OS shield 600 V, XLPE insul., PVC jacket
						2900-272B	4 pair #22, shielded pairs, FEP insulation
2T46	E-115, E-183	610	152.4 mm siderail ladder tray	5485.55	38709.60	1474-6	50 pair #18, shielded pairs, IS/OS shield 600 V, XLPE insul., PVC jacket
						Pull rope	Soft-Fiber Polyester
						MVDSE02A	MVDS DLC
						CCTVE01AD	TVL
						CCTVE01AC	TVC
						MVDSW03A	MVDS DLC
						CCTVE01BD	TVL
						CCTVE01BC	TVC
						1473-7	50 pair #18, shielded pairs, IS/OS shield 600 V, XLPE insul., PVC jacket
						1474-7	50 pair #18, shielded pairs, IS/OS shield 600 V, XLPE insul., PVC jacket
						1473-6	50 pair #18, shielded pairs, IS/OS shield 600 V, XLPE insul., PVC jacket
						2475-3B	12 Fiber, single mode fiberoptic cable
2T47	E-117, E-184	610	152.4 mm siderail ladder tray	4987.47	38709.60	1474-7	50 pair #18, shielded pairs, IS/OS shield 600 V, XLPE insul., PVC jacket
						MVDSE03A	MVDS DLC
						2475-3C	12 Fiber, single mode fiberoptic cable
						1473-8	50 pair #18, shielded pairs, IS/OS shield 600 V, XLPE insul., PVC jacket
						1473-7	50 pair #18, shielded pairs, IS/OS shield 600 V, XLPE insul., PVC jacket
						1474-8	50 pair #18, shielded pairs, IS/OS shield 600 V, XLPE insul., PVC jacket
						Pull rope	Soft-Fiber Polyester
2T48	E-118, E-185	610	152.4 mm siderail ladder tray	6718.75 (1)	38709.60	Pull rope	Soft-Fiber Polyester
						1474-10	50 pair #18, shielded pairs, IS/OS shield 600 V, XLPE insul., PVC jacket
						1474-8A	1 - 6 pair, shielded #18 with overall shield, 300 V, PVC jacket
						1474-8B	1 - 6 pair, shielded #18 with overall shield, 300 V, PVC jacket
						1474-8	50 pair #18, shielded pairs, IS/OS shield 600 V, XLPE insul., PVC jacket
						2154	1 - 2 pair, shielded #18 with IS/OA, 300 V, PVC jacket
						2148	1 - 2 pair, shielded #18 with IS/OA, 300 V, PVC jacket (1)
						2149	1 - 2 pair, shielded #18 with IS/OA, 300 V, PVC jacket
						1473-10	50 pair #18, shielded pairs, IS/OS shield 600 V, XLPE insul., PVC jacket
						1473-8	50 pair #18, shielded pairs, IS/OS shield 600 V, XLPE insul., PVC jacket
						2474-10	50 pair #18, shielded pairs, IS/OS shield 600 V, XLPE insul., PVC jacket
						2150	1 - 2 pair, shielded #18 with IS/OA, 300 V, PVC jacket (1)

CONDUIT DATA

Conduit No	Reference	Size	Type	Total Fill (mm²)	Allowable Fill (mm²)	Included Cable No.	Conductor Type
2T49	E-212,E-20	305	152.4 mm siderail ladder tray	1904.72	19354.80	Pull rope	Soft-Fiber Polyester
						2900-152A	4 pair #22, shielded pairs, FEP insulation
						2900-152C	4 pair #22, shielded pairs, FEP insulation
						2900-162A	4 pair #22, shielded pairs, FEP insulation
						2900-162B	4 pair #22, shielded pairs, FEP insulation
						2910-2	4 pair #22, shielded pairs, FEP insulation
						2910-3	4 pair #22, shielded pairs, FEP insulation
						1473-4	50 pair #18, shielded pairs, IS/OS shield 600 V, XLPE insul., PVC jacket
						2475-3	72 Fiber, single mode fiberoptic riser cable
						2900-152B	4 pair #22, shielded pairs, FEP insulation
						2900-142A	4 pair #22, shielded pairs, FEP insulation
2T53	E-181 Thru E-186	610	152.4 mm siderail ladder tray	0.00	38709.60	Pull rope	Soft-Fiber Polyester
2T54	E-212,E-20	610	152.4 mm siderail ladder tray	0.00	16774.16	Pull rope	Soft-Fiber Polyester
3000		41	RGS conduit	323.69	534.55	UP204-8-2	2 + 1gnd #8,#10, 600 V, RHH/RHW insulation
						UP204-7-1	1-2/C + gnd #8,600 V, EPR insulation
3001		41	RGS conduit	454.92	534.55	UP204-7	1-2/C + gnd #8,600 V, EPR insulation
						UP204-8	1-2/C + gnd #8,600 V, EPR insulation
3002		53	RGS conduit	684.34	879.42	UP204-7	1-2/C + gnd #8,600 V, EPR insulation
						UP205-7-1	1-2/C + gnd #8,600 V, EPR insulation
						UP204-8-2	2 + 1gnd #8,#10, 600 V, RHH/RHW insulation
						UP204-8-1	3 + 1gnd #8,#10, 600 V, RHH/RHW insulation
3003		41	RGS conduit	454.92	534.55	UP205-8	1-2/C + gnd #8,600 V, EPR insulation
						UP205-7	1-2/C + gnd #8,600 V, EPR insulation
3004		53	RGS conduit	684.34	879.42	UP205-8-2	2 + 1gnd #8,#10, 600 V, RHH/RHW insulation
						UP205-8-1	3 + 1gnd #8,#10, 600 V, RHH/RHW insulation
						UP206-7-1	1-2/C + gnd #8,600 V, EPR insulation
						UP205-7	1-2/C + gnd #8,600 V, EPR insulation
3005		41	RGS conduit	454.92	534.55	UP206-8	1-2/C + gnd #8,600 V, EPR insulation
						UP206-7	1-2/C + gnd #8,600 V, EPR insulation
3006		53	RGS conduit	684.34	879.42	UP206-7	1-2/C + gnd #8,600 V, EPR insulation
						UP207-7-1	1-2/C + gnd #8,600 V, EPR insulation
						UP206-8-1	3 + 1gnd #8,#10, 600 V, RHH/RHW insulation
						UP206-8-2	2 + 1gnd #8,#10, 600 V, RHH/RHW insulation
3007		41	RGS conduit	454.92	534.55	UP207-8	1-2/C + gnd #8,600 V, EPR insulation
						UP207-7	1-2/C + gnd #8,600 V, EPR insulation
3008		53	RGS conduit	684.34	879.42	UP207-8-2	2 + 1gnd #8,#10, 600 V, RHH/RHW insulation
						UP207-8-1	3 + 1gnd #8,#10, 600 V, RHH/RHW insulation
						UP207-7	1-2/C + gnd #8,600 V, EPR insulation
						UP208-7-1	1-2/C + gnd #8,600 V, EPR insulation
3009		41	RGS conduit	454.92	534.55	UP208-8	1-2/C + gnd #8,600 V, EPR insulation
						UP208-7	1-2/C + gnd #8,600 V, EPR insulation

For continuation, see next sheet.

CONDUIT AND TRAY SCHEDULE

E-421

DATE	REVISED BY	DATE REVISED
8/02	PBP	8/02 AB

CALCULATED/DESIGNED BY
CHECKED BY

DESIGN OVERSIGHT
BEHZAD GOLEMOHAMMADI

STATE OF CALIFORNIA - DEPARTMENT OF TRANSPORTATION
Caltrans

LAST REVISION 00-00-00
DATE PLOTTED = 5/22/2008
TIME PLOTTED = 11:13:41 AM

FOR REDUCED PLANS ORIGINAL SCALE IS IN MILLIMETERS 0 20 40 60 80

DGN FILE = T:\13103\MS\pse\SAS Struc\CCO\SAS CCO44\04-0120F1_0376R01.dgn
USERNAME = florico

CU 04251 | EA 0120F1

CONDUIT DATA

Conduit No	Reference	Size	Type	Total Fill (mm²)	Allowable Fill (mm²)	Included Cable No.	Conductor Type
3702	E-284, E-275	78	RGS-PVC coated conduit	436.32	1935.24	UP210-1B-1B	2 + 1 gnd #8,#10, 600 V, RHH/RHW insulation
						UP210-1B-2	2 + 1 gnd #12,#12, 600 V, RHH/RHW insulation
						Pull rope	Soft-Fiber Polyester
3703	E-284	53	RGS-PVC coated conduit	725.01	879.42	UP210-1B-3	2 + 1 gnd #8,#10, 600 V, RHH/RHW insulation
						UP210-1B-4	2 + 1 gnd #12,#12, 600 V, RHH/RHW insulation
						Pull rope	Soft-Fiber Polyester
						UP210-1B-3C	2 + 1 gnd #8,#10, 600 V, RHH/RHW insulation
3704	E-284, E-285	53	RGS-PVC coated conduit	436.32	879.42	UP210-1B-4	2 + 1 gnd #12,#12, 600 V, RHH/RHW insulation
						UP210-1B-3C	2 + 1 gnd #8,#10, 600 V, RHH/RHW insulation
						UP210-1B-3A	2 + 1 gnd #8,#10, 600 V, RHH/RHW insulation
						Pull rope	Soft-Fiber Polyester
3705	E-284, E-275	53	RGS-PVC coated conduit	315.59	879.42	UP210-1B-3B	2 + 1 gnd #8,#10, 600 V, RHH/RHW insulation
						UP210-1B-4	2 + 1 gnd #12,#12, 600 V, RHH/RHW insulation
						Pull rope	Soft-Fiber Polyester
						UP210-1B-3C	2 + 1 gnd #8, #10, 600 V, RHH/RHW insulation
3706	E-284, E-275	53	RGS-PVC coated conduit	241.67	879.42	UP210-1B-5	2 + 1 gnd #8, #10, 600 V, RHH/RHW insulation
						UP210-1B-5C	2 + 1 gnd #8, #10, 600 V, RHH/RHW insulation
						UP210-1B-6	2 + 1 gnd #12, #12, 600 V, RHH/RHW insulation
3707	E-284, E-275	53	RGS-PVC coated conduit	241.67	879.42	UP210-1B-6	2 + 1 gnd #12, #12 600 V, RHH/RHW insulation
						UP210-1B-5A	2 + 1 gnd #8, #10, 600 V, RHH/RHW insulation
						UP210-1B-5C	2 + 1 gnd #8, #10, 600 V, RHH/RHW insulation
3708	E-284, E-275	53	RGS-PVC coated conduit	241.67	879.42	UP210-1B-5B	2 + 1 gnd #8, #10, 600 V, RHH/RHW insulation
						UP210-1B-5C	2 + 1 gnd #8, #10, 600 V, RHH/RHW insulation
						UP210-1B-6	2 + 1 gnd #12, #12, 600 V, RHH/RHW insulation
3800	E-284, E-275	53	RGS-PVC coated conduit	387.11	879.42	UP210-1B-8	2 + 1 gnd #12,#12, 600 V, RHH/RHW insulation
						Pull rope	Soft-Fiber Polyester
						UP210-1B-7	2 + 1 gnd #8,#10, 600 V, RHH/RHW insulation
						UP210-1B-7C	2 + 1 gnd #8,#10, 600 V, RHH/RHW insulation
3801	E-284	53	RGS-PVC coated conduit	483.34	879.42	UP210-1B-8	2 + 1 gnd #12,#12, 600 V, RHH/RHW insulation
						Pull rope	Soft-Fiber Polyester
						UP210-1B-7A	2 + 1 gnd #8,#10, 600 V, RHH/RHW insulation
						UP210-1B-7C	2 + 1 gnd #8,#10, 600 V, RHH/RHW insulation
3802	E-284, E-275	78	RGS-PVC coated conduit	436.32	1935.24	Pull rope	Soft-Fiber Polyester
						UP210-1B-8	2 + 1 gnd #12,#12, 600 V, RHH/RHW insulation
						UP210-1B-7C	2 + 1 gnd #8,#10, 600 V, RHH/RHW insulation
						UP210-1B-7B	2 + 1 gnd #8,#10, 600 V, RHH/RHW insulation
3803	E-284, E-275	53	RGS-PVC coated conduit	725.01	879.42	UP210-1B-10	2 + 1 gnd #12,#12, 600 V, RHH/RHW insulation
						Pull rope	Soft-Fiber Polyester
						UP210-1B-9	2 + 1 gnd #8,#10, 600 V, RHH/RHW insulation
						UP210-1B-9C	2 + 1 gnd #8,#10, 600 V, RHH/RHW insulation
3804	E-284, E-285	78	RGS-PVC coated conduit	436.32	1935.24	Pull rope	Soft-Fiber Polyester
						UP210-1B-10	2 + 1 gnd #12,#12, 600 V, RHH/RHW insulation
						UP210-1B-9A	2 + 1 gnd #8,#10, 600 V, RHH/RHW insulation
						UP210-1B-9C	2 + 1 gnd #8,#10, 600 V, RHH/RHW insulation
3805	E-284, E-275	53	RGS-PVC coated conduit	337.90	879.42	UP210-1B-10	2 + 1 gnd #12,#12, 600 V, RHH/RHW insulation
						Pull rope	Soft-Fiber Polyester
						UP210-1B-9B	2 + 1 gnd #8,#10, 600 V, RHH/RHW insulation
						UP210-1B-9C	2 + 1 gnd #8,#10, 600 V, RHH/RHW insulation
3806	E-284, E-275	53	RGS-PVC coated conduit	241.67	879.42	UP210-1B-12	2 + 1 gnd #12, #12, 600 V, RHH/RHW insulation
						UP210-1B-11	2 + 1 gnd #8, #10, 600 V, RHH/RHW insulation
						UP210-1B-11C	2 + 1 gnd #8, #10, 600 V, RHH/RHW insulation
3807	E-284, E-275	53	RGS-PVC coated conduit	241.67	879.42	UP210-1B-11A	2 + 1 gnd #8, #10, 600 V, RHH/RHW insulation
						UP210-1B-11C	2 + 1 gnd #8, #10, 600 V, RHH/RHW insulation
						UP210-1B-12	2 + 1 gnd #12, #12, 600 V, RHH/RHW insulation

REQUEST FOR INFORMATION NOT ADDRESSED IN THIS CCO REMAIN IN FORCE

MARK	DATE	DESCRIPTIONS	BY	CH'D	CCO#
		REVISIONS			
1	03/04/08	BARRIER MODIFICATIONS	JS BM	RG SE	44

CONTRACT CHANGE ORDER NO._____
SHEET_____ OF _____

FOR REVISION ONLY

DIST	COUNTY	ROUTE	KILOMETER POST TOTAL PROJECT	SHEET No.	TOTAL SHEETS
04	SF	80	13.2/13.9	386 R1	1204

REGISTERED ELECTRICAL ENGINEER — 12/19/02 DATE

12-6-04
PLANS APPROVAL DATE

REGISTERED PROFESSIONAL ENGINEER — JENS ERLINGSSON No. 8249 Exp. 9/30/06 ELECTRICAL — STATE OF CALIFORNIA

PB POWER, Inc.
A Parsons Brinckerhoff Company
303 Second St., Suite 700N
San Francisco, CA 94107-1317

The State of California or its officers or agents shall not be responsible for the accuracy or completeness of electronic copies of this plan sheet.

Caltrans now has a web site! To get to the web site, go to http://www.dot.ca.gov

REGISTERED PROFESSIONAL ENGINEER — S. A. ESTOQUE, JR. No. E-10151 Exp. 12/31/2008 ELECTRICAL — STATE OF CALIFORNIA

CONDUIT DATA

Conduit No	Reference	Size	Type	Total Fill (mm²)	Allowable Fill (mm²)	Included Cable No.	Conductor Type
3808	E-284, E-275	53	RGS-PVC coated conduit	241.67	879.42	UP210-1B-12	2 + 1 gnd #12, #12, 600 V, RHH/RHW insulation
						UP210-1B-11B	2 + 1 gnd #8, #10, 600 V, RHH/RHW insulation
						UP210-1B-11C	2 + 1 gnd #8, #10, 600 V, RHH/RHW insulation
4007	E-114	53	RGS-PVC coated conduit	150.44	879.42	Pull rope	Soft-Fiber Polyester
						MVDSW02A	MVDS DLC
4009	E-71	53	RGS-PVC coated conduit	60.80	879.42	Pull rope	Soft-Fiber Polyester
						UP104-5	2 + 1 gnd #10,#10, 600 V, RHH/RHW insulation
4010	E-71	53	RGS-PVC coated conduit	98.42	879.42	UP104-12	2 + 1 gnd #12,#12, 600 V, RHH/RHW insulation
						Pull rope	Soft-Fiber Polyester
						UP104-10	2 + 1 gnd #12,#12, 600 V, RHH/RHW insulation
4011	E-71	53	RGS-PVC coated conduit	0.00	879.42	Pull rope	Soft-Fiber Polyester
4029	E-72	78	RGS-PVC coated conduit	1217.21	1935.24	1201-5	1-3/C #14,600 V, EPR insulation
						UP105-15	1-2/C + gnd #8,600 V, EPR insulation
						Pull rope	Soft-Fiber Polyester
						1201-4	1-9/C #16,600 V, EPR insulation
						1201-3	1-3/C #14,600 V, EPR insulation
						1201-1	1-2/C + gnd #8,600 V, EPR insulation
						1201-6	1-2/C + gnd #8,600 V, EPR insulation
						1201-2	1-2/C + gnd #8,600 V, EPR insulation
4032	E-115	78	RGS-PVC coated conduit	317.80 (1)	1935.24	Pull rope	Soft-Fiber Polyester
						1474-5B	1 - 6 pair, shielded #18 with overall shield , 300 V, PVC jacket (1)
						1474-5A	1 - 6 pair, shielded #18 with overall shield , 300 V, PVC jacket
4033	E-72	53	RGS-PVC coated conduit	481.89	879.42	Pull rope	Soft-Fiber Polyester
						UP105-5	2 + 1 gnd #12,#12, 600 V, RHH/RHW insulation
						UP105-13	1-2/C + gnd #12,600 V, EPR insulation
						UP105-11	1-2/C + gnd #12,600 V, EPR insulation
						UP105-15	1-2/C + gnd #8,600 V, EPR insulation
4034	E-72	53	RGS-PVC coated conduit	0.00 (1)	879.42	Pull rope	Soft-Fiber Polyester (1)
4035	E-72	53	RGS-PVC coated conduit	0.00	879.42	Pull rope	Soft-Fiber Polyester
4036	E-73	53	RGS-PVC coated conduit	276.67	879.42	UP106-5	2 + 1 gnd #12,#12, 600 V, RHH/RHW insulation
						UP106-15	1-2/C + gnd #8,600 V, EPR insulation
						Pull rope	Soft-Fiber Polyester

For continuation, see next sheet.

CONDUIT AND TRAY SCHEDULE

E-431

DESIGN OVERSIGHT — BEHZAD GOLEMOHAMMADI
CALCULATED/DESIGNED BY — PBP
CHECKED BY — AB
DATE REVISED — 8/02
REVISED BY — DATE

STATE OF CALIFORNIA - DEPARTMENT OF TRANSPORTATION — Caltrans

LAST REVISION 00-00-00 — DATE PLOTTED = 5/22/2008 — TIME PLOTTED = 11:14:03 AM

FOR REDUCED PLANS ORIGINAL SCALE IS IN MILLIMETERS 0 20 40 60 80

DGN FILE = T:\13103\MS\pse\SAS Struc\CCO\SAS CC044\04-0120F1_038GR01.dgn
USERNAME = tlorico

CU 04251 | EA 0120F1

DIST	COUNTY	ROUTE	KILOMETER POST TOTAL PROJECT	SHEET No	TOTAL SHEETS
04	SF	80	13.2/13.9	387 R1	1204

Jens Erlingsson 12/19/02
REGISTERED ELECTRICAL ENGINEER DATE

12-6-04
PLANS APPROVAL DATE

REGISTERED PROFESSIONAL ENGINEER JENS ERLINGSSON No. 8249 Exp. 9/30/06 ELECTRICAL STATE OF CALIFORNIA

PB POWER, Inc.
A Parsons Brinckerhoff Company
303 Second St., Suite 700N
San Francisco, CA 94107-1317

The State of California or its officers or agents shall not be responsible for the accuracy or completeness of electronic copies of this plan sheet.

Caltrans now has a web site! To get to the web site, go to http://www.dot.ca.gov

REGISTERED PROFESSIONAL ENGINEER S. A. ESTOQUE, JR. No. E-10151 Exp. 12/31/2008 ELECTRICAL STATE OF CALIFORNIA

FOR REVISION ONLY

REQUEST FOR INFORMATION NOT ADDRESSED IN THIS CCO REMAIN IN FORCE

MARK	DATE	DESCRIPTIONS	BY	CH'D	CCO#
		REVISIONS			
1	03/04/08	BARRIER MODIFICATIONS	JS BM	RG SE	44

CONTRACT CHANGE ORDER NO._____
SHEET_____ OF _____

CONDUIT DATA

Conduit No	Reference	Size	Type	Total Fill (mm²)	Allowable Fill (mm²)	Included Cable No.	Conductor Type
4037	E-73	53	RGS-PVC coated conduit	227.46	879.42	Pull rope	Soft-Fiber Polyester
						UP106-10	1-2/c + gnd #8,600 V, EPR insulation
4038	E-73	53	RGS-PVC coated conduit	0.00	879.42	Pull rope	Soft-Fiber Polyester
4039	E-73	53	RGS-PVC coated conduit	0.00	879.42	Pull rope	Soft-Fiber Polyester
4040	E-114	78	RGS-PVC coated conduit	727.89	1935.24	1202-3	1-7/C #16,600 V, EPR insulation
						Pull rope	Soft-Fiber Polyester
						1202-4	1-3/C #14,600 V, EPR insulation
						1202-2	1-3/C #14,600 V, EPR insulation
						UP106-15	1-2/c + gnd #8,600 V, EPR insulation
						1202-1	1-2/c + gnd #8,600 V, EPR insulation
4057	E-116	78	RGS-PVC coated conduit	324.26	1935.24	Pull rope	Soft-Fiber Polyester
						CCTVE01BD	TVL
						MVDSW03A	MVDS DLC
						CCTVE01BC	TVC
4076	E-74	53	RGS-PVC coated conduit	49.21	879.42	UP107-5	2 + 1 gnd #12,#12, 600 V, RHH/RHW insulation
						Pull rope	Soft-Fiber Polyester
4077	E-74	53	RGS-PVC coated conduit	205.22	879.42	UP107-10	1-2/c + gnd #12,600 V, EPR insulation
						UP207-10	1-3/C #12,600 V, EPR insulation
						Pull rope	Soft-Fiber Polyester
4078	E-74	53	RGS-PVC coated conduit	0.00	879.42	Pull rope	Soft-Fiber Polyester
4082	E-117	53	RGS-PVC coated conduit	150.44	879.42	MVDSW04A	MVDS DLC
4101	E-75	53	RGS-PVC coated conduit	254.43	879.42	Pull rope	Soft-Fiber Polyester
						UP108-5	2 + 1 gnd #12,#12, 600 V, RHH/RHW insulation
						UP108-17	1-2/c + gnd #12,600 V, EPR insulation
						UP108-11	1-2/c + gnd #12,600 V, EPR insulation
4102	E-75	53	RGS-PVC coated conduit	0.00	879.42	Pull rope	Soft-Fiber Polyester
4103	E-75	53	RGS-PVC coated conduit	0.00	879.42	Pull rope	Soft-Fiber Polyester
4104	E-75	78	RGS-PVC coated conduit	1217.21	2564.19	2201-4	1-9/C #16,600 V, EPR insulation
						2201-2	1-2/c + gnd #8,600 V, EPR insulation
						2201-3	1-3/C #14,600 V, EPR insulation
						Pull rope	Soft-Fiber Polyester
						UP208-15	1-2/c + gnd #8,600 V, EPR insulation
						2201-1	1-2/c + gnd #8,600 V, EPR insulation
						2201-6	1-2/c + gnd #8,600 V, EPR insulation
						2201-5	1-3/C #14,600 V, EPR insulation
4107	E-118	78	RGS-PVC coated conduit	317.80 (1)	1935.24	1474-8B	1 - 6 pair, shielded #18 with overall shield, 300 V, PVC jacket (1)
						1474-8A	1 - 6 pair, shielded #18 with overall shield, 300 V, PVC jacket
						Pull rope	Soft-Fiber Polyester (1)
4108	E-117	78	RGS-PVC coated conduit	0.00	1935.24	Pull rope	Soft-Fiber Polyester
4128	E-100	53	RGS conduit	0.00	879.42	Pull rope	Soft-Fiber Polyester
4148	E-100	53	RGS conduit	0.00	879.42	Pull rope	Soft-Fiber Polyester
4149	E-96	78	RGS conduit	648.58	1935.24	A-1011-2	1-3/c + gnd #6,600 V, EPR insulation
						A-1011-2	1-3/c + gnd #6,600 V, EPR insulation
4150	E-96	78	RGS conduit	648.58	1935.24	A-1011-2	1-3/c + gnd #6,600 V, EPR insulation
						A-1011-2	1-3/c + gnd #6,600 V, EPR insulation
4151	E-96	78	RGS conduit	648.58	1935.24	A-1011-2	1-3/c + gnd #6,600 V, EPR insulation
						A-1011-2	1-3/c + gnd #6,600 V, EPR insulation
4152	E-96	78	RGS conduit	648.58	1935.24	A-1011-2	1-3/c + gnd #6,600 V, EPR insulation
						A-1011-2	1-3/c + gnd #6,600 V, EPR insulation
4153	E-96	78	RGS conduit	648.58	1935.24	A-1011-2	1-3/c + gnd #6,600 V, EPR insulation
						A-1011-2	1-3/c + gnd #6,600 V, EPR insulation

CONDUIT DATA

Conduit No	Reference	Size	Type	Total Fill (mm²)	Allowable Fill (mm²)	Included Cable No.	Conductor Type
4154	E-96	78	RGS conduit	648.58	1935.24	A-1011-2	1-3/c + gnd #6,600V, EPR insulation
						A-1011-2	1-3/c + gnd #6,600 V, EPR insulation
4155	E-97	78	RGS conduit	648.58	1935.24	A-1011-2	1-3/c + gnd #6,600 V, EPR insulation
						A-1011-2	1-3/c + gnd #6,600 V, EPR insulation
4156	E-97	78	RGS conduit	648.58	1935.24	A-1011-2	1-3/c + gnd #6,600 V, EPR insulation
						A-1011-2	1-3/c + gnd #6,600 V, EPR insulation
4157	E-97	78	RGS conduit	648.58	1935.24	A-1011-2	1-3/c + gnd #6,600 V, EPR insulation
						A-1011-2	1-3/c + gnd #6,600 V, EPR insulation
4158	E-97	78	RGS conduit	648.58	1935.24	A-1011-2	1-3/c + gnd #6,600 V, EPR insulation
						A-1011-2	1-3/c + gnd #6,600 V, EPR insulation
4159	E-97	78	RGS conduit	648.58	1935.24	A-1011-2	1-3/c + gnd #6,600 V, EPR insulation
						A-1011-2	1-3/c + gnd #6,600 V, EPR insulation
4160	E-97	78	RGS conduit	851.47	1935.24	A-1012-1	1-3/c + gnd #2 ,600V, EPR insulation
						A-1012-2	1-3/c + gnd #6,600 V, EPR insulation
4161	E-97	78	RGS conduit	648.58	1935.24	A-1012-2	1-3/c + gnd #6,600 V, EPR insulation
						A-1012-2	1-3/c + gnd #6,600 V, EPR insulation
4162	E-97	78	RGS conduit	648.58	1935.24	A-1012-2	1-3/c + gnd #6,600 V, EPR insulation
						A-1012-2	1-3/c + gnd #6,600 V, EPR insulation
4163	E-98	78	RGS conduit	648.58	1935.24	A-1012-2	1-3/c + gnd #6,600 V, EPR insulation
						A-1012-2	1-3/c + gnd #6,600 V, EPR insulation
4164	E-98	78	RGS conduit	648.58	1935.24	A-1012-2	1-3/c + gnd #6,600 V, EPR insulation
						A-1012-2	1-3/c + gnd #6,600 V, EPR insulation
4165	E-98	78	RGS conduit	648.58	1935.24	A-1012-2	1-3/c + gnd #6,600 V, EPR insulation
						A-1012-2	1-3/c + gnd #6,600 V, EPR insulation
4166	E-98	78	RGS conduit	648.58	1935.24	A-1012-2	1-3/c + gnd #6,600 V, EPR insulation
						A-1012-2	1-3/c + gnd #6,600 V, EPR insulation
4167	E-98	78	RGS conduit	648.58	1935.24	A-1012-2	1-3/c + gnd #6,600 V, EPR insulation
						A-1012-2	1-3/c + gnd #6,600 V, EPR insulation
4168	E-98	78	RGS conduit	648.58	1935.24	A-1012-2	1-3/c + gnd #6,600 V, EPR insulation
						A-1012-2	1-3/c + gnd #6,600 V, EPR insulation
4169	E-98	78	RGS conduit	648.58	1935.24	A-1012-2	1-3/c + gnd #6,600 V, EPR insulation
						A-1012-2	1-3/c + gnd #6,600 V, EPR insulation
4170	E-98	78	RGS conduit	648.58	1935.24	A-1012-2	1-3/c + gnd #6,600 V, EPR insulation
						A-1012-2	1-3/c + gnd #6,600 V, EPR insulation
4171	E-98	78	RGS conduit	648.58	1935.24	A-1012-2	1-3/c + gnd #6,600 V, EPR insulation
						A-1012-2	1-3/c + gnd #6,600 V, EPR insulation

For continuation, see next sheet.

CONDUIT AND TRAY SCHEDULE

E-432

DESIGN OVERSIGHT	CALCULATED/ DESIGNED BY	CHECKED BY	DRAWN BY	DATE	REVISED BY	DATE REVISED
BEHZAD GOLEMOHAMMADI	PBP	AB	AB	8/02		

STATE OF CALIFORNIA - DEPARTMENT OF TRANSPORTATION
Caltrans

LAST REVISION 00-00-00 | DATE PLOTTED => 5/22/2008 | TIME PLOTTED => 11:14:24 AM

FOR REDUCED PLANS ORIGINAL SCALE IS IN MILLIMETERS 0 20 40 60 80

DGN FILE => T:\13103\MS\pse\SAS Struc\CCO\SAS CC044\04-0120F1_0387R01.dgn
USERNAME => llorico

CU 04251 | EA 0120F1

CONDUIT DATA

Conduit No	Reference	Size	Type	Total Fill (mm²)	Allowable Fill (mm²)	Included Cable No.	Conductor Type
4172	E-99	78	RGS conduit	851.47	1935.24	A-1013-2	1-3/c + gnd #6,600 V, EPR insulation
						A-1013-1	1-3/c + gnd #2,600V, EPR insulation
4173	E-99	78	RGS conduit	648.58	1935.24	A-1013-2	1-3/c + gnd #6,600 V, EPR insulation
						A-1013-2	1-3/c + gnd #6,600 V, EPR insulation
4174	E-99	78	RGS conduit	648.58	1935.24	A-1013-2	1-3/c + gnd #6,600 V, EPR insulation
						A-1013-2	1-3/c + gnd #6,600 V, EPR insulation
4175	E-99	78	RGS conduit	648.58	1935.24	A-1013-2	1-3/c + gnd #6,600 V, EPR insulation
						A-1013-2	1-3/c + gnd #6,600 V, EPR insulation
4176	E-99	78	RGS conduit	648.58	1935.24	A-1013-2	1-3/c + gnd #6,600 V, EPR insulation
						A-1013-2	1-3/c + gnd #6,600 V, EPR insulation
4177	E-99	78	RGS conduit	648.58	1935.24	A-1013-2	1-3/c + gnd #6,600 V, EPR insulation
						A-1013-2	1-3/c + gnd #6,600 V, EPR insulation
4178	E-99	78	RGS conduit	648.58	1935.24	A-1013-2	1-3/c + gnd #6,600 V, EPR insulation
						A-1013-2	1-3/c + gnd #6,600 V, EPR insulation
4179	E-99	78	RGS conduit	648.58	1935.24	A-1013-2	1-3/c + gnd #6,600 V, EPR insulation
						A-1013-2	1-3/c + gnd #6,600 V, EPR insulation
4180	E-99	78	RGS conduit	648.58	1935.24	A-1013-2	1-3/c + gnd #6,600 V, EPR insulation
						A-1013-2	1-3/c + gnd #6,600 V, EPR insulation
4181	E-99	78	RGS conduit	648.58	1935.24	A-1013-2	1-3/c + gnd #6,600 V, EPR insulation
						A-1013-2	1-3/c + gnd #6,600 V, EPR insulation
4182	E-99	78	RGS conduit	648.58	1935.24	A-1013-2	1-3/c + gnd #6,600 V, EPR insulation
						A-1013-2	1-3/c + gnd #6,600 V, EPR insulation
4183	E-99	78	RGS conduit	648.58	1935.24	A-1013-2	1-3/c + gnd #6,600 V, EPR insulation
						A-1013-2	1-3/c + gnd #6,600 V, EPR insulation
4184	E-100	78	RGS conduit	648.58	1935.24	A-1013-2	1-3/c + gnd #6,600 V, EPR insulation
						A-1013-2	1-3/c + gnd #6,600 V, EPR insulation
4185	E-100	78	RGS conduit	851.47	1935.24	A-1014-2	1-3/c + gnd #6,600 V, EPR insulation
						A-1014-1	1-3/c + gnd #2,600V, EPR insulation
4186	E-100	78	RGS conduit	648.58	1935.24	A-1014-2	1-3/c + gnd #6,600 V, EPR insulation
						A-1014-2	1-3/c + gnd #6,600 V, EPR insulation
4187	E-100	78	RGS conduit	648.58	1935.24	A-1014-2	1-3/c + gnd #6,600 V, EPR insulation
						A-1014-2	1-3/c + gnd #6,600 V, EPR insulation
4188	E-100	78	RGS conduit	648.58	1935.24	A-1014-2	1-3/c + gnd #6,600 V, EPR insulation
						A-1014-2	1-3/c + gnd #6,600 V, EPR insulation
4189	E-100	78	RGS conduit	648.58	1935.24	A-1014-2	1-3/c + gnd #6,600 V, EPR insulation
						A-1014-2	1-3/c + gnd #6,600 V, EPR insulation
4190	E-100	78	RGS conduit	648.58	1935.24	A-1014-2	1-3/c + gnd #6,600 V, EPR insulation
						A-1014-2	1-3/c + gnd #6,600 V, EPR insulation
4191	E-100	78	RGS conduit	648.58	1935.24	A-1014-2	1-3/c + gnd #6,600 V, EPR insulation
						A-1014-2	1-3/c + gnd #6,600 V, EPR insulation
4192	E-96	78	RGS conduit	648.58	1935.24	A-1011-2	1-3/c + gnd #6,600 V, EPR insulation
						A-1011-2	1-3/c + gnd #6,600 V, EPR insulation
4193	E-97	78	RGS conduit	648.58	1935.24	A-1012-2	1-3/c + gnd #6,600 V, EPR insulation
						A-1012-2	1-3/c + gnd #6,600 V, EPR insulation
4194	E-101	78	RGS conduit	648.58	1935.24	A-1014-2	1-3/c + gnd #6,600 V, EPR insulation
						A-1014-2	1-3/c + gnd #6,600 V, EPR insulation
4195	E-101	78	RGS conduit	648.58	1935.24	A-1014-2	1-3/c + gnd #6,600 V, EPR insulation
						A-1014-2	1-3/c + gnd #6,600 V, EPR insulation
4196	E-101	78	RGS conduit	648.58	1935.24	A-1014-2	1-3/c + gnd #6,600 V, EPR insulation
						A-1014-2	1-3/c + gnd #6,600 V, EPR insulation
4197	E-101	78	RGS conduit	648.58	1935.24	A-1014-2	1-3/c + gnd #6,600 V, EPR insulation
						A-1014-2	1-3/c + gnd #6,600 V, EPR insulation

REQUEST FOR INFORMATION NOT ADDRESSED IN THIS CCO REMAIN IN FORCE

MARK	DATE	DESCRIPTIONS	BY	CH'D	CCO#
		REVISIONS			
1	03/04/08	BARRIER MODIFICATIONS	TW	RG	44

CONTRACT CHANGE ORDER NO._____
SHEET_____ OF _____

FOR REVISION ONLY

REGISTERED PROFESSIONAL ENGINEER S. A. ESTOQUE, JR. No. E-10151 Exp. 12/31/2008 ELECTRICAL STATE OF CALIFORNIA

Caltrans Metric

DIST	COUNTY	ROUTE	KILOMETER POST TOTAL PROJECT	SHEET No	TOTAL SHEETS
04	SF	80	13.2/13.9	388 R1	1204

Jens Erlingsson 12/19/02
REGISTERED ELECTRICAL ENGINEER DATE

REGISTERED PROFESSIONAL ENGINEER JENS ERLINGSSON No. 8249 Exp. 9/30/06 ELECTRICAL STATE OF CALIFORNIA

12-6-04
PLANS APPROVAL DATE

PB POWER, Inc.
A Parsons Brinckerhoff Company
303 Second St., Suite 700N
San Francisco, CA 94107-1317

The State of California or its officers or agents shall not be responsible for the accuracy or completeness of electronic copies of this plan sheet.

Caltrans now has a web site! To get to the web site, go to http://www.dot.ca.gov

CONDUIT DATA

Conduit No	Reference	Size	Type	Total Fill (mm²)	Allowable Fill (mm²)	Included Cable No.	Conductor Type
4198	E-101	78	RGS conduit	648.58	1935.24	A-1014-2	1-3/c + gnd #6,600 V, EPR insulation
						A-1014-2	1-3/c + gnd #6,600 V, EPR insulation
4199	E-101	78	RGS conduit	324.29	1935.24	A-1014-2	1-3/c + gnd #6,600 V, EPR insulation
4201	E-114	78	RGS-PVC coated conduit	62.07	1935.24	Pull rope	Soft-Fiber Polyester
						1255-1	1-3/C #16,600 V, EPR insulation
4202	E-114	78	RGS-PVC coated conduit	0.00	1935.24	Pull rope	Soft-Fiber Polyester
4203	E-114	78	RGS-PVC coated conduit	1463.32	1935.24	UP104-3	1-2/c + gnd #10,600 V, EPR insulation
						1095	1-3/c + gnd #2,600 V, EPR insulation
						UP104-8	1-2/c + gnd #8,600 V, EPR insulation
						UP104-6	1-2/c + gnd #8,600 V, EPR insulation
						UP104-7	1-2/c + gnd #8,600 V, EPR insulation
						Pull rope	Soft-Fiber Polyester
						UP104-9	1-2/c + gnd #10,600V, EPR insulation
4204	E-114	78	RGS-PVC coated conduit	0.00	1935.24	Pull rope	Soft-Fiber Polyester
4205	E-114	78	RGS-PVC coated conduit	0.00	1935.24	Pull rope	Soft-Fiber Polyester
4206	E-114	78	RGS-PVC coated conduit	150.44	1935.24	Pull rope	Soft-Fiber Polyester
						MVDSW02A	MVDS DLC
4208	E-114	78	RGS-PVC coated conduit	30.19	1935.24	1475-3A	12 Fiber, single mode fiberoptic cable
						Pull rope	Soft-Fiber Polyester
4221	E-115	78	RGS conduit	719.53 (1)	1935.24	Pull rope	Soft-Fiber Polyester (1)
						S-3056-7	1-2/C #14,600 V, EPR insulation
						S-3056-5	1-4/C #14,600 V, EPR insulation
						1255-1	1-3/C #16,600 V, EPR insulation
						1255-2	1-3/C #16,600 V, EPR insulation (1)
						1115-2	1-3/C #16,600 V, EPR insulation
						1115-1	1-3/C #14,600 V, EPR insulation
						1202-4	1-3/C #14,600 V, EPR insulation
						1202-2	1-3/C #14,600 V, EPR insulation
						1202-3	1-7/C #16,600 V, EPR insulation
4222	E-115	78	RGS conduit	682.38	1935.24	Pull rope	Soft-Fiber Polyester
						1201-6	1-2/c + gnd #8,600 V, EPR insulation
						1201-2	1-2/c + gnd #8,600 V, EPR insulation
						1201-1	1-2/c + gnd #8,600 V, EPR insulation
4223	E-115	78	RGS conduit	1336.44	1935.24	UP105-10	1-2/c + gnd #8,600 V, EPR insulation
						UP105-3	1-2/c + gnd #10,600 V, EPR insulation
						UP105-7	1-2/c + gnd #8,600 V, EPR insulation
						Pull rope	Soft-Fiber Polyester
						1096	1-3/c + gnd #2,600 V, EPR insulation
						UP105-8	1-2/c + gnd #8,600 V, EPR insulation

For continuation, see next sheet.

CONDUIT AND TRAY SCHEDULE

E-433

DESIGN OVERSIGHT
BEHZAD GOLEMOHAMMADI

CALCULATED/DESIGNED BY PBP
CHECKED BY AB

DATE	REVISED BY	DATE REVISED
8/02		8/02

STATE OF CALIFORNIA - DEPARTMENT OF TRANSPORTATION
Caltrans

LAST REVISION 00-00-00
DATE PLOTTED => 5/22/2008
TIME PLOTTED => 11:14:45 AM

FOR REDUCED PLANS ORIGINAL SCALE IS IN MILLIMETERS 0 20 40 60 80

DGN FILE => T:\13103\MS\pse\SAS Struc\CCO\SAS CC044\04-0120F1_0388R01.dgn
USERNAME => florico

CU 04251 EA 0120F1

DIST	COUNTY	ROUTE	KILOMETER POST TOTAL PROJECT	SHEET NO	TOTAL SHEETS
04	SF	80	13.2/13.9	389 R1	1204

Jens Ellingsson 12/19/02
REGISTERED ELECTRICAL ENGINEER DATE

12-6-04
PLANS APPROVAL DATE

REGISTERED PROFESSIONAL ENGINEER — JENS ERLINGSSON No. 8249 Exp. 9/30/06 ELECTRICAL — STATE OF CALIFORNIA

PB POWER, Inc.
A Parsons Brinckerhoff Company
303 Second St., Suite 700N
San Francisco, CA 94107-1317

The State of California or its officers or agents shall not be responsible for the accuracy or completeness of electronic copies of this plan sheet.

Caltrans now has a web site! To get to the web site, go to http://www.dot.ca.gov

REQUEST FOR INFORMATION NOT ADDRESSED IN THIS CCO REMAIN IN FORCE

MARK	DATE	DESCRIPTIONS	BY	CH'D	CCO#
		REVISIONS			
1	03/04/08	BARRIER MODIFICATIONS	JS BM	RG SE	44

CONTRACT CHANGE ORDER NO._____
SHEET_____ OF_____

REGISTERED PROFESSIONAL ENGINEER — S. A. ESTOQUE, JR. No. E-10151 Exp. 12/31/2008 ELECTRICAL — STATE OF CALIFORNIA

FOR REVISION ONLY

CONDUIT DATA

Conduit No	Reference	Size	Type	Total Fill (mm²)	Allowable Fill (mm²)	Included Cable No.	Conductor Type
4224	E-115	78	RGS conduit	227.46	1935.24	Pull rope	Soft-Fiber Polyester
						UP105-9	1-2/c + gnd #8,600 V, EPR insulation
4225	E-115	78	RGS conduit	317.80 1	1935.24		1
						Pull rope	Soft-Fiber Polyester
						1474-5B	1 - 6 pair, shielded #18 with overall shield, 300 V, PVC jacket
						1474-5A	1 - 6 pair, shielded #18 with overall shield, 300 V, PVC jacket
							1
4226	E-115	78	RGS conduit	0.00	1935.24	Pull rope	Soft-Fiber Polyester
4241	E-116	78	RGS conduit	562.50	1935.24	1255-2	1-3/C #16,600 V, EPR insulation
						1202-4	1-3/C #14,600 V, EPR insulation
						1202-3	1-7/C #16,600 V, EPR insulation
						1202-2	1-3/C #14,600 V, EPR insulation
						1202-1	1-2/c + gnd #8,600 V, EPR insulation
						Pull rope	Soft-Fiber Polyester
4242	E-116	78	RGS conduit	192.40	1935.24	CCTVE01BA	TVP
						CCTVE01BB	TVCP
						Pull rope	Soft-Fiber Polyester
4243	E-116	78	RGS conduit	1364.76	1935.24	UP106-8	1-2/c + gnd #8,600 V, EPR insulation
						UP106-6	1-2/c + gnd #8,600 V, EPR insulation
						UP106-3	1-2/c + gnd #8,600 V, EPR insulation
						UP106-7	1-2/c + gnd #8,600 V, EPR insulation
						UP106-1	1-2/c + gnd #8,600 V, EPR insulation
						UP106-9	1-2/c + gnd #8,600 V, EPR insulation
						Pull rope	Soft-Fiber Polyester
4244	E-116	78	RGS conduit	527.18	1935.24	Pull rope	Soft-Fiber Polyester
						1097	1-3/c + gnd #2,600 V, EPR insulation
4245	E-116	78	RGS conduit	0.00	1935.24	Pull rope	Soft-Fiber Polyester
4246	E-116	78	RGS conduit	324.26	1935.24	MVDSW03A	MVDS DLC
						Pull rope	Soft-Fiber Polyester
						CCTVE01BD	TVL
						CCTVE01BC	TVC
4248	E-116	78	RGS-PVC coated conduit	30.19	1935.24	Pull rope	Soft-Fiber Polyester
						1475-3B	12 Fiber, single mode fiberoptic cable
4261	E-117	78	RGS conduit	62.07	1935.24	Pull rope	Soft-Fiber Polyester
						1256-1	1-3/C #16,600 V, EPR insulation
4262	E-117	78	RGS conduit	0.00	1935.24	Pull rope	Soft-Fiber Polyester
4263	E-117	78	RGS conduit	1664.48	1935.24	Pull rope	Soft-Fiber Polyester
						UP107-8	1-2/c + gnd #8,600 V, EPR insulation
						UP107-7	1-2/c + gnd #8,600 V, EPR insulation
						UP107-9	1-2/c + gnd #8,600 V, EPR insulation
						UP107-3	1-2/c + gnd #8,600 V, EPR insulation
						1098	1-3/c + gnd #2,600 V, EPR insulation
						UP107-6	1-2/c + gnd #8,600 V, EPR insulation
4264	E-117	78	RGS conduit	0.00	1935.24	Pull rope	Soft-Fiber Polyester
4265	E-117	78	RGS conduit	150.44	1935.24	Pull rope	Soft-Fiber Polyester
						MVDSW04A	MVDS DLC
4266	E-117	78	RGS conduit	0.00	1935.24	Pull rope	Soft-Fiber Polyester
4268	E-117	78	RGS-PVC coated conduit	30.19	1935.24	Pull rope	Soft-Fiber Polyester
						1475-3C	12 Fiber, single mode fiberoptic cable
4281	E-118	78	RGS conduit	294.50	1935.24	1118-1	1-3/C #14,600 V, EPR insulation
						1117-1	1-3/C #14,600 V, EPR insulation
						1117-2	1-3/C #16,600 V, EPR insulation
						1118-2	1-3/C #16,600 V, EPR insulation
						Pull rope	Soft-Fiber Polyester

CONDUIT DATA

Conduit No	Reference	Size	Type	Total Fill (mm²)	Allowable Fill (mm²)	Included Cable No.	Conductor Type
4282	E-118	78	RGS conduit	1087.85	1935.24	2201-5	1-3/C #14,600 V, EPR insulation
						2201-1	1-2/c + gnd #8,600 V, EPR insulation
						2201-2	1-2/c + gnd #8,600 V, EPR insulation
						2201-6	1-2/c + gnd #8,600 V, EPR insulation
						Pull rope	Soft-Fiber Polyester
						2201-4	1-9/C #16,600 V, EPR insulation
						2201-3	1-3/C #14,600 V, EPR insulation
						S-3056-8	1-4/C #14,600 V, EPR insulation
4283	E-118	78	RGS conduit	1891.94	1935.24	UP108-4	1-2/c + gnd #8,600 V, EPR insulation
						1099	1-3/c + gnd #2,600 V, EPR insulation
						UP108-12	1-2/c + gnd #8,600 V, EPR insulation
						UP108-9	1-2/c + gnd #8,600 V, EPR insulation
						UP108-7	1-2/c + gnd #8,600 V, EPR insulation
						Pull rope	Soft-Fiber Polyester
						UP108-8	1-2/c + gnd #8,600 V, EPR insulation
						UP108-10	1-2/c + gnd #8,600 V, EPR insulation
4284	E-118	78	RGS conduit	454.92	1935.24	Pull rope	Soft-Fiber Polyester
						UP108-3	1-2/c + gnd #8,600 V, EPR insulation
						UP108-2	1-2/c + gnd #8,600 V, EPR insulation
4285	E-118	78	RGS conduit	317.80 1	1935.24	Pull rope	Soft-Fiber Polyester
							1
						1474-8A	1 - 6 pair, shielded #18 with overall shield, 300 V, PVC jacket
						1474-8B	1 - 6 pair, shielded #18 with overall shield, 300 V, PVC jacket
4286	E-118	78	RGS conduit	0.00	1935.24	Pull rope	Soft-Fiber Polyester
4301	E-96	78	RGS conduit	366.10	1935.24	A-3001-1	1-3/c + gnd #4,600 V, EPR insulation
4303	E-96	41	RGS conduit	0.00	534.55	Pull rope	Soft-Fiber Polyester
4304	E-96	41	RGS conduit	212.85	534.55	Pull rope	Soft-Fiber Polyester
						A-3001-2	3 + 1 gnd #6,#8, 600 V, RHH/RHW insulation
4305	E-96	41	RGS conduit	0.00	534.55	Pull rope	Soft-Fiber Polyester
4306	E-96	41	RGS conduit	0.00	534.55	Pull rope	Soft-Fiber Polyester
4307	E-96	53	RGS conduit	0.00	879.42	Pull rope	Soft-Fiber Polyester
4308	E-96	53	RGS conduit	0.00	879.42	Pull rope	Soft-Fiber Polyester
4309	E-96	41	RGS conduit	0.00	534.55	Pull rope	Soft-Fiber Polyester
4310	E-96	41	RGS conduit	0.00	534.55	Pull rope	Soft-Fiber Polyester

For continuation, see next sheet.

CONDUIT AND TRAY SCHEDULE

E-434

DESIGN OVERSIGHT	CALCULATED/ DESIGNED BY	CHECKED BY	DATE	REVISED BY	DATE REVISED
BEHZAD GOLEMOHAMMADI	PBP	AB	8/02		8/02

STATE OF CALIFORNIA - DEPARTMENT OF TRANSPORTATION
Caltrans

FOR REDUCED PLANS ORIGINAL SCALE IS IN MILLIMETERS 0 20 40 60 80

DGN FILE = T:\13103\MS\pse\SAS Struc\CCO\SAS CC044\04-0120F1_0389R01.dgn
USERNAME = tlorico

CU 04251 | EA 0120F1

LAST REVISION 00-00-00
DATE PLOTTED = 5/22/2008
TIME PLOTTED = 11:15:03 AM

DIST	COUNTY	ROUTE	KILOMETER POST TOTAL PROJECT	SHEET NO.	TOTAL SHEETS
04	SF	80	13.2/13.9	390 R2	1204

Jens Erlingsson 12/19/02
REGISTERED ELECTRICAL ENGINEER DATE

12-6-04
PLANS APPROVAL DATE

REGISTERED PROFESSIONAL ENGINEER — JENS ERLINGSSON No. 8249 Exp. 9/30/06 ELECTRICAL — STATE OF CALIFORNIA

PB POWER, Inc.
A Parsons Brinckerhoff Company
303 Second St., Suite 700N
San Francisco, CA 94107-1317

The State of California or its officers or agents shall not be responsible for the accuracy or completeness of electronic copies of this plan sheet.

Caltrans now has a web site! To get to the web site, go to http://www.dot.ca.gov

REQUEST FOR INFORMATION NOT ADDRESSED IN THIS CCO REMAIN IN FORCE

MARK	DATE	DESCRIPTIONS	BY	CH'D	CCO#
		REVISIONS			
2	03/04/08	BARRIER MODIFICATIONS	JS BM	RG SE	44
1	02/19/08	ELECTRICAL MODIFICATIONS	MP EL	RR	42

REGISTERED PROFESSIONAL ENGINEER — S. A. ESTOQUE, JR. No. E-10151 Exp. 12/31/2008 ELECTRICAL — STATE OF CALIFORNIA

CONTRACT CHANGE ORDER NO._____
SHEET_____ OF _____

FOR REVISION ONLY

CONDUIT DATA

Conduit No	Reference	Size	Type	Total Fill (mm²)	Allowable Fill (mm²)	Included Cable No.	Conductor Type
4311	E-96	41	RGS conduit	126.88	534.55	UP104-3	1-2/c + gnd #10,600 V, EPR insulation
						Pull rope	Soft-Fiber Polyester
4312	E-96	41	RGS conduit	0.00	534.55	Pull rope	Soft-Fiber Polyester
4313	E-96	78	RGS conduit	1020.16	1935.24	Pull rope	Soft-Fiber Polyester
						S-1031-1	1-3/c + gnd #2,600 V, EPR insulation
						UP104-3	1-2/c + gnd #10,600 V, EPR insulation
						A-1035-3	1-3/c + gnd #6,600 V, EPR insulation
4314	E-96	53	RGS conduit	648.58	879.42	S-1031-3	1-3/c + gnd #6,600 V, EPR insulation
						A-1035-3	1-3/c + gnd #6,600 V, EPR insulation
						Pull rope	Soft-Fiber Polyester
4315	E-96	41	RGS conduit	0.00	534.55	Pull rope	Soft-Fiber Polyester
4316	E-96	41	RGS conduit	0.00	534.55	Pull rope	Soft-Fiber Polyester
4317	E-96	53	RGS conduit	851.47	879.42	A-1011-1	1-3/c + gnd #2,600 V, EPR insulation
						Pull rope	Soft-Fiber Polyester
						A-1011-2	1-3/c + gnd #6,600 V, EPR insulation
4320	E-96	53	RGS conduit	0.00	879.42	Pull rope	Soft-Fiber Polyester
4321	E-96	41	RGS conduit	0.00	534.55	Pull rope	Soft-Fiber Polyester
4322	E-96	41	RGS conduit	0.00	534.55	Pull rope	Soft-Fiber Polyester
4323	E-96	53	RGS conduit	0.00	879.42	Pull rope	Soft-Fiber Polyester
4324	E-96	53	RGS conduit	0.00	879.42	Pull rope	Soft-Fiber Polyester
4325	E-96	41	RGS conduit	0.00	534.55	Pull rope	Soft-Fiber Polyester
4326	E-96	41	RGS conduit	0.00	534.55	Pull rope	Soft-Fiber Polyester
4327	E-96	41	RGS conduit	0.00	534.55	Pull rope	Soft-Fiber Polyester
4328	E-96	41	RGS conduit	0.00	534.55	Pull rope	Soft-Fiber Polyester
4329	E-96	41	RGS conduit	0.00	534.55	Pull rope	Soft-Fiber Polyester
4330	E-96	41	RGS conduit	0.00	534.55	Pull rope	Soft-Fiber Polyester
4331	E-96	41	RGS conduit	0.00	534.55	Pull rope	Soft-Fiber Polyester
4332	E-96	41	RGS conduit	0.00	534.55	Pull rope	Soft-Fiber Polyester
4333	E-97	41	RGS conduit	212.85	534.55	Pull rope	Soft-Fiber Polyester
						A-3002-2	3 + 1 gnd #6,#8, 600 V, RHH/RHW insulation
4334	E-97	41	RGS conduit	0.00	534.55	Pull rope	Soft-Fiber Polyester
4335	E-97	53	RGS conduit	366.10	879.42	Pull rope	Soft-Fiber Polyester
						A-3002-1	1-3/c + gnd #4,600 V, EPR insulation
4336	E-97	53	RGS conduit	0.00	879.42	Pull rope	Soft-Fiber Polyester
4337	E-97	41	RGS conduit	0.00	534.55	Pull rope	Soft-Fiber Polyester
4338	E-97	41	RGS conduit	0.00	534.55	Pull rope	Soft-Fiber Polyester
4339	E-97	41	RGS conduit	0.00	534.55	Pull rope	Soft-Fiber Polyester
4340	E-97	41	RGS conduit	0.00	534.55	Pull rope	Soft-Fiber Polyester
4341	E-97	53	RGS conduit	0.00	879.42	Pull rope	Soft-Fiber Polyester
4342	E-97	53	RGS conduit	0.00	879.42	Pull rope	Soft-Fiber Polyester
4343	E-97	41	RGS conduit	0.00	534.55	Pull rope	Soft-Fiber Polyester
4344	E-97	41	RGS conduit	0.00	534.55	Pull rope	Soft-Fiber Polyester

CONDUIT DATA

Conduit No	Reference	Size	Type	Total Fill (mm²)	Allowable Fill (mm²)	Included Cable No.	Conductor Type
4345	E-119	53	RGS conduit	0.00	879.42	Pull rope	Soft-Fiber Polyester
4351	E-97	41	RGS conduit	0.00	534.55	Pull rope	Soft-Fiber Polyester
				(2)			(2)
4352	E-97	41	RGS conduit	0.00	534.55	Pull rope	Soft-Fiber Polyester
4353	E-97	53	RGS conduit	0.00	879.42	Pull rope	Soft-Fiber Polyester
				(2)			(2)
4354	E-97	53	RGS conduit	0.00	879.42	Pull rope	Soft-Fiber Polyester
4355	E-97	41	RGS conduit	0.00	534.55	Pull rope	Soft-Fiber Polyester
4356	E-97	41	RGS conduit	0.00	534.55	Pull rope	Soft-Fiber Polyester
4357	E-97	41	RGS conduit	466.61	534.55	UP205-1	1-2/c + gnd #10,600 V, EPR insulation
						Pull rope	Soft-Fiber Polyester
						UP105-3	1-2/c + gnd #10,600 V, EPR insulation
						A-3009-2	3 + 1 gnd #6,#8, 600 V, RHH/RHW insulation
4358	E-97	41	RGS conduit	0.00	534.55	Pull rope	Soft-Fiber Polyester
4359	E-97	53	RGS conduit	451.17	879.42	A-3009-3	1-3/c + gnd #6,600 V, EPR insulation
						UP205-1	1-2/c + gnd #10,600 V, EPR insulation
						Pull rope	Soft-Fiber Polyester
4360	E-97	53	RGS conduit	527.18	879.42	Pull rope	Soft-Fiber Polyester
						A-3009-1	1-3/c + gnd #2,600 V, EPR insulation
4361	E-97	41	RGS conduit	0.00	534.55	Pull rope	Soft-Fiber Polyester
				(2)			(2)
4362	E-97	41	RGS conduit	0.00	534.55	Pull rope	Soft-Fiber Polyester
4363	E-97	41	RGS conduit	324.29	534.55	A-3009-3	1-3/c + gnd #6,600 V, EPR insulation
						Pull rope	Soft-Fiber Polyester
4364	E-97	41	RGS conduit	212.85	534.55	A-3003-2	3 + 1 gnd #6,#8, 600 V, RHH/RHW insulation
						Pull rope	Soft-Fiber Polyester
4365	E-97	53	RGS conduit	324.29	879.42	A-3009-3	1-3/c + gnd #6,600 V, EPR insulation
						Pull rope	Soft-Fiber Polyester
4366	E-97	53	RGS conduit	366.10	879.42	A-3003-1	1-3/c + gnd #4,600 V, EPR insulation
						Pull rope	Soft-Fiber Polyester
4367	E-97	41	RGS conduit	0.00	534.55	Pull rope	Soft-Fiber Polyester
				(2)			(2)
4368	E-97	41	RGS conduit	0.00	534.55	Pull rope	Soft-Fiber Polyester

For continuation, see next sheet.

CONDUIT AND TRAY SCHEDULE

E-435

DATE	REVISED BY	DATE REVISED
8/02	AB	8/02

CALCULATED/DESIGNED BY: PBP
CHECKED BY

DESIGN OVERSIGHT: BEHZAD GOLEMOHAMMADI

STATE OF CALIFORNIA - DEPARTMENT OF TRANSPORTATION
Caltrans

LAST REVISION 00-00-00
DATE PLOTTED = 5/22/2008
TIME PLOTTED = 11:15:23 AM

FOR REDUCED PLANS ORIGINAL SCALE IS IN MILLIMETERS 0 20 40 60 80

DGN FILE = T:\13103\MS\pse\SAS Struc\CCO\SAS CCO44\04-0120F1_0390R02.dgn
USERNAME = tlorico

CU 04251 EA 0120F1

DIST	COUNTY	ROUTE	KILOMETER POST TOTAL PROJECT	SHEET No	TOTAL SHEETS
04	SF	80	13.2/13.9	391 R1	1204

REGISTERED ELECTRICAL ENGINEER — 12/19/02 DATE

12-6-04
PLANS APPROVAL DATE

REGISTERED PROFESSIONAL ENGINEER — JENS ERLINGSSON No. 8249 Exp. 9/30/06 ELECTRICAL — STATE OF CALIFORNIA

PB POWER, Inc.
A Parsons Brinckerhoff Company
303 Second St., Suite 700N
San Francisco, CA 94107-1317

The State of California or its officers or agents shall not be responsible for the accuracy or completeness of electronic copies of this plan sheet.

Caltrans now has a web site! To get to the web site, go to http://www.dot.ca.gov

REQUEST FOR INFORMATION NOT ADDRESSED IN THIS CCO REMAIN IN FORCE

MARK	DATE	DESCRIPTIONS	BY	CH'D	CCO#
		REVISIONS			
1	03/04/08	BARRIER MODIFICATIONS	TW	RG	44

CONTRACT CHANGE ORDER NO._____
SHEET____ OF ____

FOR REVISION ONLY

REGISTERED PROFESSIONAL ENGINEER — S. A. ESTOQUE, JR. No. E-10151 Exp. 12/31/2008 ELECTRICAL — STATE OF CALIFORNIA

CONDUIT DATA

Conduit No	Reference	Size	Type	Total Fill (mm²)	Allowable Fill (mm²)	Included Cable No.	Conductor Type
4369	E-97	41	RGS conduit	126.88	534.55	UP105-3	1-2/C + gnd #10,600 V, EPR insulation
						Pull rope	Soft-Fiber Polyester
4370	E-97	41	RGS conduit	0.00	534.55	Pull rope	Soft-Fiber Polyester
4371	E-97	53	RGS conduit	0.00	879.42	Pull rope	Soft-Fiber Polyester
4372	E-97	53	RGS conduit	0.00	879.42	Pull rope	Soft-Fiber Polyester
4373	E-97	41	RGS conduit	0.00	534.55	Pull rope	Soft-Fiber Polyester
4374	E-97	41	RGS conduit	0.00	534.55	Pull rope	Soft-Fiber Polyester
4376	E-97	53	RGS conduit	324.29	879.42	A-1011-2	1-3/C + gnd #6,600 V, EPR insulation
						Pull rope	Soft-Fiber Polyester
4377	E-97	53	RGS conduit	648.58	879.42	A-1012-2	1-3/C + gnd #6,600 V, EPR insulation
						A-1012-2	1-3/C + gnd #6,600 V, EPR insulation
						Pull rope	Soft-Fiber Polyester
4378	E-126	103	RGS conduit	2780.99	3324.51	1391	3-1/C #4/0 + 1/C #1/0 gnd, 15 kV, EPR insulation
						Pull rope	Soft-Fiber Polyester
4381	E-97	41	RGS conduit	324.29	534.55	A-3010-3	1-3/C #6 + gnd 600 V, RHH/RHW insulation
						Pull rope	Soft-Fiber Polyester
4382	E-97	41	RGS conduit	0.00	534.55	Pull rope	Soft-Fiber Polyester
4383	E-97	53	RGS conduit	324.29	879.42	A-3010-3	1-3/C #6 + gnd 600 V, RHH/RHW insulation
						Pull rope	Soft-Fiber Polyester
4384	E-97	53	RGS conduit	0.00	879.42	Pull rope	Soft-Fiber Polyester
4385	E-97	41	RGS conduit	0.00	534.55	Pull rope	Soft-Fiber Polyester
4386	E-97	41	RGS conduit	0.00	534.55	Pull rope	Soft-Fiber Polyester
4387	E-97	41	RGS conduit	440.31	534.55	A-3010-2	3 + 1 gnd #6,#8, 600 V, RHH/RHW insulation
						Pull rope	Soft-Fiber Polyester
						UP106-3	1-2/C + gnd #8,600 V, EPR insulation
4388	E-97	41	RGS conduit	0.00	534.55	Pull rope	Soft-Fiber Polyester
4389	E-97	53	RGS conduit	754.64	879.42	Pull rope	Soft-Fiber Polyester
						UP106-3	1-2/C + gnd #8,600 V, EPR insulation
						A-3010-1	1-3/C + gnd #2,600 V, EPR insulation
4390	E-97	53	RGS conduit	324.29	879.42	Pull rope	Soft-Fiber Polyester
						A-3010-3	1-3/C #6 + gnd 600 V, RHH/RHW insulation
4391	E-97	41	RGS conduit	0.00	534.55	Pull rope	Soft-Fiber Polyester
4392	E-97	41	RGS conduit	0.00	534.55	Pull rope	Soft-Fiber Polyester
4393	E-97	41	RGS conduit	212.85	534.55	A-3004-2	3 + 1 gnd #6,#8, 600 V, RHH/RHW insulation
						Pull rope	Soft-Fiber Polyester
4394	E-97	41	RGS conduit	0.00	534.55	Pull rope	Soft-Fiber Polyester
4395	E-97	78	RGS conduit	754.64	1935.24	Pull rope	Soft-Fiber Polyester
						UP106-1	1-2/C + gnd #8,600 V, EPR insulation
						A-3004-1	1-3/C + gnd #2,600 V, EPR insulation
4396	E-97	53	RGS conduit	0.00	879.42	Pull rope	Soft-Fiber Polyester
4397	E-97	41	RGS conduit	0.00	534.55	Pull rope	Soft-Fiber Polyester
4398	E-97	41	RGS conduit	0.00	534.55	Pull rope	Soft-Fiber Polyester
4399	E-97	41	RGS conduit	126.88	534.55	Pull rope	Soft-Fiber Polyester
						UP206-1	1-2/C + gnd #10,600 V, EPR insulation
4400	E-97	41	RGS conduit	0.00	534.55	Pull rope	Soft-Fiber Polyester
4401	E-97	53	RGS conduit	126.88	879.42	Pull rope	Soft-Fiber Polyester
						UP206-1	1-2/C + gnd #10,600 V, EPR insulation

CONDUIT DATA

Conduit No	Reference	Size	Type	Total Fill (mm²)	Allowable Fill (mm²)	Included Cable No.	Conductor Type
4402	E-97	53	RGS conduit	0.00	879.42	Pull rope	Soft-Fiber Polyester
4403	E-97	41	RGS conduit	0.00	534.55	Pull rope	Soft-Fiber Polyester
4404	E-97	41	RGS conduit	0.00	534.55	Pull rope	Soft-Fiber Polyester
4411	E-98	41	RGS conduit	0.00	534.55	Pull rope	Soft-Fiber Polyester
4412	E-98	41	RGS conduit	0.00	534.55	Pull rope	Soft-Fiber Polyester
4413	E-98	53	RGS conduit	0.00	879.42	Pull rope	Soft-Fiber Polyester
4414	E-98	53	RGS conduit	0.00	879.42	Pull rope	Soft-Fiber Polyester
4415	E-98	41	RGS conduit	0.00	534.55	Pull rope	Soft-Fiber Polyester
4416	E-98	41	RGS conduit	0.00	534.55	Pull rope	Soft-Fiber Polyester
4417	E-98	41	RGS conduit	0.00	534.55	Pull rope	Soft-Fiber Polyester
4418	E-98	41	RGS conduit	0.00	534.55	Pull rope	Soft-Fiber Polyester
4419	E-98	53	RGS conduit	0.00	879.42	Pull rope	Soft-Fiber Polyester
4420	E-98	53	RGS conduit	0.00	879.42	Pull rope	Soft-Fiber Polyester
4421	E-98	41	RGS conduit	0.00	534.55	Pull rope	Soft-Fiber Polyester
4422	E-98	41	RGS conduit	0.00	534.55	Pull rope	Soft-Fiber Polyester
4423	E-98	41	RGS conduit	212.85	534.55	A-3005-2	3 + 1 gnd #6,#8, 600 V, RHH/RHW insulation
						Pull rope	Soft-Fiber Polyester
4424	E-98	41	RGS conduit	0.00	534.55	Pull rope	Soft-Fiber Polyester
4425	E-98	53	RGS conduit	527.18	879.42	A-3005-1	1-3/C + gnd #2,600 V, EPR insulation
						Pull rope	Soft-Fiber Polyester
4426	E-98	53	RGS conduit	0.00	879.42	Pull rope	Soft-Fiber Polyester
4427	E-98	41	RGS conduit	0.00	534.55	Pull rope	Soft-Fiber Polyester
4428	E-98	41	RGS conduit	0.00	534.55	Pull rope	Soft-Fiber Polyester
4429	E-98	41	RGS conduit	0.00	534.55	Pull rope	Soft-Fiber Polyester
4430	E-98	41	RGS conduit	0.00	534.55	Pull rope	Soft-Fiber Polyester
4431	E-98	53	RGS conduit	0.00	879.42	Pull rope	Soft-Fiber Polyester
4432	E-98	53	RGS conduit	0.00	879.42	Pull rope	Soft-Fiber Polyester

For continuation, see next sheet.

CONDUIT AND TRAY SCHEDULE

E-436

CALCULATED/ DESIGNED BY	CHECKED BY	DATE	REVISED BY	DATE REVISED
PBP	AB	8/02		8/02

DESIGN OVERSIGHT — BEHZAD GOLEMOHAMMADI

STATE OF CALIFORNIA - DEPARTMENT OF TRANSPORTATION — Caltrans

LAST REVISION 00-00-00 — DATE PLOTTED => 5/22/2008 — TIME PLOTTED => 11:15:42 AM

FOR REDUCED PLANS ORIGINAL SCALE IS IN MILLIMETERS 0 20 40 60 80

DGN FILE = T:\13103\MS\pse\SAS Struc\CCO\SAS CC044\04-0120F1_0391R01.dgn
USERNAME = florico

CU 04251 | EA 0120F1

CONDUIT DATA

Conduit No	Reference	Size	Type	Total Fill (mm²)	Allowable Fill (mm²)	Included Cable No.	Conductor Type
4433	E-98	41	RGS conduit	0.00	534.55	Pull rope	Soft-Fiber Polyester
4434	E-98	41	RGS conduit	0.00	534.55	Pull rope	Soft-Fiber Polyester
4435	E-119	53	RGS conduit	0.00	879.42	Pull rope	Soft-Fiber Polyester
4436	E-98	53	RGS conduit	324.29	879.42	Pull rope	Soft-Fiber Polyester
						A-1012-2	1-3/C + gnd #6, 600 V, EPR insulation
4441	E-99	41	RGS conduit	0.00	534.55	Pull rope	Soft-Fiber Polyester
4442	E-99	41	RGS conduit	0.00	534.55	Pull rope	Soft-Fiber Polyester
4443	E-99	53	RGS conduit	0.00	879.42	Pull rope	Soft-Fiber Polyester
4444	E-99	53	RGS conduit	0.00	879.42	Pull rope	Soft-Fiber Polyester
4445	E-99	41	RGS conduit	0.00	534.55	Pull rope	Soft-Fiber Polyester
4446	E-99	41	RGS conduit	0.00	534.55	Pull rope	Soft-Fiber Polyester
4447	E-99	41	RGS conduit	0.00	534.55	Pull rope	Soft-Fiber Polyester
4448	E-99	41	RGS conduit	0.00	534.55	Pull rope	Soft-Fiber Polyester
4449	E-98	53	RGS conduit	0.00	879.42	Pull rope	Soft-Fiber Polyester
4450	E-98	53	RGS conduit	0.00	879.42	Pull rope	Soft-Fiber Polyester
4451	E-99	41	RGS conduit	0.00	534.55	Pull rope	Soft-Fiber Polyester
4452	E-99	41	RGS conduit	0.00	534.55	Pull rope	Soft-Fiber Polyester
4453	E-99	41	RGS conduit	440.31	534.55	Pull rope	Soft-Fiber Polyester
						UP108-2 (2)	1-2/C + gnd #8, 600 V, EPR insulation
						A-3006-2	3 + 1 gnd #6,#8, 600 V, RHH/RHW insulation
4454	E-99	41	RGS conduit	0.00	534.55	Pull rope	Soft-Fiber Polyester
4455	E-99	53	RGS conduit	593.56	879.42	UP108-2 (2)	1-2/C + gnd #8, 600 V, EPR insulation
						A-3006-1	1-3/C + gnd #4, 600 V, EPR insulation
						Pull rope	Soft-Fiber Polyester
4456	E-99	53	RGS conduit	0.00	879.42	Pull rope	Soft-Fiber Polyester
4457	E-99	41	RGS conduit	98.10	534.55	Pull rope	Soft-Fiber Polyester
						1144	1 - 2 pair, shielded #18 with IS/OA , 300 V, PVC jacket
4458	E-99	41	RGS conduit	0.00	534.55	Pull rope	Soft-Fiber Polyester
4459	E-99	41	RGS conduit	227.46	534.55	Pull rope	Soft-Fiber Polyester
						UP108-4 (2)	1-2/C + gnd #8, 600 V, EPR insulation
4460	E-99	41	RGS conduit	0.00	534.55	Pull rope	Soft-Fiber Polyester
4461	E-99	53	RGS conduit	227.46	879.42	Pull rope	Soft-Fiber Polyester
						UP108-4 (2)	1-2/C + gnd #8, 600 V, EPR insulation
4462	E-99	53	RGS conduit	0.00	879.42	Pull rope	Soft-Fiber Polyester
4463	E-99	41	RGS conduit	98.10	534.55	1145	1 - 2 pair, shielded #18 with IS/OA , 300 V, PVC jacket
						Pull rope	Soft-Fiber Polyester
4464	E-99	41	RGS conduit	0.00	534.55	Pull rope	Soft-Fiber Polyester
4465	E-99	78	RGS conduit	648.58	1935.24	A-1013-2	1-3/C + gnd #6, 600 V, EPR insulation
						A-1013-2	1-3/C + gnd #6, 600 V, EPR insulation
						Pull rope	Soft-Fiber Polyester
4466	E-119	53	RGS conduit	0.00	879.42	Pull rope	Soft-Fiber Polyester
4471	E-99	41	RGS conduit	0.00	534.55	Pull rope	Soft-Fiber Polyester
4472	E-99	41	RGS conduit	0.00	534.55	Pull rope	Soft-Fiber Polyester
4473	E-99	53	RGS conduit	0.00	879.42	Pull rope	Soft-Fiber Polyester
4474	E-99	53	RGS conduit	0.00	879.42	Pull rope	Soft-Fiber Polyester

REQUEST FOR INFORMATION NOT ADDRESSED IN THIS CCO REMAIN IN FORCE

MARK	DATE	DESCRIPTIONS	BY	CH'D	CCO#
		REVISIONS			
2	03/04/08	BARRIER MODIFICATIONS	TW	RG	44
1	02/19/08	ELECTRICAL MODIFICATIONS	MP EL	RR	42

CONTRACT CHANGE ORDER NO._____
SHEET_____ OF _____

FOR REVISION ONLY

Caltrans Metric

DIST	COUNTY	ROUTE	KILOMETER POST TOTAL PROJECT	SHEET NO	TOTAL SHEETS
04	SF	80	13.2/13.9	392 R2	1204

REGISTERED ELECTRICAL ENGINEER — 12/19/02 DATE

12-6-04
PLANS APPROVAL DATE

JENS ERLINGSSON No. 8249 Exp. 9/30/06 ELECTRICAL — REGISTERED PROFESSIONAL ENGINEER — STATE OF CALIFORNIA

S. A. ESTOQUE, JR No. E-10151 Exp. 12/31/2008 ELECTRICAL — REGISTERED PROFESSIONAL ENGINEER — STATE OF CALIFORNIA

PB POWER, Inc.
A Parsons Brinckerhoff Company
303 Second St., Suite 700N
San Francisco, CA 94107-1317

The State of California or its officers or agents shall not be responsible for the accuracy or completeness of electronic copies of this plan sheet.

Caltrans now has a web site! To get to the web site, go to http://www.dot.ca.gov

CONDUIT DATA

Conduit No	Reference	Size	Type	Total Fill (mm²)	Allowable Fill (mm²)	Included Cable No.	Conductor Type
4475	E-99	41	RGS conduit	0.00	534.55	Pull rope	Soft-Fiber Polyester
4476	E-99	41	RGS conduit	0.00	534.55	Pull rope	Soft-Fiber Polyester
4477	E-99	41	RGS conduit	227.46	534.55	UP107-3	1-2/C + gnd #8, 600 V, EPR insulation
						Pull rope	Soft-Fiber Polyester
4478	E-99	41	RGS conduit	126.88	534.55	Pull rope	Soft-Fiber Polyester
						UP207-1	1-2/C + gnd #10, 600 V, EPR insulation
4479	E-99	53	RGS conduit	0.00	879.42	Pull rope	Soft-Fiber Polyester
4480	E-99	53	RGS conduit	126.88	879.42	UP207-1	1-2/C + gnd #10, 600 V, EPR insulation
						Pull rope	Soft-Fiber Polyester
4481	E-99	41	RGS conduit	0.00	534.55	Pull rope	Soft-Fiber Polyester
4482	E-99	41	RGS conduit	0.00	534.55	Pull rope	Soft-Fiber Polyester
4483	E-99	41	RGS conduit	0.00	534.55	Pull rope	Soft-Fiber Polyester
4484	E-99	41	RGS conduit	0.00	534.55	Pull rope	Soft-Fiber Polyester
4485	E-99	53	RGS conduit	0.00	879.42	Pull rope	Soft-Fiber Polyester
4486	E-99	53	RGS conduit	0.00	879.42	Pull rope	Soft-Fiber Polyester
4487	E-99	41	RGS conduit	0.00	534.55	Pull rope	Soft-Fiber Polyester
4488	E-99	41	RGS conduit	0.00	534.55	Pull rope	Soft-Fiber Polyester
4489	E-99	41	RGS conduit	0.00	534.55	Pull rope	Soft-Fiber Polyester
4490	E-99	41	RGS conduit	0.00	534.55	Pull rope	Soft-Fiber Polyester
4491	E-99	53	RGS conduit	690.39	879.42	S-1031-3	1-3/C + gnd #4, 600 V, EPR insulation
						A-1035-3	1-3/C + gnd #6, 600 V, EPR insulation
						Pull rope	Soft-Fiber Polyester
4492	E-99	53	RGS conduit	481.21	879.42	Pull rope	Soft-Fiber Polyester
						A-1035-4	3 + 1 gnd #6, #8, 600 V, RHH/RHW insulation
						S-1031-4	3 + 1 gnd #4, #8, 600 V, RHH/RHW insulation
4493	E-99	41	RGS conduit	0.00	534.55	Pull rope	Soft-Fiber Polyester
4494	E-99	41	RGS conduit	0.00	534.55	Pull rope	Soft-Fiber Polyester
4501	E-101	53	RGS conduit	0.00	879.42	Pull rope	Soft-Fiber Polyester
4502	E-101	53	RGS conduit	0.00	879.42	Pull rope	Soft-Fiber Polyester
4503	E-101	53	RGS conduit	0.00	879.42	Pull rope	Soft-Fiber Polyester
4504	E-101	53	RGS conduit	0.00	879.42	Pull rope	Soft-Fiber Polyester

For continuation, see next sheet.

CONDUIT AND TRAY SCHEDULE

E-437

DATE	REVISED BY	DATE REVISED
8/02	AB	8/02

CALCULATED/DESIGNED BY: PBP
CHECKED BY:

DESIGN OVERSIGHT: BEHZAD GOLEMOHAMMADI

STATE OF CALIFORNIA - DEPARTMENT OF TRANSPORTATION
Caltrans

LAST REVISION: 00-00-00
DATE PLOTTED => 5/22/2008
TIME PLOTTED => 11:16:02 AM

FOR REDUCED PLANS ORIGINAL SCALE IS IN MILLIMETERS 0 20 40 60 80

DGN FILE => T:\13103\MS\pse\SAS Struc\CCO\SAS CC044\04-0120F1_0392R02.dgn
USERNAME => tlorico

CU 04251 | EA 0120F1

CONDUIT DATA

Conduit No	Reference	Size	Type	Total Fill (mm²)	Allowable Fill (mm²)	Included Cable No.	Conductor Type
4505	E-100	41	RGS conduit	0.00	534.55	Pull rope	Soft-Fiber Polyester
4506	E-100	41	RGS conduit	0.00	534.55	Pull rope	Soft-Fiber Polyester
4507	E-101	41	RGS conduit	0.00	534.55	Pull rope	Soft-Fiber Polyester
4508	E-99	41	RGS conduit	0.00	534.55	Pull rope	Soft-Fiber Polyester
4509	E-99	53	RGS conduit	0.00	879.42	Pull rope	Soft-Fiber Polyester
4510	E-99	53	RGS conduit	0.00	879.42	Pull rope	Soft-Fiber Polyester
4511	E-100	41	RGS conduit	0.00	534.55	Pull rope	Soft-Fiber Polyester
4512	E-100	41	RGS conduit	0.00	534.55	Pull rope	Soft-Fiber Polyester
4513	E-100	41	RGS conduit	0.00	534.55	Pull rope	Soft-Fiber Polyester
4514	E-100	41	RGS conduit	0.00	534.55	Pull rope	Soft-Fiber Polyester
4515	E-100	53	RGS conduit	0.00	879.42	Pull rope	Soft-Fiber Polyester
4516	E-100	53	RGS conduit	0.00	879.42	Pull rope	Soft-Fiber Polyester
4517	E-100	41	RGS conduit	0.00	534.55	Pull rope	Soft-Fiber Polyester
4518	E-100	41	RGS conduit	0.00	534.55	Pull rope	Soft-Fiber Polyester
4519	E-100	41	RGS conduit	0.00	534.55	Pull rope	Soft-Fiber Polyester
4520	E-100	41	RGS conduit	0.00	534.55	Pull rope	Soft-Fiber Polyester
4521	E-100	53	RGS conduit	481.21	879.42	Pull rope	Soft-Fiber Polyester
						S-1031-4	3 + 1 gnd #4, #8, 600 V, RHH/RHW insulation
						A-1035-4	3 + 1 gnd #6, #8, 600 V, RHH/RHW insulation
4522	E-100	53	RGS conduit	176.28	879.42	Pull rope	Soft-Fiber Polyester
						A-1035-4	3 + 1 gnd #6, #8, 600 V, RHH/RHW insulation
4523	E-100	41	RGS conduit	0.00	534.55	Pull rope	Soft-Fiber Polyester
4524	E-100	41	RGS conduit	0.00	534.55	Pull rope	Soft-Fiber Polyester
4525	E-100	53	RGS conduit	324.29	879.42	A-1013-2	1-3/C + gnd #6, 600 V, EPR insulation
						Pull rope	Soft-Fiber Polyester
4526	E-100	53	RGS conduit	648.58	879.42	A-1014-2	1-3/C + gnd #6, 600 V, EPR insulation
						Pull rope	Soft-Fiber Polyester
						A-1014-2	1-3/C + gnd #6, 600 V, EPR insulation
4527	E-100	41	RGS conduit	0.00	534.55	Pull rope	Soft-Fiber Polyester
4528	E-100	41	RGS conduit	0.00	534.55	Pull rope	Soft-Fiber Polyester
4530	E-100	53	RGS conduit	0.00	879.42	Pull rope	Soft-Fiber Polyester
4531	E-100	41	RGS conduit	0.00	534.55	Pull rope	Soft-Fiber Polyester
4532	E-100	41	RGS conduit	0.00	534.55	Pull rope	Soft-Fiber Polyester
4533	E-100	53	RGS conduit	0.00	879.42	Pull rope	Soft-Fiber Polyester
4534	E-100	53	RGS conduit	0.00	879.42	Pull rope	Soft-Fiber Polyester
4535	E-100	41	RGS conduit	0.00	534.55	Pull rope	Soft-Fiber Polyester
4536	E-100	41	RGS conduit	0.00	534.55	Pull rope	Soft-Fiber Polyester
4537	E-100	41	RGS conduit	0.00	534.55	Pull rope	Soft-Fiber Polyester
4538	E-100	41	RGS conduit	0.00	534.55	Pull rope	Soft-Fiber Polyester
4539	E-100	53	RGS conduit	0.00	879.42	Pull rope	Soft-Fiber Polyester
4540	E-100	53	RGS conduit	0.00	879.42	Pull rope	Soft-Fiber Polyester
4541	E-100	41	RGS conduit	0.00	534.55	Pull rope	Soft-Fiber Polyester
4542	E-100	41	RGS conduit	0.00	534.55	Pull rope	Soft-Fiber Polyester
4543	E-100	41	RGS conduit	227.46	534.55	Pull rope	Soft-Fiber Polyester (2)

REQUEST FOR INFORMATION NOT ADDRESSED IN THIS CCO REMAIN IN FORCE

REVISIONS

MARK	DATE	DESCRIPTIONS	BY	CH'D	CCO#
2	03/04/08	BARRIER MODIFICATIONS	JS BM	RG SE	44
1	02/19/08	ELECTRICAL MODIFICATIONS	MP EL	RR	42

CONTRACT CHANGE ORDER NO._____
SHEET_____ OF _____

FOR REVISION ONLY

REGISTERED PROFESSIONAL ENGINEER — S. A. ESTOQUE, JR — No. E-10151 — Exp. 12/31/2008 ELECTRICAL — STATE OF CALIFORNIA

Caltrans Metric

DIST	COUNTY	ROUTE	KILOMETER POST TOTAL PROJECT	SHEET No	TOTAL SHEETS
04	SF	80	13.2/13.9	393 R2	1204

Jens Erlingsson 12/19/02
REGISTERED ELECTRICAL ENGINEER DATE

REGISTERED PROFESSIONAL ENGINEER — JENS ERLINGSSON — No. 8249 — Exp. 9/30/06 ELECTRICAL — STATE OF CALIFORNIA

12-6-04
PLANS APPROVAL DATE

PB POWER, Inc.
A Parsons Brinckerhoff Company
303 Second St., Suite 700N
San Francisco, CA 94107-1317

The State of California or its officers or agents shall not be responsible for the accuracy or completeness of electronic copies of this plan sheet.

Caltrans now has a web site! To get to the web site, go to http://www.dot.ca.gov

CONDUIT DATA

Conduit No	Reference	Size	Type	Total Fill (mm²)	Allowable Fill (mm²)	Included Cable No.	Conductor Type
4544	E-100	41	RGS conduit	0.00	534.55	Pull rope	Soft-Fiber Polyester
4545	E-100	53	RGS conduit	0.00 (2)	879.42	Pull rope	Soft-Fiber Polyester (2)
4546	E-100	53	RGS conduit	0.00	879.42	Pull rope	Soft-Fiber Polyester
4547	E-100	41	RGS conduit	0.00 (2)	534.55	Pull rope	Soft-Fiber Polyester (2)
4548	E-100	41	RGS conduit	0.00	534.55	Pull rope	Soft-Fiber Polyester
4549	E-100	41	RGS conduit	537.14 (2)	534.55	Pull rope	Soft-Fiber Polyester
						1106	1-3/C + gnd #6, 600 V, EPR insulation
						S-1032-2	3 + 1 gnd #6, #8, 600 V, RHH/RHW insulation
4550	E-100	41	RGS conduit	227.46 (2)	534.55	UP108-3	1-2/C + gnd #8, 600 V, EPR insulation
						Pull rope	Soft-Fiber Polyester (2)
4551	E-100	53	RGS conduit	690.39	879.42	S-1032-1	1-3/C + gnd #4, 600 V, EPR insulation
						1106	1-3/C + gnd #6, 600 V, EPR insulation
						Pull rope	Soft-Fiber Polyester
4552	E-100	53	RGS conduit	227.46 (2)	879.42	UP108-3	1-2/C + gnd #8, 600 V, EPR insulation
						Pull rope	Soft-Fiber Polyester (2)
4553	E-100	41	RGS conduit	0.00 (2)	534.55	Pull rope	Soft-Fiber Polyester (2)
4554	E-100	41	RGS conduit	0.00	534.55	Pull rope	Soft-Fiber Polyester
4555	E-100	53	RGS conduit	648.58	879.42	Pull rope	Soft-Fiber Polyester
						A-1014-2	1-3/C + gnd #6, 600 V, EPR insulation
						A-1014-2	1-3/C + gnd #6, 600 V, EPR insulation
4556	E-100	103	RGS conduit	0.00	2576.49	Pull rope	Soft-Fiber Polyester
4557	E-101	53	RGS conduit	0.00	879.42	Pull rope	Soft-Fiber Polyester
4558	E-101	53	RGS conduit	0.00	879.42	Pull rope	Soft-Fiber Polyester
4749	E-99	53	RGS conduit	227.46	879.42	Pull rope	Soft-Fiber Polyester
						UP107-3	1-2/C + gnd #8, 600 V, EPR insulation
5001	E-71	78	RGS-PVC coated conduit	98.42	1935.24	UP205-5	2 + 1 gnd #12,#12, 600 V, RHH/RHW insulation
						UP204-5	2 + 1 gnd #12,#12, 600 V, RHH/RHW insulation
						Pull rope	Soft-Fiber Polyester

For continuation, see next sheet.

CONDUIT AND TRAY SCHEDULE

E-438

DATE	REVISED BY	DATE REVISED
8/02	PBP	AB

CALCULATED/DESIGNED BY — CHECKED BY

DESIGN OVERSIGHT — BEHZAD GOLEMOHAMMADI

STATE OF CALIFORNIA - DEPARTMENT OF TRANSPORTATION — Caltrans

FOR REDUCED PLANS ORIGINAL SCALE IS IN MILLIMETERS 0 20 40 60 80

DGN FILE => T:\13103\MS\pse\SAS Struc\CCO\SAS CCO44\04-0120F1_0393R02.dgn
USERNAME => florico

CU 04251 | EA 0120F1

LAST REVISION 00-00-00

DATE PLOTTED => 5/22/2008
TIME PLOTTED => 11:16:21 AM

CONDUIT DATA

Conduit No	Reference	Size	Type	Total Fill (mm²)	Allowable Fill (mm²)	Included Cable No.	Conductor Type
5002	E-71	78	RGS-PVC coated conduit	0.00	1935.24	Pull rope	Soft-Fiber Polyester
5003	E-71	78	RGS-PVC coated conduit	0.00	1935.24	Pull rope	Soft-Fiber Polyester
5004	E-71	78	RGS-PVC coated conduit	648.58	1935.24	Pull rope	Soft-Fiber Polyester
						LP219-2,4	1-3/C + gnd #6, 600 V, EPR insulation
						LP219-6,8	1-3/C + gnd #6, 600 V, EPR insulation
5005	E-71	78	RGS-PVC coated conduit	0.00	1935.24	Pull rope	Soft-Fiber Polyester
5006	E-71	53	RGS-PVC coated conduit	0.00	879.42	Pull rope	Soft-Fiber Polyester
5007	E-114	78	RGS-PVC coated conduit	150.44	1935.24	MVDSE01A	MVDS DLC
						Pull rope	Soft-Fiber Polyester
5026	E-72	78	RGS-PVC coated conduit	205.22	1935.24	UP205-9	1-2/C + gnd #12, 600 V, EPR insulation
						UP205-11	1-2/C + gnd #12, 600 V, EPR insulation
						Pull rope	Soft-Fiber Polyester
5027	E-72	78	RGS-PVC coated conduit	0.00	1935.24	Pull rope	Soft-Fiber Polyester
5028	E-72	78	RGS-PVC coated conduit	0.00	1935.24	Pull rope	Soft-Fiber Polyester
5029	E-72	78	RGS-PVC coated conduit	648.58	1935.24	LP220-2,4	1-3/C + gnd #6, 600 V, EPR insulation
						Pull rope	Soft-Fiber Polyester
						LP220-6,8	1-3/C + gnd #6, 600 V, EPR insulation
5030	E-72	53	RGS-PVC coated conduit	0.00	879.42	Pull rope	Soft-Fiber Polyester
5031	E-72	53	RGS-PVC coated conduit	0.00	879.42	Pull rope	Soft-Fiber Polyester
5032	E-115	78	RGS-PVC coated conduit	160.17 △1	1935.24	2910-11	1-3/C #16, 600 V, EPR insulation △1
						2155	1-2 pair, shielded #18 with IS/OA, 300V, PVC jacket
						Pull rope	Soft-Fiber Polyester
5035	E-72	53	RGS-PVC coated conduit	0.00	879.42	Pull rope	Soft-Fiber Polyester
5051	E-73	78	RGS-PVC coated conduit	49.21	1935.24	Pull rope	Soft-Fiber Polyester
						UP206-5	2+1gnd #12,#12, 600 V, RHH/RHW insulation
5052	E-73	78	RGS-PVC coated conduit	0.00	1935.24	Pull rope	Soft-Fiber Polyester
5053	E-73	78	RGS-PVC coated conduit	227.46	1935.24	UP206-9	1-2/C + gnd #8, 600 V, EPR insulation
						Pull rope	Soft-Fiber Polyester
5054	E-73	78	RGS-PVC coated conduit	648.58	1935.24	Pull rope	Soft-Fiber Polyester
						LP221-6,8	1-3/C + gnd #6, 600 V, EPR insulation
						LP221-2,4	1-3/C + gnd #6, 600 V, EPR insulation
5055	E-73	78	RGS-PVC coated conduit	0.00	1935.24	Pull rope	Soft-Fiber Polyester
5056	E-73	78	RGS-PVC coated conduit	0.00	1935.24	Pull rope	Soft-Fiber Polyester
5057	E-116	78	RGS-PVC coated conduit	324.26	1935.24	Pull rope	Soft-Fiber Polyester
						CCTVE01AD	TVL
						MVDSE02A	MVDS DLC
						CCTVE01AC	TVC
5058	E-73	78	RGS-PVC coated conduit	0.00	1935.24	Pull rope	Soft-Fiber Polyester
5076	E-74	78	RGS-PVC coated conduit	49.21	1935.24	UP207-5	2 + 1 gnd #12,#12, 600 V, RHH/RHW insulation
						Pull rope	Soft-Fiber Polyester
5077	E-74	78	RGS-PVC coated conduit	0.00	1935.24	Pull rope	Soft-Fiber Polyester
5078	E-74	78	RGS-PVC coated conduit	0.00	1935.24	Pull rope	Soft-Fiber Polyester
5079	E-74	78	RGS-PVC coated conduit	648.58	1935.24	LP222-6,8	1-3/C + gnd #6, 600 V, EPR insulation
						Pull rope	Soft-Fiber Polyester
						LP222-2,4	1-3/C + gnd #6, 600 V, EPR insulation
5080	E-74	78	RGS-PVC coated conduit	0.00	1935.24	Pull rope	Soft-Fiber Polyester
5081	E-74	78	RGS-PVC coated conduit	0.00	1935.24	Pull rope	Soft-Fiber Polyester
5082	E-117	78	RGS-PVC coated conduit	150.44	1935.24	Pull rope	Soft-Fiber Polyester
						MVDSE03A	MVDS DLC

REQUEST FOR INFORMATION NOT ADDRESSED IN THIS CCO REMAIN IN FORCE

MARK	DATE	REVISIONS DESCRIPTIONS	BY	CH'D	CCO#
△1	03/04/08	BARRIER MODIFICATIONS	JS BM	RG SE	44

CONTRACT CHANGE ORDER NO._____
SHEET_____ OF_____

FOR REVISION ONLY

S. A. ESTOQUE, JR. — No. E-10151 — Exp. 12/31/2008 ELECTRICAL — REGISTERED PROFESSIONAL ENGINEER — STATE OF CALIFORNIA

Caltrans Metric

DIST	COUNTY	ROUTE	KILOMETER POST TOTAL PROJECT	SHEET NO	TOTAL SHEETS
04	SF	80	13.2/13.9	394 R1	1204

Jens Erlingsson 12/19/02
REGISTERED ELECTRICAL ENGINEER DATE

JENS ERLINGSSON No. 8249 Exp. 9/30/06 ELECTRICAL — REGISTERED PROFESSIONAL ENGINEER — STATE OF CALIFORNIA

12-6-04
PLANS APPROVAL DATE

PB POWER, Inc.
A Parsons Brinckerhoff Company
303 Second St., Suite 700N
San Francisco, CA 94107-1317

The State of California or its officers or agents shall not be responsible for the accuracy or completeness of electronic copies of this plan sheet.

Caltrans now has a web site! To get to the web site, go to http://www.dot.ca.gov

CONDUIT DATA

Conduit No	Reference	Size	Type	Total Fill (mm²)	Allowable Fill (mm²)	Included Cable No.	Conductor Type
5101	E-75	78	RGS-PVC coated conduit	481.89	1935.24	UP208-5	2 + 1 gnd #12,#12, 600 V, RHH/RHW insulation
						UP208-11	1-3/C #12, 600 V, EPR insulation
						UP208-15	1-2/C + gnd #8, 600 V, EPR insulation
						UP208-9	1-2/C + gnd #12, 600 V, EPR insulation
						Pull rope	Soft-Fiber Polyester
5102	E-75	78	RGS-PVC coated conduit	0.00	1935.24	Pull rope	Soft-Fiber Polyester
5103	E-75	78	RGS-PVC coated conduit	0.00	1935.24	Pull rope	Soft-Fiber Polyester
5104	E-75	78	RGS-PVC coated conduit	648.58	1935.24	LP223-2,4	1-3/C + gnd #6, 600 V, EPR insulation
						LP223-6,8	1-3/C + gnd #6, 600 V, EPR insulation
						Pull rope	Soft-Fiber Polyester
5105	E-75	78	RGS-PVC coated conduit	0.00	1935.24	Pull rope	Soft-Fiber Polyester
5106	E-75	53	RGS-PVC coated conduit	0.00	879.42	Pull rope	Soft-Fiber Polyester
5107	E-118	78	RGS-PVC coated conduit	212.85 △1	1935.24	2154	1 - 2 pair, shielded #18 with IS/OA, 300 V, PVC jacket △1
						Pull rope	Soft-Fiber Polyester △1
5201	E-114	78	RGS conduit	648.58	1935.24	Pull rope	Soft-Fiber Polyester
						LP219-2,4	1-3/C + gnd #6, 600 V, EPR insulation
						LP219-6,8	1-3/C + gnd #6, 600 V, EPR insulation
5202	E-114	78	RGS conduit	0.00	1935.24	Pull rope	Soft-Fiber Polyester
5203	E-114	78	RGS conduit	1108.98	1935.24	UP204-8	1-2/C + gnd #8, 600 V, EPR insulation
						UP204-7	1-2/C + gnd #8, 600 V, EPR insulation
						UP204-1	1-2/C + gnd #10,600 V, EPR insulation
						2095	1-3/C + gnd #2, 600 V, EPR insulation
						Pull rope	Soft-Fiber Polyester
5204	E-114	78	RGS conduit	0.00	1935.24	Pull rope	Soft-Fiber Polyester
5205	E-114	78	RGS conduit	527.18	1935.24	Pull rope	Soft-Fiber Polyester
						2103	1-3/C + gnd #2, 600 V, EPR insulation
5206	E-114	78	RGS conduit	1201.71	1935.24	1474-4	50 pair #18, shielded pairs, IS/OS shield 600 V, XLPE insul., PVC jacket
						Pull rope	Soft-Fiber Polyester
5207	E-114	78	RGS conduit	1352.15	1935.24	MVDSE01A	MVDS DLC
						1474-5	50 pair #18, shielded pairs, IS/OS shield 600 V, XLPE insul., PVC jacket
						Pull rope	Soft-Fiber Polyester
5208	E-114	78	RGS-PVC coated conduit	30.19	1935.24	2475-3A	12 Fiber, single mode fiberoptic cable
						Pull rope	Soft-Fiber Polyester
5209	E-114	53	RGS-PVC coated conduit	0.00	879.42	Pull rope	Soft-Fiber Polyester

For continuation, see next sheet.

CONDUIT AND TRAY SCHEDULE

E-439

DATE	REVISED BY	DATE REVISED
8/02	AB	8/02

CALCULATED/DESIGNED BY: PBP
CHECKED BY: AB

DESIGN OVERSIGHT: BEHZAD GOLEMOHAMMADI

STATE OF CALIFORNIA - DEPARTMENT OF TRANSPORTATION
Caltrans

LAST REVISION 00-00-00
DATE PLOTTED = 5/22/2008
TIME PLOTTED = 11:16:39 AM

FOR REDUCED PLANS ORIGINAL SCALE IS IN MILLIMETERS 0 20 40 60 80

DGN FILE = T:\13103\MS\pse\SAS Struc\CCO\SAS CC044\04-0120f1_0394R01.dgn
USERNAME = llorico

CU 04251 EA 0120F1

DIST	COUNTY	ROUTE	KILOMETER POST TOTAL PROJECT	SHEET NO	TOTAL SHEETS
04	SF	80	13.2/13.9	395 R1	1204

Jens Erlingsson 12/19/02
REGISTERED ELECTRICAL ENGINEER DATE

12-6-04
PLANS APPROVAL DATE

REGISTERED PROFESSIONAL ENGINEER — JENS ERLINGSON No. 8249 Exp. 9/30/06 ELECTRICAL — STATE OF CALIFORNIA

PB POWER, Inc.
A Parsons Brinckerhoff Company
303 Second St., Suite 700N
San Francisco, CA 94107-1317

The State of California or its officers or agents shall not be responsible for the accuracy or completeness of electronic copies of this plan sheet.

Caltrans now has a web site! To get to the web site, go to http://www.dot.ca.gov

REQUEST FOR INFORMATION NOT ADDRESSED IN THIS CCO REMAIN IN FORCE

MARK	DATE	DESCRIPTIONS	BY	CH'D	CCO#
		REVISIONS			
1	03/04/08	BARRIER MODIFICATIONS	JS BM	RG SE	44

REGISTERED PROFESSIONAL ENGINEER — S. A. ESTOQUE, JR. No. E-10151 Exp. 12/31/2008 ELECTRICAL — STATE OF CALIFORNIA

CONTRACT CHANGE ORDER NO._____
SHEET_____ OF _____

FOR REVISION ONLY

CONDUIT DATA

Conduit No	Reference	Size	Type	Total Fill (mm²)	Allowable Fill (mm²)	Included Cable No.	Conductor Type
5210	E-114	78	RGS-PVC coated conduit	1323.45	1935.24	Pull rope	Soft-Fiber Polyester
						2119-2	4 pair #22, shielded pairs, 300 V, PE insulation
						1473-5	50 pair #18, shielded pairs, IS/OS shield 600 V, XLPE insul., PVC jacket
5211	E-114	78	RGS-PVC coated conduit	0.00	1935.24	Pull rope	Soft-Fiber Polyester
5221	E-115	78	RGS conduit	272.97	1935.24	2202-2	1-3/C #14, 600 V, EPR insulation
						Pull rope	Soft-Fiber Polyester
						2202-3	1-7/C #16, 600 V, EPR insulation
						2202-4	1-3/C #14, 600 V, EPR insulation
5222	E-115	78	RGS conduit	1211.54	1935.24	LP220-2,4	1-3/C + gnd #6, 600 V, EPR insulation
						2121-1	1-3/C #14, 600 V, EPR insulation
						LP220-6,8	1-3/C + gnd #6, 600 V, EPR insulation
						Pull rope	Soft-Fiber Polyester
						S-3056-6	1-4/C #14, 600 V, EPR insulation
						2120-2	1-3/C #14, 600 V, EPR insulation
						2120-1	1-3/C #14, 600 V, EPR insulation
						2204-2	1-3/C #16, 600 V, EPR insulation
						2204-1	1-3/C #16, 600 V, EPR insulation
						2121-4	1-3/C #14, 600 V, EPR insulation
5223	E-115	78	RGS conduit	1235.86	1935.24	UP205-1	1-2/C + gnd #10 ,600 V, EPR insulation
						Pull rope	Soft-Fiber Polyester
						UP206-1	1-2/C + gnd #10 ,600 V, EPR insulation
						UP205-8	1-2/C + gnd #8, 600 V, EPR insulation
						2096	1-3/C + gnd #2, 600 V, EPR insulation
						UP205-7	1-2/C + gnd #8, 600 V, EPR insulation
5224	E-115	78	RGS conduit	227.46 (1)	1935.24	Pull rope	Soft-Fiber Polyester
						UP205-6	1-2/C + gnd #8, 600 V, EPR insulation (1)
5225	E-115	78	RGS conduit	527.18	1935.24	Pull rope	Soft-Fiber Polyester
						2104	1-3/C + gnd #2, 600 V, EPR insulation (1)
5226	E-115	78	RGS conduit	1361.88 (1)	1935.24		
						2910-11	1-3/C #16, 600 V, EPR insulation
						1474-5	50 pair #18, shielded pairs, IS/OS shield 600 V, XLPE insul., PVC jacket (1)
						2155	1-2 pair, shielded #18 with IS/OA, 300V PVC jacket
						Pull rope	Soft-Fiber Polyester
5227	E-115	78	RGS conduit	1201.71	1935.24	Pull rope	Soft-Fiber Polyester
						1474-6	50 pair #18, shielded pairs, IS/OS shield 600 V, XLPE insul., PVC jacket
5228	E-115	78	RGS-PVC coated conduit	1445.19	1935.24	2910-10	4 pair #22, shielded pairs, 300 V, PE insulation
						Pull rope	Soft-Fiber Polyester
						1473-5	50 pair #18, shielded pairs, IS/OS shield 600 V, XLPE insul., PVC jacket
						2910-12	4 pair #22, shielded pairs, 300 V, PE insulation
5229	E-115	78	RGS-PVC coated conduit	317.80	1935.24	1474-5A	1 - 6 pair, shielded #18 with overall shield, 300 V, PVC jacket
						Pull rope	Soft-Fiber Polyester
						1474-5B	1 - 6 pair, shielded #18 with overall shield, 300 V, PVC jacket
5230	E-114	78	RGS-PVC coated conduit	0.00	1935.24	Pull rope	Soft-Fiber Polyester
5231	E-114	78	RGS-PVC coated conduit	0.00	1935.24	Pull rope	Soft-Fiber Polyester
5232	E-114	78	RGS-PVC coated conduit	1201.71	1935.24	1473-4	50 pair #18, shielded pairs, IS/OS shield 600 V, XLPE insul., PVC jacket
						Pull rope	Soft-Fiber Polyester
5233	E-115	78	RGS-PVC coated conduit	0.00	1935.24	Pull rope	Soft-Fiber Polyester
5234	E-115	78	RGS-PVC coated conduit	0.00	1935.24	Pull rope	Soft-Fiber Polyester
5235	E-115	78	RGS-PVC coated conduit	1201.71	1935.24	Pull rope	Soft-Fiber Polyester
						1473-6	50 pair #18, shielded pairs, IS/OS shield 600 V, XLPE insul., PVC jacket

CONDUIT DATA

Conduit No	Reference	Size	Type	Total Fill (mm²)	Allowable Fill (mm²)	Included Cable No.	Conductor Type
5236	E-116	78	RGS-PVC coated conduit	0.00	1935.24	Pull rope	Soft-Fiber Polyester
5237	E-116	78	RGS-PVC coated conduit	0.00	1935.24	Pull rope	Soft-Fiber Polyester
5238	E-116	78	RGS-PVC coated conduit	1201.71	1935.24	1473-6	50 pair #18, shielded pairs, IS/OS shield 600 V, XLPE insul., PVC jacket
						Pull rope	Soft-Fiber Polyester
5241	E-116	78	RGS conduit	1027.61	1935.24	2202-3	1-7/C #16, 600 V, EPR insulation
						2202-2	1-3/C #14, 600 V, EPR insulation
						2202-4	1-3/C #14, 600 V, EPR insulation
						2105	1-3/C + gnd #2, 600 V, EPR insulation
						2202-1	1-2/C + gnd #8, 600 V, EPR insulation
						Pull rope	Soft-Fiber Polyester
5242	E-116	78	RGS conduit	192.40	1935.24	Pull rope	Soft-Fiber Polyester
						CCTVE01AB	TVCP
						CCTVE01AA	TVP
5243	E-116	78	RGS conduit	982.10	1935.24	Pull rope	Soft-Fiber Polyester
						UP206-7	1-2/C + gnd #8, 600 V, EPR insulation
						UP206-8	1-2/C + gnd #8, 600 V, EPR insulation
						2097	1-3/C + gnd #2, 600 V, EPR insulation
5244	E-116	78	RGS conduit	648.58	1935.24	Pull rope	Soft-Fiber Polyester
						LP221-2,4	1-3/C + gnd #6, 600 V, EPR insulation
						LP221-6,8	1-3/C + gnd #6, 600 V, EPR insulation
5245	E-116	78	RGS-PVC coated conduit	727.89	1935.24	2202-1	1-2/C + gnd #8, 600 V, EPR insulation
						2202-2	1-3/C #14, 600 V, EPR insulation
						UP206-9	1-2/C + gnd #8, 600 V, EPR insulation
						2202-4	1-3/C #14, 600 V, EPR insulation
						2204-3	1-7/C #16, 600 V, EPR insulation
						Pull rope	Soft-Fiber Polyester
5246	E-116	78	RGS conduit	1201.71	1935.24	1474-6	50 pair #18, shielded pairs, IS/OS shield 600 V, XLPE insul., PVC jacket
						Pull rope	Soft-Fiber Polyester
5247	E-116	78	RGS conduit	1525.97	1935.24	Pull rope	Soft-Fiber Polyester
						MVDSE02A	MVDS DLC
						CCTVE01AD	TVL
						CCTVE01AC	TVC
						1474-7	50 pair #18, shielded pairs, IS/OS shield 600 V, XLPE insul., PVC jacket
5249	E-116	78	RGS-PVC coated conduit	30.19	1935.24	2475-3B	12 Fiber, single mode fiberoptic cable
						Pull rope	Soft-Fiber Polyester
5250	E-116	78	RGS-PVC coated conduit	1201.71	1935.24	1473-7	50 pair #18, shielded pairs, IS/OS shield 600 V, XLPE insul., PVC jacket
						Pull rope	Soft-Fiber Polyester

For continuation, see next sheet.

CONDUIT AND TRAY SCHEDULE

E-440

CALCULATED/ DESIGNED BY	CHECKED BY	DATE	REVISED BY	DATE REVISED
PBP	AB	8/02		8/02

DESIGN OVERSIGHT
BEHZAD GOLEMOHAMMADI

STATE OF CALIFORNIA - DEPARTMENT OF TRANSPORTATION
Caltrans

LAST REVISION 00-00-00
DATE PLOTTED => 5/22/2008
TIME PLOTTED => 11:17:00 AM

FOR REDUCED PLANS ORIGINAL SCALE IS IN MILLIMETERS 0 20 40 60 80

DGN FILE = T:\13103\MS\pse\SAS Struc\CCO\SAS CCO44\04-0120F1_0395R01.dgn
USERNAME = tlorico

CU 04251 EA 0120F1

DIST	COUNTY	ROUTE	KILOMETER POST TOTAL PROJECT	SHEET NO	TOTAL SHEETS
04	SF	80	13.2/13.9	396 R2	1204

Jens Erlingsson 12/19/02
REGISTERED ELECTRICAL ENGINEER DATE

12-6-04
PLANS APPROVAL DATE

REGISTERED PROFESSIONAL ENGINEER — JENS ERLINGSSON No. 8249 Exp. 9/30/06 ELECTRICAL — STATE OF CALIFORNIA

PB POWER, Inc.
A Parsons Brinckerhoff Company
303 Second St., Suite 700N
San Francisco, CA 94107-1317

The State of California or its officers or agents shall not be responsible for the accuracy or completeness of electronic copies of this plan sheet.

Caltrans now has a web site! To get to the web site, go to http://www.dot.ca.gov

REQUEST FOR INFORMATION NOT ADDRESSED IN THIS ECO REMAIN IN FORCE

MARK	DATE	DESCRIPTIONS	BY	CH'D	ECO#
		REVISIONS			
2	03/04/08	BARRIER MODIFICATIONS	JS BM	RG SE	44
1	02/19/08	ELECTRICAL MODIFICATIONS	MP EL	RR	42

CONTRACT CHANGE ORDER NO._____
SHEET_____ OF _____

FOR REVISION ONLY

REGISTERED PROFESSIONAL ENGINEER — S. A. ESTOQUE, JR. No. E-10151 Exp. 12/31/2006 ELECTRICAL — STATE OF CALIFORNIA

Caltrans Metric

CONDUIT DATA

Conduit No	Reference	Size	Type	Total Fill (mm²)	Allowable Fill (mm²)	Included Cable No.	Conductor Type
5251	E-116	78	RGS-PVC coated conduit	0.00	1935.24	Pull rope	Soft-Fiber Polyester
5261	E-117	78	RGS conduit	648.58	1935.24	LP222-2,4	1-3/C + gnd #6, 600 V, EPR insulation
						Pull rope	Soft-Fiber Polyester
						LP222-6,8	1-3/C + gnd #6, 600 V, EPR insulation
5262	E-117	78	RGS conduit	0.00	1935.24	Pull rope	Soft-Fiber Polyester
5263	E-117	78	RGS conduit	1108.98	1935.24	UP207-7	1-2/C + gnd #8, 600 V, EPR insulation
						2098	1-3/C + gnd #2, 600 V, EPR insulation
						UP207-1	1-2/C + gnd #10, 600 V, EPR insulation
						Pull rope	Soft-Fiber Polyester
						UP207-8	1-2/C + gnd #8, 600 V, EPR insulation
5264	E-117	78	RGS conduit	0.00	1935.24	Pull rope	Soft-Fiber Polyester
5265	E-117	78	RGS conduit	527.18	1935.24	Pull rope	Soft-Fiber Polyester
						2106	1-3/C + gnd #2, 600 V, EPR insulation
5266	E-117	78	RGS conduit	0.00	1935.24	Pull rope	Soft-Fiber Polyester
5267	E-117	78	RGS conduit	1201.71	1935.24	Pull rope	Soft-Fiber Polyester
						1474-8	50 pair #18, shielded pairs, IS/OS shield 600 V, XLPE insul., PVC jacket
5269	E-117	78	RGS-PVC coated conduit	30.19	1935.24	2475-3C	12 Fiber, single mode fiberoptic cable
						Pull rope	Soft-Fiber Polyester
5270	E-117	78	RGS-PVC coated conduit	1201.71	1935.24	Pull rope	Soft-Fiber Polyester
						1473-7	50 pair #18, shielded pairs, IS/OS shield 600 V, XLPE insul., PVC jacket
5271	E-117	78	RGS-PVC coated conduit	1201.71	1935.24	Pull rope	Soft-Fiber Polyester
						1474-7	50 pair #18, shielded pairs, IS/OS shield 600 V, XLPE insul., PVC jacket
5272	E-117	78	RGS-PVC coated conduit	1201.71	1935.24	1473-8	50 pair #18, shielded pairs, IS/OS shield 600 V, XLPE insul., PVC jacket
						Pull rope	Soft-Fiber Polyester
5273	E-117	78	RGS-PVC coated conduit	0.00	1935.24	Pull rope	Soft-Fiber Polyester
5274	E-117	78	RGS-PVC coated conduit	150.44	1935.24	MVDSE03A	MVDS DLC
						Pull rope	Soft-Fiber Polyester
5275	E-118	78	RGS-PVC coated conduit	1201.71	1935.24	2474-10	50 pair #18, shielded pairs, IS/OS shield 600 V, XLPE insul., PVC jacket
						Pull rope	Soft-Fiber Polyester
5276	E-118	78	RGS-PVC coated conduit	0.00	1935.24	Pull rope	Soft-Fiber Polyester
5277	E-118	78	RGS-PVC coated conduit	1201.71	1935.24	1473-8	50 pair #18, shielded pairs, IS/OS shield 600 V, XLPE insul., PVC jacket
5281	E-118	78	RGS conduit	307.37	1935.24	2210-5	1-3/C #14, 600 V, EPR insulation
						Pull rope	Soft-Fiber Polyester
						2201-3	1-3/C #14, 600 V, EPR insulation
						2201-4	1-9/C #16, 600 V, EPR insulation
5282	E-118	78	RGS conduit	98.10	1935.24	S-3056-9	1-4/C #14, 600 V, EPR insulation
						Pull rope	Soft-Fiber Polyester
5283	E-118	78	RGS conduit	1630.68	1935.24	UP208-8	1-2/C + gnd #8, 600 V, EPR insulation
						Pull rope	Soft-Fiber Polyester
						LP223-2,4	1-3/C + gnd #6, 600 V, EPR insulation
						LP223-6,8	1-3/C + gnd #6, 600 V, EPR insulation
						UP208-7	1-2/C + gnd #8, 600 V, EPR insulation
						2099	1-3/C + gnd #2, 600 V, EPR insulation
5284	E-118	78	RGS conduit	682.38	1935.24	UP208-2	1-2/C + gnd #8, 600 V, EPR insulation
						Pull rope	Soft-Fiber Polyester
						UP208-4	1-2/C + gnd #8, 600 V, EPR insulation
						UP208-6	1-2/C + gnd #8, 600 V, EPR insulation
5285	E-118	78	RGS conduit	527.18	1935.24	2107	1-3/C + gnd #2, 600 V, EPR insulation
						Pull rope	Soft-Fiber Polyester

CONDUIT DATA

Conduit No	Reference	Size	Type	Total Fill (mm²)	Allowable Fill (mm²)	Included Cable No.	Conductor Type
5286	E-118	78	RGS conduit	1299.81 (2)	1935.24 (2)	2154	1 - 2 pair, shielded #18 with IS/OA, 300 V, PVC jacket
						1474-10	50 pair #18, shielded pairs, IS/OS shield 600 V, XLPE insul., PVC jacket
						Pull rope	Soft-Fiber Polyester
5287	E-118	78	RGS conduit	0.00	1935.24	Pull rope	Soft-Fiber Polyester
5289	E-118	78	RGS-PVC coated conduit	1201.71	1935.24	Pull rope	Soft-Fiber Polyester
						1473-10	50 pair #18, shielded pairs, IS/OS shield 600 V, XLPE insul., PVC jacket
5290	E-118	78	RGS-PVC coated conduit	1519.51	1935.24	1474-8A	1 - 6 pair, shielded #18 with overall shield, 300 V, PVC jacket
						1474-8B	1 - 6 pair, shielded #18 with overall shield, 300 V, PVC jacket
						1474-8	50 pair #18, shielded pairs, IS/OS shield 600 V, XLPE insul., PVC jacket
						Pull rope	Soft-Fiber Polyester
5299	E-182	41	RGS conduit	425.70	534.55	A-3032-2	3 + 1 gnd #6,#8, 600 V, RHH/RHW insulation
						A-3033-2	3 + 1 gnd #6,#8, 600 V, RHH/RHW insulation
5301	E-181	41	RGS conduit	0.00	534.55	Pull rope	Soft-Fiber Polyester
5302	E-181	41	RGS conduit	0.00	534.55	Pull rope	Soft-Fiber Polyester
5303	E-181	53	RGS conduit	648.58	879.42	A-3040-3	1-3/C + gnd #6, 600 V, EPR insulation
						Pull rope	Soft-Fiber Polyester
						A-3039-3	1-3/C + gnd #6, 600 V, EPR insulation
5304	E-181	53	RGS conduit	0.00	879.42	Pull rope	Soft-Fiber Polyester
5305	E-181	41	RGS conduit	212.85	534.55	Pull rope	Soft-Fiber Polyester
						LP219-2,4A	3 + 1 gnd #6,#8, 600 V, RHH/RHW insulation
5306	E-181	41	RGS conduit	440.31	534.55	UP205-6	1-2/C + gnd #8, 600 V, EPR insulation
						Pull rope	Soft-Fiber Polyester
						LP219-6,8A	3 + 1 gnd #6,#8, 600 V, RHH/RHW insulation
5307	E-181	53	RGS conduit	324.29	879.42	LP219-2,4	1-3/C + gnd #6, 600 V, EPR insulation
						Pull rope	Soft-Fiber Polyester
5308	E-181	53	RGS conduit	551.75	879.42	UP205-6	1-2/C + gnd #8, 600 V, EPR insulation
						Pull rope	Soft-Fiber Polyester
						LP219-6,8	1-3/C + gnd #6, 600 V, EPR insulation
5309	E-181	53	RGS conduit	98.10	879.42	Pull rope	Soft-Fiber Polyester
						2155	1 - 2 pair, shielded #18 with IS/OA, 300 V, PVC jacket
5310	E-181	53	RGS conduit	0.00	879.42	Pull rope	Soft-Fiber Polyester
5311	E-181	41	RGS conduit	126.88	534.55	S-2031-2	3 + 1 gnd #6,#8, 600 V, RHH/RHW insulation
						Pull rope	Soft-Fiber Polyester
						UP204-1	1-2/C + gnd #10, 600 V, EPR insulation

For continuation, see next sheet.

CONDUIT AND TRAY SCHEDULE

E-441

CALCULATED/ DESIGNED BY	CHECKED BY	DATE REVISED	REVISED BY
PBP	AB	8/02	DATE 8/02

DESIGN OVERSIGHT
BEHZAD GOLEMOHAMMADI

STATE OF CALIFORNIA - DEPARTMENT OF TRANSPORTATION
Caltrans

LAST REVISION 00-00-00
DATE PLOTTED => 5/22/2008
TIME PLOTTED => 11:17:21 AM

FOR REDUCED PLANS ORIGINAL SCALE IS IN MILLIMETERS 0 20 40 60 80

DGN FILE => T:\T3103\MS\pse\SAS Struc\CCO\SAS CC044\04-0120F1_0306R02.dgn
USERNAME => tlorico

CU 04251 | EA 0120F1

DIST	COUNTY	ROUTE	KILOMETER POST TOTAL PROJECT	SHEET NO	TOTAL SHEETS
04	SF	80	13.2/13.9	397 R2	1204

Jens Erlingsson 12/19/02
REGISTERED ELECTRICAL ENGINEER DATE

12-6-04
PLANS APPROVAL DATE

REGISTERED PROFESSIONAL ENGINEER — JENS ERLINGSSON No. 8249 Exp. 9/30/06 ELECTRICAL — STATE OF CALIFORNIA

PB POWER, Inc.
A Parsons Brinckerhoff Company
303 Second St., Suite 700N
San Francisco, CA 94107-1317

The State of California or its officers or agents shall not be responsible for the accuracy or completeness of electronic copies of this plan sheet.

Caltrans now has a web site! To get to the web site, go to http://www.dot.ca.gov

REQUEST FOR INFORMATION NOT ADDRESSED IN THIS CCO REMAIN IN FORCE

MARK	DATE	REVISIONS DESCRIPTIONS	BY	CH'D	CCO#
2	03/04/08	BARRIER MODIFICATIONS	JS BM	RG SE	44
1	02/19/08	ELECTRICAL MODIFICATIONS	MP EL	RR	42

CONTRACT CHANGE ORDER NO._____
SHEET_____ OF_____

FOR REVISION ONLY

REGISTERED PROFESSIONAL ENGINEER — S. A. ESTOQUE, JR. No. E-10151 Exp. 12/31/2008 ELECTRICAL — STATE OF CALIFORNIA

CONDUIT DATA

Conduit No	Reference	Size	Type	Total Fill (mm²)	Allowable Fill (mm²)	Included Cable No.	Conductor Type
5312	E-181	41	RGS conduit	0.00	534.55	A-2035-2	3 + 1 gnd #6,#8, 600 V, RHH/RHW insulation
						Pull rope	Soft-Fiber Polyester
5313	E-181	78	RGS conduit	654.06	1935.24	S-2031-3	1-3/C + gnd #4, 600 V, EPR insulation
						UP204-1	1-2/C + gnd #10, 600 V, EPR insulation
						S-2031-1	1-3/C + gnd #2, 600 V, EPR insulation
						Pull rope	Soft-Fiber Polyester
5314	E-181	53	RGS conduit	648.58	879.42	A-2035-1	1-3/C + gnd #6, 600 V, EPR insulation
						A-2035-3	1-3/C + gnd #6, 600 V, EPR insulation
						Pull rope	Soft-Fiber Polyester
5315	E-181	53	RGS conduit	0.00	879.42	Pull rope	Soft-Fiber Polyester
5316	E-181	53	RGS conduit	0.00	879.42	Pull rope	Soft-Fiber Polyester
5317	E-181	78	RGS conduit	527.18	1935.24	A-2011-1	1-3/C + gnd #2, 600 V, EPR insulation
						Pull rope	Soft-Fiber Polyester
5320	E-185	78	RGS conduit	0.00	1935.24	Pull rope	Soft-Fiber Polyester
5321	E-181	41	RGS conduit	0.00	534.55	Pull rope	Soft-Fiber Polyester
5322	E-181	41	RGS conduit	0.00	534.55	Pull rope	Soft-Fiber Polyester
5323	E-181	53	RGS conduit	0.00	879.42	Pull rope	Soft-Fiber Polyester
5324	E-181	53	RGS conduit	0.00	879.42	Pull rope	Soft-Fiber Polyester
5325	E-181	53	RGS conduit	0.00	879.42	Pull rope	Soft-Fiber Polyester
5326	E-181	53	RGS conduit	0.00	879.42	Pull rope	Soft-Fiber Polyester
5333	E-182	41	RGS conduit	212.85	534.55	Pull rope	Soft-Fiber Polyester
						LP220-2,4A	3 + 1 gnd #6,#8, 600 V, RHH/RHW insulation
5334	E-182	41	RGS conduit	0.00	534.55	Pull rope	Soft-Fiber Polyester
5335	E-182	53	RGS conduit	324.29	879.42	Pull rope	Soft-Fiber Polyester
						LP220-2,4	1-3/C + gnd #6, 600 V, EPR insulation
5336	E-182	53	RGS conduit	0.00	879.42	Pull rope	Soft-Fiber Polyester
5337	E-182	53	RGS conduit	0.00	879.42	Pull rope	Soft-Fiber Polyester
5338	E-182	53	RGS conduit	0.00	879.42	Pull rope	Soft-Fiber Polyester
5346	E-185	53	RGS conduit	366.10	879.42	Pull rope	Soft-Fiber Polyester
						A-3031-1	1-3/C + gnd #4, 600 V, EPR insulation
5347	E-185	53	RGS conduit	0.00	879.42	Pull rope	Soft-Fiber Polyester
5348	E-181	41	RGS conduit	212.85	534.55	Pull rope	Soft-Fiber Polyester
						A-3031-2	3 + 1 gnd #6,#8, 600 V, RHH/RHW insulation
5349	E-181	41	RGS conduit	212.85	534.55	Pull rope	Soft-Fiber Polyester
						A-2011-2	3 + 1 gnd #6,#8, 600 V, RHH/RHW insulation
5350	E-185	53	RGS conduit	0.00	879.42	Pull rope	Soft-Fiber Polyester
5351	E-182	41	RGS conduit	0.00	534.55	Pull rope	Soft-Fiber Polyester
5352	E-182	41	RGS conduit	212.85	534.55	Pull rope	Soft-Fiber Polyester
						LP220-6,8A	3 + 1 gnd #6,#8, 600 V, RHH/RHW insulation
5353	E-182	53	RGS conduit	0.00	879.42	Pull rope	Soft-Fiber Polyester
5354	E-182	53	RGS conduit	324.29	879.42	Pull rope	Soft-Fiber Polyester
						LP220-6,8	1-3/C + gnd #6, 600 V, EPR insulation
5355	E-182	53	RGS conduit	0.00	879.42	Pull rope	Soft-Fiber Polyester
5356	E-182	53	RGS conduit	0.00	879.42	Pull rope	Soft-Fiber Polyester
5357	E-182	41	RGS conduit	212.85	534.55	A-3039-2	3 + 1 gnd #6,#8, 600 V, RHH/RHW insulation
						Pull rope	Soft-Fiber Polyester
5358	E-182	41	RGS conduit	0.00	534.55	Pull rope	Soft-Fiber Polyester
5359	E-182	53	RGS conduit	851.47	879.42	A-3039-3	1-3/C + gnd #6, 600 V, EPR insulation
						A-3039-1	1-3/C + gnd #2, 600 V, EPR insulation
						Pull rope	Soft-Fiber Polyester
5360	E-182	53	RGS conduit	648.58	879.42	Pull rope	Soft-Fiber Polyester

CONDUIT DATA

Conduit No	Reference	Size	Type	Total Fill (mm²)	Allowable Fill (mm²)	Included Cable No.	Conductor Type
						A-3039-3	1-3/C + gnd #6, 600 V, EPR insulation
						A-3040-3	1-3/C + gnd #6, 600 V, EPR insulation
5363	E-182	41	RGS conduit	212.85	534.55	A-2012-2	3 + 1 gnd #6, #8, 600 V, RHH/RHW insulation
						Pull rope	Soft-Fiber Polyester
5364	E-182	41	RGS conduit	0.00 (2)	534.55	Pull rope	Soft-Fiber Polyester (2)
5365	E-182	53	RGS conduit	0.00 (2)	879.42	Pull rope	Soft-Fiber Polyester (2)
5366	E-182	53	RGS conduit	527.18	879.42	A-2012-1	1-3/C + gnd #2, 600 V, EPR insulation
						Pull rope	Soft-Fiber Polyester
5367	E-182	53	RGS conduit	0.00 (2)	879.42	Pull rope	Soft-Fiber Polyester (2)
5368	E-182	53	RGS conduit	0.00 (2)	879.42	Pull rope	Soft-Fiber Polyester
5369	E-182	53	RGS conduit	0.00	879.42	Pull rope	Soft-Fiber Polyester (2)
5370	E-182	53	RGS conduit	0.00	879.42	Pull rope	Soft-Fiber Polyester
5371	E-182	53	RGS conduit	0.00 (2)	879.42	Pull rope	Soft-Fiber Polyester (2)
5372	E-182	53	RGS conduit	0.00	879.42	Pull rope	Soft-Fiber Polyester
5373	E-182	53	RGS conduit	0.00 (2)	879.42	Pull rope	Soft-Fiber Polyester (2)
5374	E-182	53	RGS conduit	0.00	879.42	Pull rope	Soft-Fiber Polyester
5375	E-182	53	RGS conduit	0.00	879.42	Pull rope	Soft-Fiber Polyester
5378	E-185	78	RGS conduit	0.00	1935.24	Pull rope	Soft-Fiber Polyester
5379	E-185	78	RGS conduit	0.00	1935.24	Pull rope	Soft-Fiber Polyester
5380	E-182	53	RGS conduit	0.00	879.42	Pull rope	Soft-Fiber Polyester
5381	E-182	41	RGS conduit	0.00	534.55	Pull rope	Soft-Fiber Polyester
5382	E-182	41	RGS conduit	0.00	534.55	Pull rope	Soft-Fiber Polyester
5383	E-182	78	RGS conduit	0.00	1935.24	Pull rope	Soft-Fiber Polyester
5384	E-182	53	RGS conduit	0.00	879.42	Pull rope	Soft-Fiber Polyester
5385	E-182	53	RGS conduit	0.00	879.42	Pull rope	Soft-Fiber Polyester
5386	E-182	53	RGS conduit	0.00	879.42	Pull rope	Soft-Fiber Polyester
5387	E-182	41	RGS conduit	212.85	534.55	A-3040-2	3 + 1 gnd #6,#8, 600 V, RHH/RHW insulation
						Pull rope	Soft-Fiber Polyester

For continuation, see next sheet.

CONDUIT AND TRAY SCHEDULE

E-442

DESIGNED BY	CALCULATED/ DESIGNED BY	CHECKED BY	DRAWN BY	DATE	REVISED BY	DATE REVISED
BEHZAD GOLEMOHAMMADI	PBP	AB		8/02		8/02

STATE OF CALIFORNIA - DEPARTMENT OF TRANSPORTATION
Caltrans

DESIGN OVERSIGHT

LAST REVISION 00-00-00
DATE PLOTTED => 5/22/2008
TIME PLOTTED => 11:17:42 AM

FOR REDUCED PLANS ORIGINAL SCALE IS IN MILLIMETERS 0 20 40 60 80

DGN FILE = T:\13103\MS\pse\SAS Struc\CCO\SAS CC044\04-0120F1_0397R02.dgn
USERNAME = florico

CU 04251 EA 0120F1

DIST	COUNTY	ROUTE	KILOMETER POST TOTAL PROJECT	SHEET NO	TOTAL SHEETS
04	SF	80	13.2/13.9	398 R1	1204

REGISTERED ELECTRICAL ENGINEER — 12/19/02 DATE

12-6-04
PLANS APPROVAL DATE

JENS ERLINGSSON No. 8249 Exp. 9/30/06 ELECTRICAL — REGISTERED PROFESSIONAL ENGINEER — STATE OF CALIFORNIA

PB POWER, Inc.
A Parsons Brinckerhoff Company
303 Second St., Suite 700N
San Francisco, CA 94107-1317

The State of California or its officers or agents shall not be responsible for the accuracy or completeness of electronic copies of this plan sheet.

Caltrans now has a web site! To get to the web site, go to http://www.dot.ca.gov

REQUEST FOR INFORMATION NOT ADDRESSED IN THIS CCO REMAIN IN FORCE

MARK	DATE	DESCRIPTIONS	BY	CH'D	CCO#
		REVISIONS			
1	03/04/08	BARRIER MODIFICATIONS	TW	RG	44

CONTRACT CHANGE ORDER NO._____
SHEET _____ OF _____

FOR REVISION ONLY

S. A. ESTOQUE JR — REGISTERED PROFESSIONAL ENGINEER — No. E-10151 Exp. 12/31/2008 ELECTRICAL — STATE OF CALIFORNIA

CONDUIT DATA

Conduit No	Reference	Size	Type	Total Fill (mm^2)	Allowable Fill (mm^2)	Included Cable No.	Conductor Type
5388	E-182	41	RGS conduit	0.00	534.55	Pull rope	Soft-Fiber Polyester
5389	E-182	53	RGS conduit	851.47	879.42	A-3040-3	1-3/C + gnd #6, 600 V, EPR insulation
						Pull rope	Soft-Fiber Polyester
						A-3040-1	1-3/C + gnd #2, 600 V, EPR insulation
5390	E-182	53	RGS conduit	0.00	879.42	Pull rope	Soft-Fiber Polyester
5391	E-182	53	RGS conduit	0.00	879.42	Pull rope	Soft-Fiber Polyester
5392	E-182	53	RGS conduit	0.00	879.42	Pull rope	Soft-Fiber Polyester
5393	E-183	41	RGS conduit	440.31	534.55	A-3034-2	3 + 1 gnd #6,#8, 600 V, RHH/RHW insulation
						Pull rope	Soft-Fiber Polyester
						UP106-1	1-2/C + gnd #8, 600 V, EPR insulation
5394	E-183	41	RGS conduit	425.70	534.55	Pull rope	Soft-Fiber Polyester
						LP221-2,4A	3 + 1 gnd #6,#8, 600 V, RHH/RHW insulation
						LP221-6,8A	3 + 1 gnd #6,#8, 600 V, RHH/RHW insulation
5395	E-183	78	RGS conduit	527.18	1935.24	Pull rope	Soft-Fiber Polyester
						A-3034-1	1-3/C + gnd #2, 600 V, EPR insulation
5396	E-183	53	RGS conduit	648.58	879.42	Pull rope	Soft-Fiber Polyester
						LP221-2,4	1-3/C + gnd #6 ,600 V, EPR insulation
						LP221-6,8	1-3/C + gnd #6 ,600 V, EPR insulation
5397	E-183	53	RGS conduit	0.00	879.42	Pull rope	Soft-Fiber Polyester
5398	E-183	53	RGS conduit	0.00	879.42	Pull rope	Soft-Fiber Polyester
5399	E-183	41	RGS conduit	0.00	534.55	Pull rope	Soft-Fiber Polyester
5400	E-183	41	RGS conduit	0.00	534.55	Pull rope	Soft-Fiber Polyester
5401	E-183	53	RGS conduit	0.00	879.42	Pull rope	Soft-Fiber Polyester
5402	E-183	53	RGS conduit	0.00	879.42	Pull rope	Soft-Fiber Polyester
5403	E-183	53	RGS conduit	0.00	879.42	Pull rope	Soft-Fiber Polyester
5404	E-183	53	RGS conduit	0.00	879.42	Pull rope	Soft-Fiber Polyester
5405	E-183	53	RGS conduit	0.00	879.42	Pull rope	Soft-Fiber Polyester
5406	E-183	53	RGS conduit	0.00	879.42	Pull rope	Soft-Fiber Polyester
5411	E-183	41	RGS conduit	0.00	534.55	Pull rope	Soft-Fiber Polyester
5412	E-183	41	RGS conduit	0.00	534.55	Pull rope	Soft-Fiber Polyester
5413	E-183	53	RGS conduit	0.00	879.42	Pull rope	Soft-Fiber Polyester
5414	E-183	53	RGS conduit	0.00	879.42	Pull rope	Soft-Fiber Polyester
5415	E-183	53	RGS conduit	0.00	879.42	Pull rope	Soft-Fiber Polyester
5416	E-183	53	RGS conduit	0.00	879.42	Pull rope	Soft-Fiber Polyester
5417	E-183	41	RGS conduit	0.00	534.55	Pull rope	Soft-Fiber Polyester
5418	E-183	41	RGS conduit	0.00	534.55	Pull rope	Soft-Fiber Polyester
5419	E-183	53	RGS conduit	0.00	879.42	Pull rope	Soft-Fiber Polyester
5420	E-183	53	RGS conduit	0.00	879.42	Pull rope	Soft-Fiber Polyester
5421	E-183	53	RGS conduit	0.00	879.42	Pull rope	Soft-Fiber Polyester
5422	E-183	53	RGS conduit	0.00	879.42	Pull rope	Soft-Fiber Polyester
5423	E-183	41	RGS conduit	212.85	534.55	Pull rope	Soft-Fiber Polyester
						A-3035-2	3 + 1 gnd #6,#8, 600 V, RHH/RHW insulation
5424	E-183	41	RGS conduit	0.00	534.55	Pull rope	Soft-Fiber Polyester
5425	E-183	78	RGS conduit	366.10	1935.24	A-3035-1	1-3/C + gnd #4 600 V, EPR insulation
						Pull rope	Soft-Fiber Polyester

CONDUIT DATA

Conduit No	Reference	Size	Type	Total Fill (mm^2)	Allowable Fill (mm^2)	Included Cable No.	Conductor Type
5426	E-183	53	RGS conduit	0.00	879.42	Pull rope	Soft-Fiber Polyester
5427	E-183	53	RGS conduit	0.00	879.42	Pull rope	Soft-Fiber Polyester
5428	E-183	53	RGS conduit	0.00	879.42	Pull rope	Soft-Fiber Polyester
5429	E-183	41	RGS conduit	0.00	534.55	Pull rope	Soft-Fiber Polyester
5430	E-183	41	RGS conduit	0.00	534.55	Pull rope	Soft-Fiber Polyester
5431	E-183	53	RGS conduit	0.00	879.42	Pull rope	Soft-Fiber Polyester
5432	E-183	53	RGS conduit	0.00	879.42	Pull rope	Soft-Fiber Polyester
5433	E-183	53	RGS conduit	0.00	879.42	Pull rope	Soft-Fiber Polyester
5434	E-183	53	RGS conduit	0.00	879.42	Pull rope	Soft-Fiber Polyester
5436	E-183	53	RGS conduit	0.00	879.42	Pull rope	Soft-Fiber Polyester
5437	E-185	53	RGS conduit	0.00	879.42	Pull rope	Soft-Fiber Polyester
5441	E-183	41	RGS conduit	0.00	534.55	Pull rope	Soft-Fiber Polyester
5442	E-183	41	RGS conduit	0.00	534.55	Pull rope	Soft-Fiber Polyester
5443	E-183	53	RGS conduit	0.00	879.42	Pull rope	Soft-Fiber Polyester
5444	E-183	53	RGS conduit	0.00	879.42	Pull rope	Soft-Fiber Polyester
5445	E-184	53	RGS conduit	0.00	879.42	Pull rope	Soft-Fiber Polyester
5446	E-184	53	RGS conduit	0.00	879.42	Pull rope	Soft-Fiber Polyester
5447	E-183	41	RGS conduit	0.00	534.55	Pull rope	Soft-Fiber Polyester
5448	E-183	41	RGS conduit	0.00	534.55	Pull rope	Soft-Fiber Polyester
5449	E-183	53	RGS conduit	0.00	879.42	Pull rope	Soft-Fiber Polyester
5450	E-183	53	RGS conduit	0.00	879.42	Pull rope	Soft-Fiber Polyester
5451	E-184	53	RGS conduit	527.18	879.42	A-2013-1	1-3/C + gnd #2, 600 V, EPR insulation
						Pull rope	Soft-Fiber Polyester
5452	E-184	53	RGS conduit	212.85	879.42	Pull rope	Soft-Fiber Polyester
						A-2013-2	3 + 1 gnd #6,#8, 600 V, RHH/RHW insulation
5453	E-184	53	RGS conduit	454.92 (1)	879.42	Pull rope	Soft-Fiber Polyester
						UP208-4	1-2/C + gnd #8, 600 V, EPR insulation (1)
				(1)		UP208-6	1-2/C + gnd #8, 600 V, EPR insulation
5454	E-184	53	RGS conduit	212.85	879.42	A-3036-2	3 + 1 gnd #6,#8, 600 V, RHH/RHW insulation
						Pull rope (1)	Soft-Fiber Polyester
5455	E-184	53	RGS conduit	454.92 (1)	879.42	UP208-4	1-2/C + gnd #8, 600 V, EPR insulation
						Pull rope	Soft-Fiber Polyester (1)
				(1)		UP208-6	1-2/C + gnd #8, 600 V, EPR insulation

For continuation, see next sheet.

CONDUIT AND TRAY SCHEDULE

E-443

DESIGN OVERSIGHT — BEHZAD GOLEMOHAMMADI

STATE OF CALIFORNIA - DEPARTMENT OF TRANSPORTATION — Caltrans

CALCULATED/ DESIGNED BY	CHECKED BY	DATE REVISED	REVISED BY
PBP	AB	8/02	DATE

LAST REVISION 00-00-00 — DATE PLOTTED => 5/22/2008 — TIME PLOTTED => 11:18:02 AM

FOR REDUCED PLANS ORIGINAL SCALE IS IN MILLIMETERS — 0 20 40 60 80

DGN FILE => T:\13103\MS\pse\SAS Struc\CCO\SAS CCO44\04-0120f1_0308R01.dgn
USERNAME => tlorico

CU 04251 — EA 0120F1

CONDUIT DATA

Conduit No	Reference	Size	Type	Total Fill (mm^2)	Allowable Fill (mm^2)	Included Cable No.	Conductor Type
5456	E-184	53	RGS conduit	366.10	879.42	A-3036-1	1-3/C + gnd #4 , 600 V, EPR insulation
						Pull rope	Soft-Fiber Polyester
5457	E-184	53	RGS conduit	196.2 (2)	879.42	2149	1 - 2 pair, shielded #18 with IS/OA, 300 V, PVC jacket
						Pull rope	Soft-Fiber Polyester
					(2)	2150	1 - 2 pair, shielded #18 with IS/OA, 300 V, PVC jacket
5458	E-184	53	RGS conduit	0.00	879.42	Pull rope	Soft-Fiber Polyester
5459	E-184	41	RGS conduit	0.00	534.55	Pull rope	Soft-Fiber Polyester
5460	E-184	41	RGS conduit	227.46	534.55	Pull rope	Soft-Fiber Polyester
						UP208-2 (2)	1-2/C + gnd #8, 600 V, EPR insulation
5461	E-184	53	RGS conduit	0.00	879.42	Pull rope	Soft-Fiber Polyester
5462	E-184	53	RGS conduit	227.46	879.42	Pull rope	Soft-Fiber Polyester
						UP208-2 (2)	1-2/C + gnd #8, 600 V, EPR insulation
5463	E-184	53	RGS conduit	98.10	879.42	2148	1 - 2 pair, shielded #18 with IS/OA, 300 V, PVC jacket
						Pull rope	Soft-Fiber Polyester
5464	E-184	53	RGS conduit	0.00	879.42	Pull rope	Soft-Fiber Polyester
5465	E-184	53	RGS conduit	0.00	879.42	Pull rope	Soft-Fiber Polyester
5466	E-184	53	RGS conduit	0.00	879.42	Pull rope	Soft-Fiber Polyester
5471	E-184	41	RGS conduit	212.85	534.55	Pull rope	Soft-Fiber Polyester
						LP222-2,4A	3 + 1 gnd #6, #8, 600 V, RHH/RHW insulation
5472	E-184	41	RGS conduit	212.85	534.55	Pull rope	Soft-Fiber Polyester
						LP222-6,8A	3 + 1 gnd #6, #8, 600 V, RHH/RHW insulation
5473	E-184	53	RGS conduit	324.29	879.42	Pull rope	Soft-Fiber Polyester
						LP222-2,4	1-3/C + gnd #6, 600 V, EPR insulation
5474	E-184	53	RGS conduit	324.29	879.42	Pull rope	Soft-Fiber Polyester
						LP222-6,8	1-3/C + gnd #6, 600 V, EPR insulation
5475	E-184	53	RGS conduit	0.00	879.42	Pull rope	Soft-Fiber Polyester
5476	E-184	53	RGS conduit	0.00	879.42	Pull rope	Soft-Fiber Polyester
5477	E-184	41	RGS conduit	0.00	534.55	Pull rope	Soft-Fiber Polyester
5478	E-184	41	RGS conduit	0.00	534.55	Pull rope	Soft-Fiber Polyester
5479	E-184	53	RGS conduit	0.00	879.42	Pull rope	Soft-Fiber Polyester
5480	E-184	53	RGS conduit	0.00	879.42	Pull rope	Soft-Fiber Polyester
5481	E-184	53	RGS conduit	0.00	879.42	Pull rope	Soft-Fiber Polyester
5482	E-184	53	RGS conduit	0.00	879.42	Pull rope	Soft-Fiber Polyester
5483	E-184	41	RGS conduit	0.00	534.55	Pull rope	Soft-Fiber Polyester
5484	E-184	41	RGS conduit	0.00	534.55	Pull rope	Soft-Fiber Polyester
5485	E-184	53	RGS conduit	0.00	879.42	Pull rope	Soft-Fiber Polyester
5486	E-184	53	RGS conduit	0.00	879.42	Pull rope	Soft-Fiber Polyester
5487	E-184	53	RGS conduit	0.00	879.42	Pull rope	Soft-Fiber Polyester
5488	E-184	53	RGS conduit	0.00	879.42	Pull rope	Soft-Fiber Polyester
5489	E-184	41	RGS conduit	268.36	534.55	S-2031-4	3 + 1 gnd #4,#8, 600 V, RHH/RHW insulation
						Pull rope	Soft-Fiber Polyester
5490	E-184	41	RGS conduit	212.85	534.55	Pull rope	Soft-Fiber Polyester
						A-2035-4	3 + 1 gnd #6,#8, 600 V, RHH/RHW insulation
5491	E-184	53	RGS conduit	0.00	879.42	S-2031-3	1-3/C + gnd #4, 600 V, EPR insulation
						Pull rope	Soft-Fiber Polyester
5492	E-184	53	RGS conduit	0.00	879.42	A-2035-3	1-3/C + gnd #6, 600 V, EPR insulation
						Pull rope	Soft-Fiber Polyester

DATE	REVISED BY	DATE REVISED
8/02	AB	8/02

CALCULATED/DESIGNED BY
CHECKED BY

DESIGN OVERSIGHT
BEHZAD GOLEMOHAMMADI

STATE OF CALIFORNIA - DEPARTMENT OF TRANSPORTATION
Caltrans

MARK	DATE	REVISIONS	BY	CH'D	CCO#
2	03/04/08	BARRIER MODIFICATIONS	JS BM	RG SE	44
1	02/19/08	ELECTRICAL MODIFICATIONS	MP EL	RR	42

REQUEST FOR INFORMATION NOT ADDRESSED IN THIS CCO REMAIN IN FORCE

CONTRACT CHANGE ORDER NO._____
SHEET_____ OF _____

FOR REVISION ONLY

DIST	COUNTY	ROUTE	KILOMETER POST TOTAL PROJECT	SHEET NO	TOTAL SHEETS
04	SF	80	13.2/13.9	399 R2	1204

REGISTERED ELECTRICAL ENGINEER — 12/19/02 DATE

12-6-04
PLANS APPROVAL DATE

JENS ERLINGSSON No. 8249 Exp. 9/30/06 ELECTRICAL — REGISTERED PROFESSIONAL ENGINEER — STATE OF CALIFORNIA

S. A. ESTOQUE, JR. No. E-10151 Exp. 12/31/2008 ELECTRICAL — REGISTERED PROFESSIONAL ENGINEER — STATE OF CALIFORNIA

PB POWER, Inc.
A Parsons Brinckerhoff Company
303 Second St., Suite 700N
San Francisco, CA 94107-1317

The State of California or its officers or agents shall not be responsible for the accuracy or completeness of electronic copies of this plan sheet.

Caltrans now has a web site! To get to the web site, go to http://www.dot.ca.gov

CONDUIT DATA

Conduit No	Reference	Size	Type	Total Fill (mm^2)	Allowable Fill (mm^2)	Included Cable No.	Conductor Type
5493	E-184	53	RGS conduit	0.00	879.42	Pull rope	Soft-Fiber Polyester
5494	E-184	53	RGS conduit	0.00	879.42	Pull rope	Soft-Fiber Polyester
5495	E-184	41	RGS conduit	0.00	534.55	Pull rope	Soft-Fiber Polyester
5497	E-184	53	RGS conduit	0.00	879.42	Pull rope	Soft-Fiber Polyester
5498	E-183	53	RGS conduit	0.00	879.42	Pull rope	Soft-Fiber Polyester
5501	E-185	41	RGS conduit	0.00	534.55	Pull rope	Soft-Fiber Polyester
5502	E-185	41	RGS conduit	0.00	534.55	Pull rope	Soft-Fiber Polyester
5503	E-185	53	RGS conduit	0.00	879.42	Pull rope	Soft-Fiber Polyester
5504	E-185	53	RGS conduit	0.00	879.42	Pull rope	Soft-Fiber Polyester
5505	E-185	53	RGS conduit	0.00	879.42	Pull rope	Soft-Fiber Polyester
5506	E-185	53	RGS conduit	0.00	879.42	Pull rope	Soft-Fiber Polyester
5512	E-185	41	RGS conduit	212.85	534.55	Pull rope	Soft-Fiber Polyester
						A-2014-2	3 + 1 gnd #6,#8, 600 V, RHH/RHW insulation
5513	E-185	53	RGS conduit	0.00	879.42	Pull rope	Soft-Fiber Polyester
5514	E-185	53	RGS conduit	0.00	879.42	Pull rope	Soft-Fiber Polyester
5515	E-185	53	RGS conduit	0.00	879.42	Pull rope	Soft-Fiber Polyester
5516	E-185	53	RGS conduit	0.00	879.42	Pull rope	Soft-Fiber Polyester
5517	E-185	53	RGS conduit	0.00	879.42	Pull rope	Soft-Fiber Polyester
5518	E-185	53	RGS conduit	0.00	879.42	Pull rope	Soft-Fiber Polyester
5519	E-185	41	RGS conduit	212.85	534.55	S-2032-2	3 + 1 gnd #6,#8, 600 V, RHH/RHW insulation
						Pull rope	Soft-Fiber Polyester
5520	E-185	41	RGS conduit	0.00	534.55	Pull rope	Soft-Fiber Polyester
5521	E-185	53	RGS conduit	366.10	879.42	Pull rope	Soft-Fiber Polyester
						S-2032-1	1-3/C + gnd #4, 600 V, EPR insulation
5522	E-185	53	RGS conduit	0.00	879.42	Pull rope	Soft-Fiber Polyester
5523	E-185	53	RGS conduit	0.00	879.42	Pull rope	Soft-Fiber Polyester
5524	E-185	53	RGS conduit	0.00	879.42	Pull rope	Soft-Fiber Polyester
5528	E-185	41	RGS conduit	0.00	534.55	Pull rope	Soft-Fiber Polyester

For continuation, see next sheet.

CONDUIT AND TRAY SCHEDULE

E-444

LAST REVISION 00-00-00
DATE PLOTTED => 5/22/2008
TIME PLOTTED => 11:18:21 AM

FOR REDUCED PLANS ORIGINAL SCALE IS IN MILLIMETERS 0 20 40 60 80

DGN FILE => T:\13103\MS\pse\SAS Struc\CCO\SAS CC044\04-0120F1_0399R02.dgn
USERNAME => llorico

CU 04251 EA 0120F1

CONDUIT DATA

Conduit No	Reference	Size	Type	Total Fill (mm²)	Allowable Fill (mm²)	Included Cable No.	Conductor Type
5529	E-185	53	RGS conduit	0.00	879.42	Pull rope	Soft-Fiber Polyester
5530	E-185	41	RGS conduit	0.00	534.55	Pull rope	Soft-Fiber Polyester
5531	E-185	41	RGS conduit	0.00	534.55	Pull rope	Soft-Fiber Polyester
5532	E-185	41	RGS conduit	0.00	534.55	Pull rope	Soft-Fiber Polyester
5533	E-185	53	RGS conduit	0.00	879.42	Pull rope	Soft-Fiber Polyester
5534	E-185	53	RGS conduit	0.00	879.42	Pull rope	Soft-Fiber Polyester
5535	E-185	53	RGS conduit	0.00	879.42	Pull rope	Soft-Fiber Polyester
5536	E-185	53	RGS conduit	0.00	879.42	Pull rope	Soft-Fiber Polyester
5537	E-185	53	RGS conduit	0.00	879.42	Pull rope	Soft-Fiber Polyester
5543	E-185	41	RGS conduit	212.85 (1)	534.55	Pull rope	Soft-Fiber Polyester
						LP223-2,4A	3 + 1 gnd #6, #8, 600 V, RHH/RHW insulation (1)
5544	E-185	41	RGS conduit	212.85	534.55	Pull rope	Soft-Fiber Polyester
						LP223-6,8A	3 + 1 gnd #6, #8, 600 V, RHH/RHW insulation
5545	E-185	53	RGS conduit	324.29 (1)	879.42	Pull rope	Soft-Fiber Polyester
						UP208-4A	1-2/C+gnd #8 ,600V, EPR insulation
						LP223-2,4	1-3/C +gnd #6, 600 V, EPR insulation (1)
5546	E-212	103	RGS conduit	2780.99	3324.51	2391	3-1/C #4/0 + 1/C #1/0 gnd, 15 kV, EPR insulation
						Pull rope	Soft-Fiber Polyester
5547	E-185	53	RGS conduit	0.00 (1)	879.42		(1)
						Pull rope	Soft-Fiber Polyester
5548	E-185	53	RGS conduit	0.00	879.42	Pull rope	Soft-Fiber Polyester
5549	E-185	41	RGS conduit	0.00	534.55	Pull rope	Soft-Fiber Polyester
5550	E-185	41	RGS conduit	0.00 (1)	534.55		(1)
						Pull rope	Soft-Fiber Polyester
5551	E-185	53	RGS conduit	0.00	879.42	Pull rope	Soft-Fiber Polyester
5552	E-185	53	RGS conduit	0.00 (1)	879.42		(1)
						UP208-2A	1-2/C + gnd #8, 600 V, EPR insulation
						Pull rope	Soft-Fiber Polyester
5553	E-185	53	RGS conduit	98.10 (1)	879.42	Pull rope	Soft-Fiber Polyester
						2148	1 - 2 pair, shielded #18 with IS/OA, 300 V, PVC jacket (1)
5554	E-185	53	RGS conduit	0.00	879.42	Pull rope	Soft-Fiber Polyester
5555	E-185	41	RGS conduit	527.18	534.55	A-2014-1	1-3/C + gnd #2, 600 V, EPR insulation
						Pull rope	Soft-Fiber Polyester
5556	E-185	53	RGS conduit	324.29	879.42	LP223-6,8	1-3/C + gnd #6, 600 V, EPR insulation
						Pull rope	Soft-Fiber Polyester
5557	E-186	53	RGS conduit	0.00	879.42	Pull rope	Soft-Fiber Polyester
5558	E-186	53	RGS conduit	0.00	879.42	Pull rope	Soft-Fiber Polyester
5597	E-185	53	RGS conduit	0.00	879.42	Pull rope	Soft-Fiber Polyester
7403	E-139	41	RGS conduit	0.00	534.55	Pull rope	Soft-Fiber Polyester
8001	E-293	41	RGS-PVC coated conduit	227.46	534.55	Pull rope	Soft-Fiber Polyester
						1201-6	1-2/C + gnd #8, 600 V, EPR insulation
8002	E-293	41	RGS-PVC coated conduit	454.92	534.55	1201-6	1-2/C +gnd #8, 600 V, EPR insulation
						1201-2	1-2/C + gnd #8, 600 V, EPR insulation
						Pull rope	Soft-Fiber Polyester

DATE	REVISED BY	DATE	REVISED BY
8/02	PBP	8/02	AB

CALCULATED/DESIGNED BY — CHECKED BY

DESIGN OVERSIGHT — BEHZAD GOLEMOHAMMADI

STATE OF CALIFORNIA - DEPARTMENT OF TRANSPORTATION — Caltrans

REQUEST FOR INFORMATION NOT ADDRESSED IN THIS CCO REMAIN IN FORCE					
MARK	DATE	REVISIONS	BY	CH'D	CCO#
1	03/04/08	BARRIER MODIFICATIONS	JS BM	RG SE	44

CONTRACT CHANGE ORDER NO._____
SHEET_____ OF _____

FOR REVISION ONLY

DIST	COUNTY	ROUTE	KILOMETER POST TOTAL PROJECT	SHEET NO	TOTAL SHEETS
04	SF	80	13.2/13.9	400 R1	1204

12/19/02
REGISTERED ELECTRICAL ENGINEER — DATE

12-6-04
PLANS APPROVAL DATE

JENS ERLINGSSON No. 8249 Exp. 9/30/06 ELECTRICAL — REGISTERED PROFESSIONAL ENGINEER — STATE OF CALIFORNIA

S. A. ESTOQUE, JR. No. E-10151 Exp. 12/31/2008 ELECTRICAL — REGISTERED PROFESSIONAL ENGINEER — STATE OF CALIFORNIA

PB POWER, Inc.
A Parsons Brinckerhoff Company
303 Second St., Suite 700N
San Francisco, CA 94107-1317

The State of California or its officers or agents shall not be responsible for the accuracy or completeness of electronic copies of this plan sheet.

Caltrans now has a web site! To get to the web site, go to http://www.dot.ca.gov

CONDUIT DATA

Conduit No	Reference	Size	Type	Total Fill (mm²)	Allowable Fill (mm²)	Included Cable No.	Conductor Type
8003	E-293	21	RGS-PVC coated conduit	126.88	187.69	Pull rope	Soft-Fiber Polyester
						2204-3	1-2/C + gnd #10, 600 V, EPR insulation
8004	E-293	41	RGS-PVC coated conduit	227.46	534.55	1201-1	1-2/C + gnd #8, 600 V, EPR insulation
						Pull rope	Soft-Fiber Polyester
8005	E-293	41	RGS-PVC coated conduit	151.82	534.55	2204-5	1-3/C #12, 600 V, EPR insulation
						Pull rope	Soft-Fiber Polyester
						UP210-3	2 + 1 gnd #12, #12, 600 V, RHH/RHW insulation
8006	E-293	53	RGS-PVC coated conduit	506.16	879.42	UP210-3	2 + 1 gnd #12, #12, 600 V, RHH/RHW insulation
						2204-3	1-2/C + gnd #10, 600 V, EPR insulation
						1201-1	1-2/C + gnd #8, 600n V, EPR insulation
						2204-5	1-3/C #12, 600 V, EPR insulation
						Pull rope	Soft-Fiber Polyester
8007	E-293	53	RGS-PVC coated conduit	506.16	879.42	UP210-3	2 + 1 gnd #12, #12, 600 V, RHH/RHW insulation
						Pull rope	Soft-Fiber Polyester
						1201-1	1-2/C + gnd #8, 600 V, EPR insulation
						2204-3	1-2/C + gnd #10, 600 V, EPR insulation
						2204-5	1-3/C #12, 600 V, EPR insulation
8008	E-293	53	RGS-PVC coated conduit	449.86	879.42	2204-3	1-2/C + gnd #10, 600 V, EPR insulation
						2204-2	1-3/C #16, 600 V, EPR insulation
						2204-1	1-3/C #16, 600 V, EPR insulation
						UP210-1	2 + 1 gnd #8, #10, 600 V RHH/RHW insulation
						Pull rope	Soft-Fiber Polyester
						2204-5	1-3/C #12, 600V , EPR insulation
8009	E-293	41	RGS-PVC coated conduit	454.92	534.55	1201-2	1-2/C + gnd #8, 600 V, EPR insulation
						Pull rope	Soft-Fiber Polyester
						1201-6	1-2/C + gnd #8, 600 V, EPR insulation
8010	E-293	41	RGS-PVC coated conduit	227.46	534.55	Pull rope	Soft-Fiber Polyester
						1201-2	1-2/C + gnd #8, 600 V, EPR insulation
8011	E-264A, E-293	41	RGS-PVC coated conduit	344.86	534.55	1201-1	1-2/C + gnd #8, 600 V, EPR insulation
						2204-1	1-3/C #16, 600 V, EPR insulation
						2204-2	1-3/C #16, 600 V, EPR insulation
8012	E-293	41	RGS-PVC coated conduit	145.44	534.55	Pull rope	Soft-Fiber Polyester
						UP210-3	2 + 1 gnd #12, #12, 600 V, RHH/RHW insulation
						UP210-1	2 + 1 gnd #8, #10, 600 V, RHH/RHW insulation
8013	E-294	21	RGS-PVC coated conduit	227.46	187.69	2201-6	1-2/C + gnd #8, 600 V, EPR insulation
						Pull rope	Soft-Fiber Polyester
8014	E-264A, E-293	41	RGS-PVC coated conduit	441.44	534.55	1201-6	1-2/C + gnd #8, 600 V, EPR insulation
						1201-2	1-2/C + gnd #8, 600 V, EPR insulation
8100	E-294	41	RGS-PVC coated conduit	227.46	534.55	Pull rope	Soft-Fiber Polyester
						2201-1	1-2/C + gnd #8, 600 V, EPR insulation

For continuation, see next sheet.

CONDUIT AND TRAY SCHEDULE

E-445

LAST REVISION 00-00-00 — DATE PLOTTED => 5/22/2008 — TIME PLOTTED => 11:16:48 AM

FOR REDUCED PLANS ORIGINAL SCALE IS IN MILLIMETERS 0 20 40 60 80

DGN FILE => T:\13103\MS\pse\SAS Struc\CCO\SAS CC044\04-0120f1_0400R01.dgn
USERNAME => florico

CU 04251 — EA 0120F1

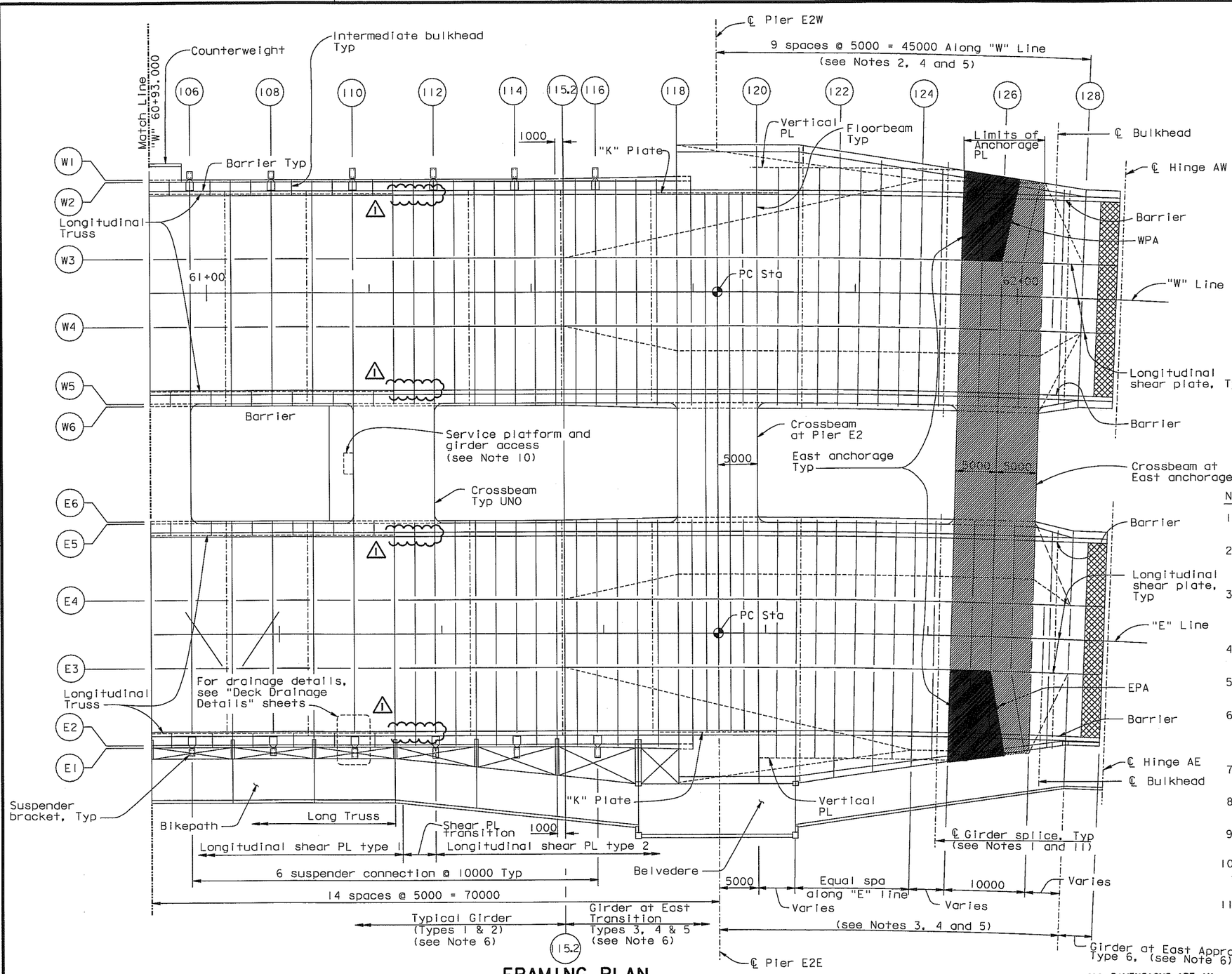

FRAMING PLAN

1:250

LEGEND:

- East anchorage
- Top anchorage plate
- Blockout for modular joint (see Note 7)

NOTES:

1. For girder splice details, see "Typical Girder Details" sheets.
2. "W" Line floorbeams from PP120.5 through PP124.5, and PP126, PP127.5 and PP128 are radial with respect to "W" Line curve.
3. "E" Line floorbeams from PP120.5 through PP124.5, and PP126, PP127.5 and 128 are aligned with "W" Line floorbeams and radial with respect to "E" Line curve.
4. "W" and "E" Line floorbeams from PP118 through PP120 are parallel.
5. "W" and "E" Line floorbeams from PP125 through PP127 are parallel.
6. For typical girder details, see "Typical Girder Details" sheets. For girder details and transition at East transition PP118 through PP128, see "Girder at East Transition" and "Girder At Pier E2" sheets.
7. For modular joint details, see "Hinge A Expansion Joint Details" sheets.
8. For Hinge A bulkheads, floorbeams, and joint blockout, see "Hinge A Details" sheets.
9. For "K" and vertical plates, see "Girder at East Transition Details" sheets.
10. For service platform details, see "Road Plans". For girder access details, see "Girder Access Details" sheets.
11. From PP115 through PP128, the distance between center line of girder splice and adjacent floorbeam is 800.

ALL DIMENSIONS ARE IN MILLIMETERS UNLESS OTHERWISE SHOWN

DIST.	COUNTY	ROUTE	KILOMETER POST TOTAL PROJECT	SHEET NO.	TOTAL SHEETS
04	SF	80	13.2/13.9	622R1	1204

George Baker
REGISTERED ENGINEER - CIVIL
12-6-04
PLANS APPROVAL DATE

The State of California or its officers or agents shall not be responsible for the accuracy or completeness of electronic copies of this plan sheet.

George S. Baker, No. C57112, Exp. 12/31/05, CIVIL, REGISTERED PROFESSIONAL ENGINEER, STATE OF CALIFORNIA

Daniel J. Turner, No. C 65033, Exp. 06/30/09, CIVIL, REGISTERED PROFESSIONAL ENGINEER, STATE OF CALIFORNIA

FOR REVISIONS ONLY

T.Y. LIN / MOFFATT & NICHOL
825 BATTERY STREET
SAN FRANCISCO, CA 94111

Caltrans now has a web site! To get to the web site, go to: http://www.dot.ca.gov

MARK	DATE	DESCRIPTIONS	BY	CH'D	CCO#
		REVISIONS			
1	08/24/07	BARRIER MODIFICATIONS	GB	DT	44

CONTRACT CHANGE ORDER NO. ____
SHEET ___ OF ___

DESIGN	BY G. Baker	CHECKED T. McMeans
DETAILS	BY M. Gulyas	CHECKED T. McMeans
QUANTITIES	BY G. Baker	CHECKED M. Roberts

R. Valizadeh/V. Toan/Y.L./W.L./F.C.
DESIGN OVERSIGHT
SIGN OFF DATE 08/24/07

Rev. Date: 5-18-98

PREPARED FOR THE STATE OF CALIFORNIA DEPARTMENT OF TRANSPORTATION

R. Manzanarez
PROJECT ENGINEER

CU 04
EA 0120F1

BRIDGE NO. 34-0006L/R
KILOMETER POST 13.2/13.9

SAN FRANCISCO OAKLAND BAY BRIDGE
EAST SPAN SEISMIC SAFETY PROJECT
SELF-ANCHORED SUSPENSION BRIDGE (SUPERSTRUCTURE & TOWER)

GIRDER FRAMING PLAN NO. 4

DISREGARD PRINTS BEARING EARLIER REVISION DATES →
REVISION DATES (PRELIMINARY STAGE ONLY): 01/15/99 | 05/15/99 | 08/02/99 | 04/20/01 | 05/31/01 | 04/30/02 | 07/01/02 | 12/19/02

SHEET 205R1 OF

ORIGINAL SCALE IN MILLIMETERS FOR REDUCED PLANS 0 10 20 30 40 50 60 70 80 90 100

FILE => L:\BB\04-012001\SAS\Contract Plans and CCO\CCO\In Progress\CCO#44\DGN\aggir04.dgn

100 % PS&E
DATE PLOTTED => 20 SEP 2007 TIME PLOTTED => 13:37:51
USERNAME => dwinrow

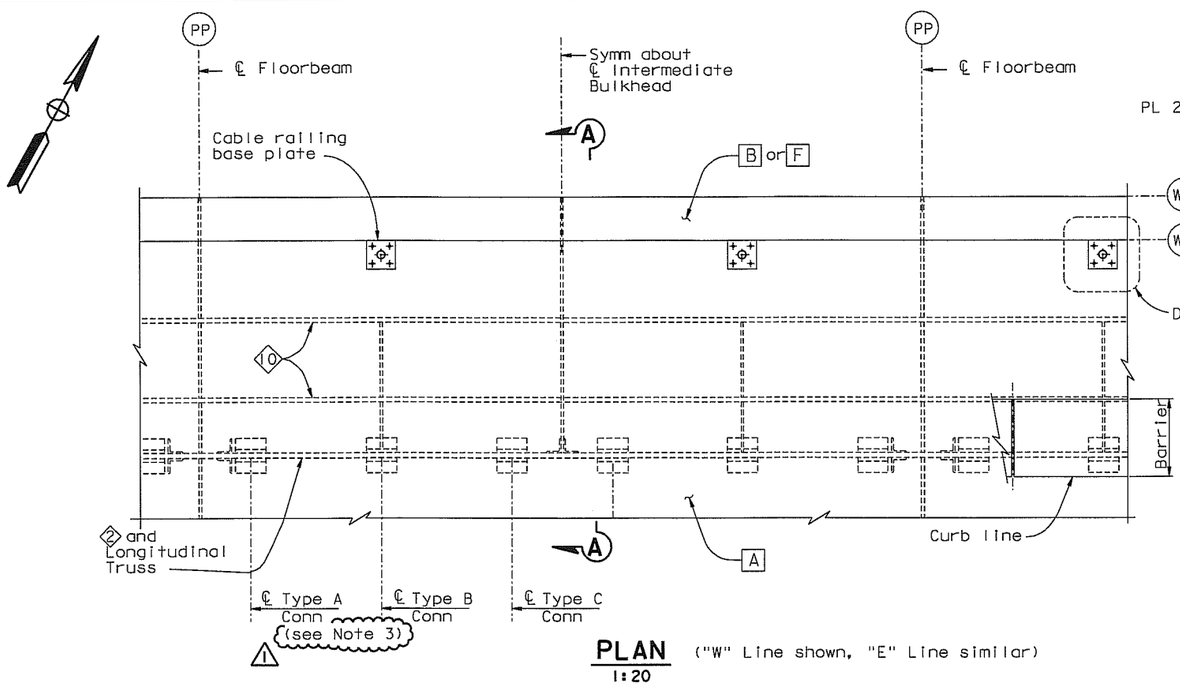

PLAN ("W" Line shown, "E" Line similar)
1:20

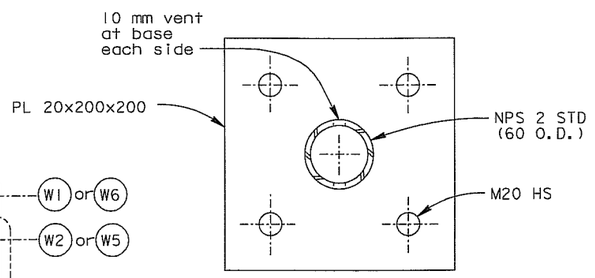

DETAIL E
1:2.5

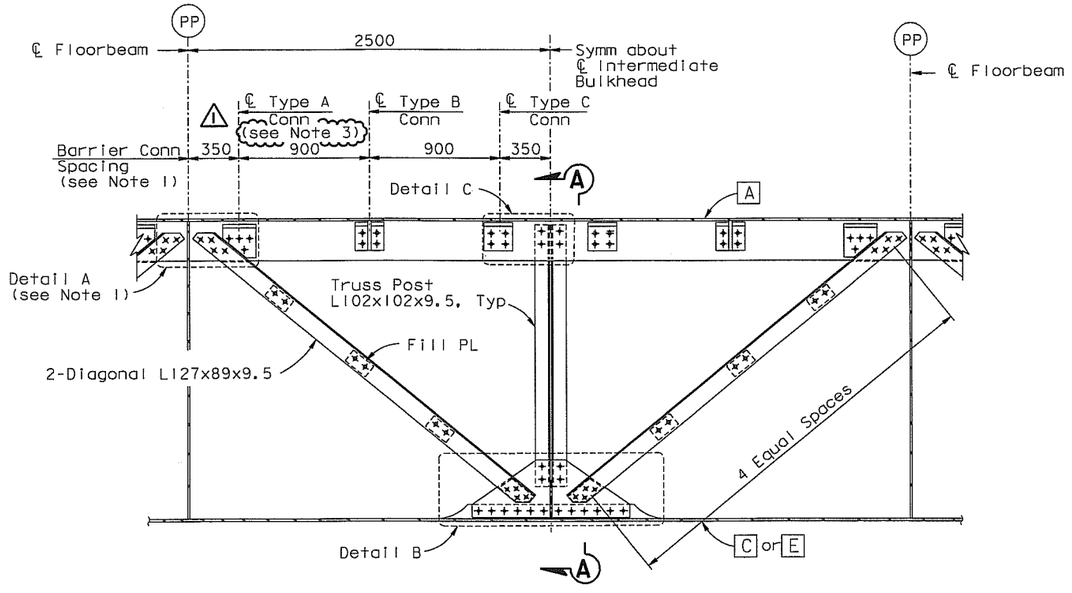

ELEVATION
LONGITUDINAL TRUSS ("W" Line Shown, "E" Line Similar)
1:20

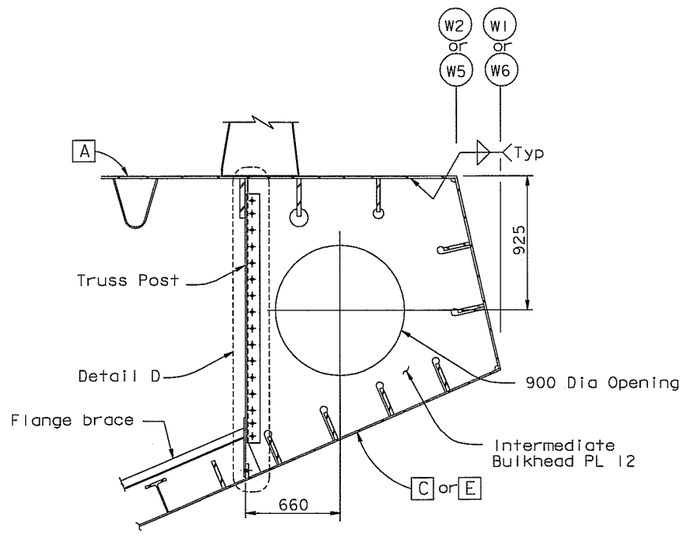

SECTION A-A
1:20

NOTES:

1. For barrier connection details, see "Typical Girder Details No. 14" sheet.
2. For Details A, B, C and D, see "Typical Girder Details No. 13" sheet.
3. For locations without a longitudinal truss, barrier connection type C shall be used in lieu of connection type A.

DIST.	COUNTY	ROUTE	KILOMETER POST TOTAL PROJECT	SHEET NO.	TOTAL SHEETS
04	SF	80	13.2/13.9	636R1	1204

George Baker
REGISTERED ENGINEER - CIVIL
12-6-04
PLANS APPROVAL DATE

REGISTERED PROFESSIONAL ENGINEER — George S. Baker — No. C57112 — Exp. 12/31/05 — CIVIL — STATE OF CALIFORNIA

The State of California or its officers or agents shall not be responsible for the accuracy or completeness of electronic copies of this plan sheet.

T.Y. LIN / MOFFATT & NICHOL
825 BATTERY STREET
SAN FRANCISCO, CA 94111

Caltrans now has a web site! To get to the web site, go to: http://www.dot.ca.gov

REGISTERED PROFESSIONAL ENGINEER — Daniel J. Turner — No. C 65033 — Exp. 06/30/09 — CIVIL — STATE OF CALIFORNIA

FOR REVISIONS ONLY

MARK	DATE	DESCRIPTIONS	BY	CH'D	CCO#
1	08/24/07	BARRIER MODIFICATIONS	GB	DT	44
		REVISIONS			

CONTRACT CHANGE ORDER NO. ____
SHEET ___ OF ___

ALL DIMENSIONS ARE IN MILLIMETERS UNLESS OTHERWISE SHOWN

SAN FRANCISCO OAKLAND BAY BRIDGE
EAST SPAN SEISMIC SAFETY PROJECT
SELF-ANCHORED SUSPENSION BRIDGE (SUPERSTRUCTURE & TOWER)

TYPICAL GIRDER DETAILS NO. 12

R. Vallzadeh/V. Toan/Y.L./W.L./F.C.
DESIGN OVERSIGHT
SIGN OFF DATE 08/24/07

	BY	CHECKED
DESIGN	G. Baker	P. Ritchie
DETAILS	C. Mauch	T. McMeans
QUANTITIES	G. Baker	M. Roberts

PREPARED FOR THE STATE OF CALIFORNIA DEPARTMENT OF TRANSPORTATION

R. Manzanarez
PROJECT ENGINEER

BRIDGE NO. 34-0006L/R
KILOMETER POST 13.2/13.9

CU 04
EA 0120F1

DISREGARD PRINTS BEARING EARLIER REVISION DATES →
REVISION DATES (PRELIMINARY STAGE ONLY): 05/19/99 | 08/02/99 | 05/31/01 | 01/08/02 | 07/10/02 | 12/19/02

SHEET 219R1 OF

Rev. Date: 5-18-98

ORIGINAL SCALE IN MILLIMETERS FOR REDUCED PLANS 0 10 20 30 40 50 60 70 80 90 100

FILE => L:\BB\04-012001\SAS\Contract Plans and CCO\CCO\In Progress\CCO#44\DGN\aggdkd06c.dgn

USERNAME => dwinrow DATE PLOTTED => 20 SEP 2007 TIME PLOTTED => 13:36:39

100% PS&E

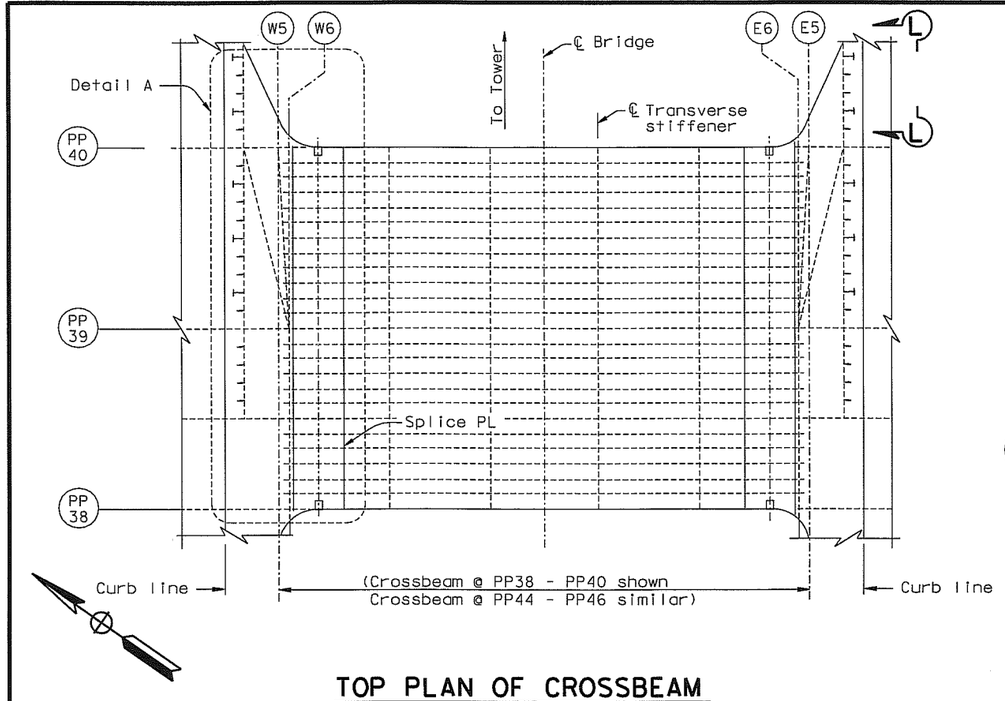

TOP PLAN OF CROSSBEAM

1:80

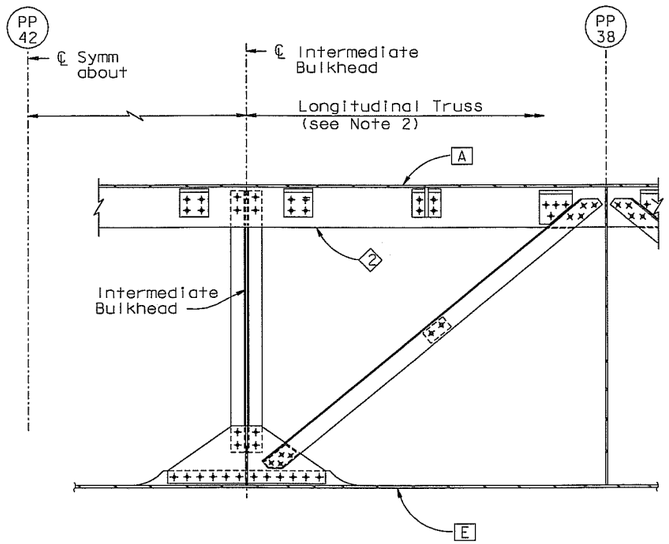

LONGITUDINAL TRUSS

SECTION A-A

1:20

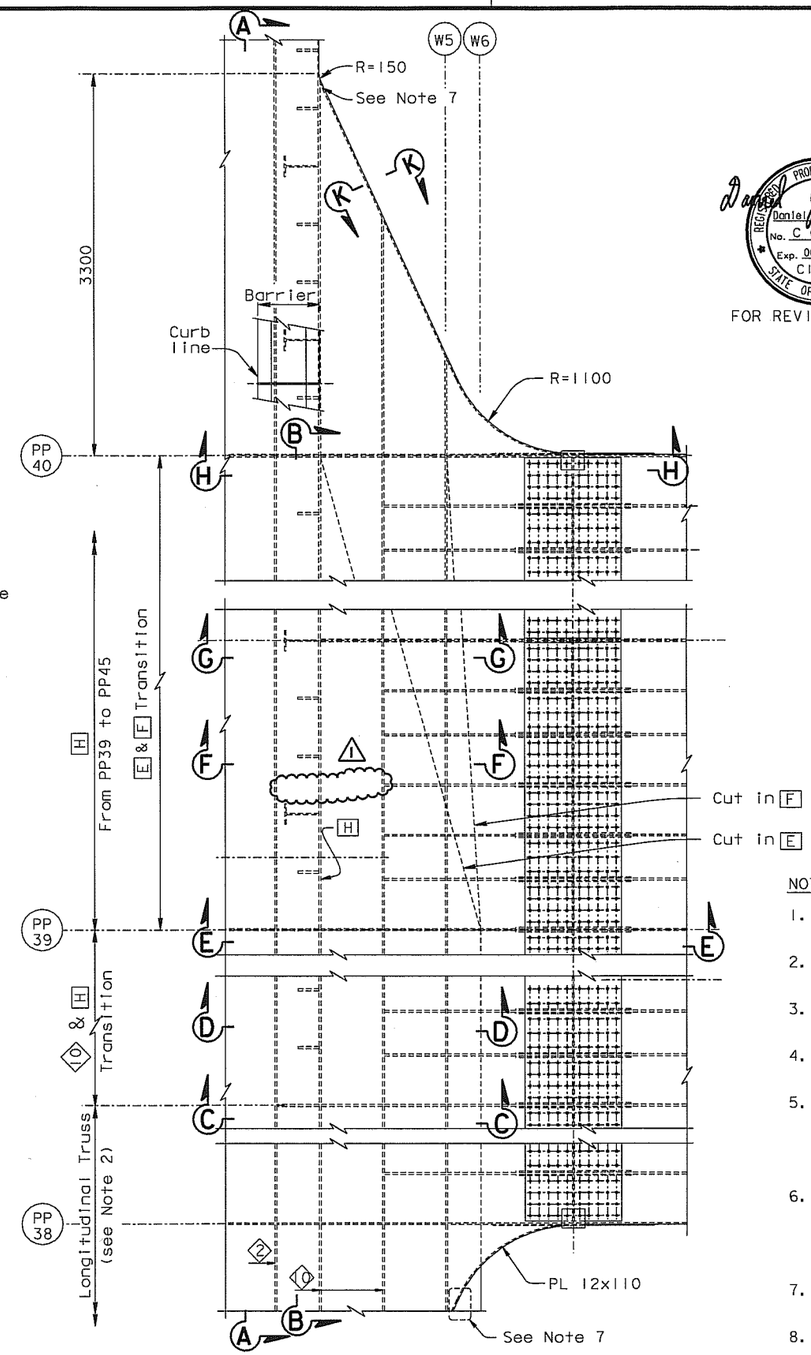

DETAIL A

1:25

ALL DIMENSIONS ARE IN MILLIMETERS UNLESS OTHERWISE SHOWN

DIST.	COUNTY	ROUTE	KILOMETER POST TOTAL PROJECT	SHEET NO.	TOTAL SHEETS
04	SF	80	13.2/13.9	671R1	1204

Caltrans Metric

George Baker
REGISTERED ENGINEER - CIVIL

12-6-04
PLANS APPROVAL DATE

REGISTERED PROFESSIONAL ENGINEER George S. Baker No. C57112 Exp. 12/31/05 CIVIL STATE OF CALIFORNIA

The State of California or its officers or agents shall not be responsible for the accuracy or completeness of electronic copies of this plan sheet.

T.Y. LIN / MOFFATT & NICHOL
825 BATTERY STREET
SAN FRANCISCO, CA 94111

Caltrans now has a web site! To get to the web site, go to: http://www.dot.ca.gov

REGISTERED PROFESSIONAL ENGINEER Daniel J. Turner No. C 65033 Exp. 06/30/09 CIVIL STATE OF CALIFORNIA

FOR REVISIONS ONLY

MARK	DATE	DESCRIPTIONS	BY	CH'D	CCO#
1	08/24/07	BARRIER MODIFICATIONS	GB	DT	44

REVISIONS

CONTRACT CHANGE ORDER NO. ____
SHEET ____ OF ____

NOTES:

1. For crossbeam details not shown, see "Typical Crossbeam Details" sheets.
2. For longitudinal truss details not shown, see "Typical Girder Details No. 13" sheet.
3. For Sections C-C, D-D, E-E, F-F, G-G and H-H, see "Girder Transition Near Tower No. 3" sheet.
4. See legend on "Girder Transition Near Tower No. 2" sheet.
5. For "Girder Transition Near Tower" sheets. All bolts shall be detailed according to the bolt dimension table, see "Typical Girder Details No. 1" sheet. All bolts are HS unless noted otherwise.
6. For "Girder Transition Near Tower" sheets unless noted otherwise all fillet welds shall be 6 mm for plate sizes not greater that 20 mm. For plates greater than 20 mm fillet welds shall be 8 mm unless noted otherwise.
7. For stiffener termination, see "Typical Girder Details No. 16" sheet.
8. For Sections B-B, K-K and L-L, see "Girder Transition Near Tower No. 2" sheet.

100 % PS&E

DATE PLOTTED => 20 SEP 2007 TIME PLOTTED => 13:34:54

USERNAME => dwinrow

SAN FRANCISCO OAKLAND BAY BRIDGE
EAST SPAN SEISMIC SAFETY PROJECT
SELF-ANCHORED SUSPENSION BRIDGE
(SUPERSTRUCTURE & TOWER)

GIRDER TRANSITION NEAR TOWER NO. 1

R. Valizadeh/V. Toan/Y.L./W.L./F.C.
DESIGN OVERSIGHT
Roger Valizadeh / Vong Toan / Y. Liu
SIGN OFF DATE 08/24/07

	BY	CHECKED
DESIGN	G. Baker	P. Ritchie
DETAILS	D. Veytsman	T. McMeans
QUANTITIES	G. Baker	M. Roberts

PREPARED FOR THE STATE OF CALIFORNIA DEPARTMENT OF TRANSPORTATION

R. Manzanarez
PROJECT ENGINEER

BRIDGE NO. 34-0006L/R
KILOMETER POST 13.2/13.9

Rev. Date: 5-18-98

ORIGINAL SCALE IN MILLIMETERS FOR REDUCED PLANS 0 10 20 30 40 50 60 70 80 90 100

CU 04
EA 0120F1

DISREGARD PRINTS BEARING EARLIER REVISION DATES

REVISION DATES (PRELIMINARY STAGE ONLY) 05/15/99 08/02/99 05/31/01 04/08/02 07/01/02 12/19/02

SHEET 254R1 OF

FILE => L:\BB\04-012001\SAS\Contract Plans and CCO\CCO\In Progress\CCO#44\DGN\agcrs10a.dgn

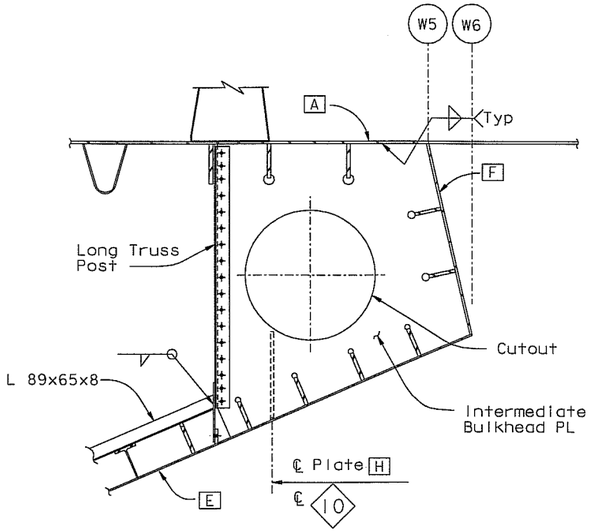

SECTION C-C
1:20

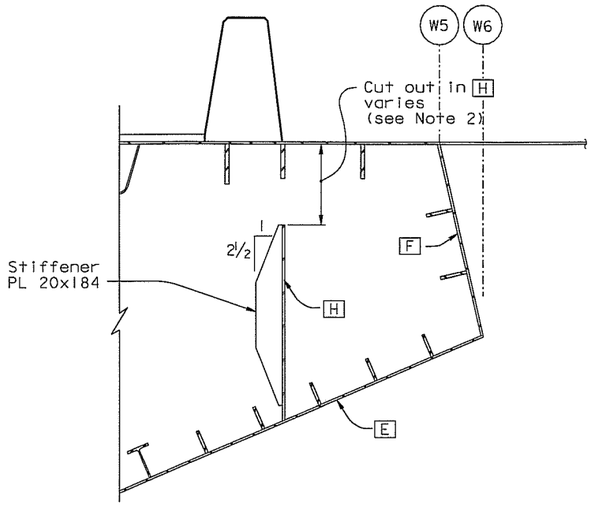

SECTION D-D
1:20

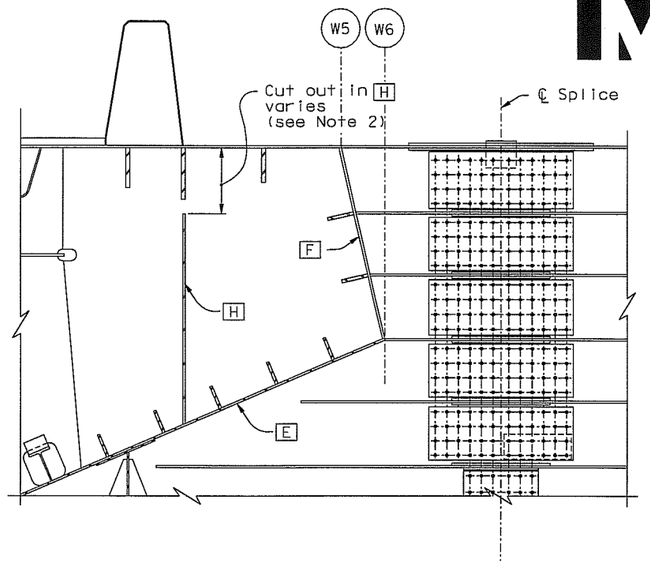

SECTION E-E
1:20

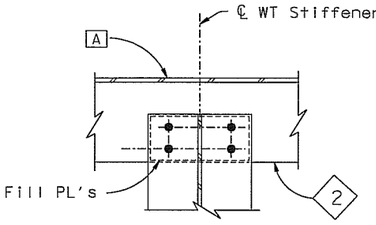

WT CONNECTION

SECTION J-J
1:10

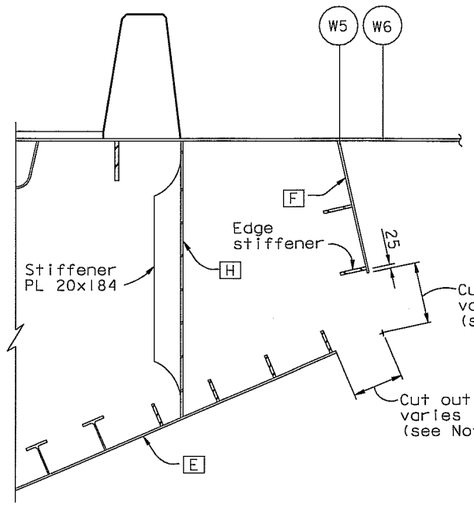

SECTION F-F
1:20

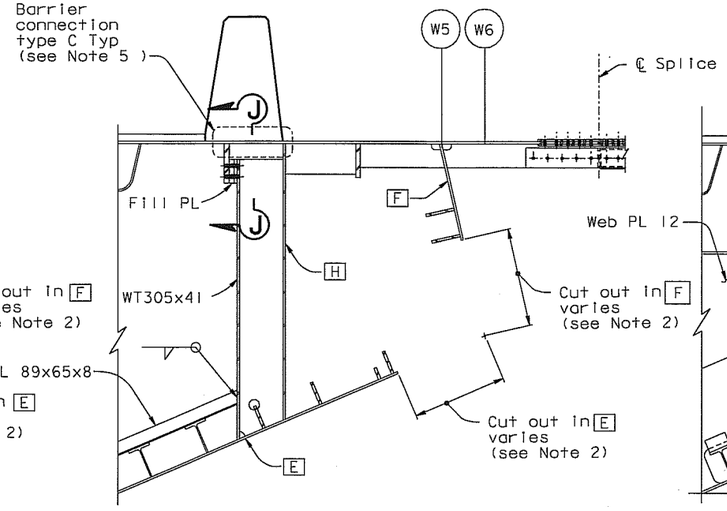

SECTION G-G
1:20

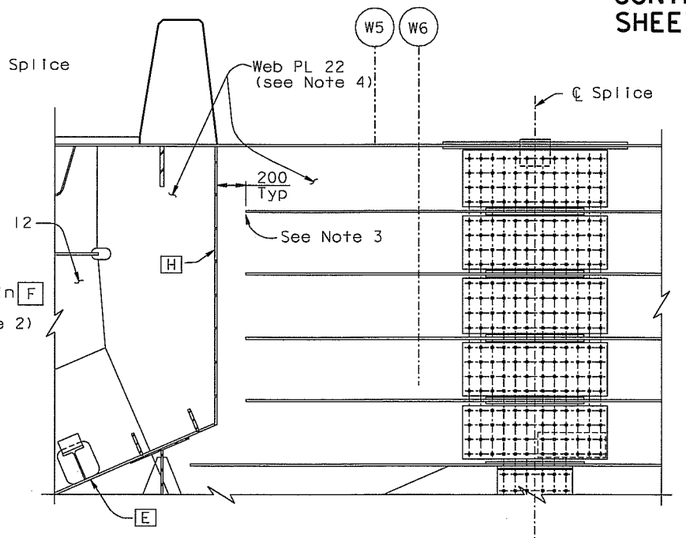

SECTION H-H
1:20

NOTES:

1. For Details not shown, see "Typical Crossbeam Details" and "Typical Girder Details"sheets.
2. For cut out in plates E F and H, see "Girder Transition Near Tower No. 2" sheet.
3. For stiffener terminations, see "Typical Girder Details No. 16" sheet.
4. For limits of floorbeam web PLs at crossbeam, see "Typical Floorbeam Details No. 2" sheet.
5. Barrier connections from PP38.5-PP45.5 shall use connection Type C. See "Typical Girder Details No. 14" sheet.

Caltrans Metric

DIST.	COUNTY	ROUTE	KILOMETER POST TOTAL PROJECT	SHEET NO.	TOTAL SHEETS
04	SF	80	13.2/13.9	673R1	1204

George Baker
REGISTERED ENGINEER - CIVIL
12-6-04
PLANS APPROVAL DATE

REGISTERED PROFESSIONAL ENGINEER — George S. Baker — No. C57112 — Exp. 12/31/05 — CIVIL — STATE OF CALIFORNIA

The State of California or its officers or agents shall not be responsible for the accuracy or completeness of electronic copies of this plan sheet.

T.Y. LIN / MOFFATT & NICHOL
825 BATTERY STREET
SAN FRANCISCO, CA 94111

Caltrans now has a web site! To get to the web site, go to: http://www.dot.ca.gov

MARK	DATE	DESCRIPTIONS	BY	CH'D	CCO#
1	08/24/07	BARRIER MODIFICATIONS	GB	DT	44
		REVISIONS			

CONTRACT CHANGE ORDER NO. ____
SHEET ___ OF ___

Daniel J. Turner — REGISTERED PROFESSIONAL ENGINEER — Daniel J. Turner — No. C 65033 — Exp. 06/30/09 — CIVIL — STATE OF CALIFORNIA

FOR REVISIONS ONLY

ALL DIMENSIONS ARE IN MILLIMETERS UNLESS OTHERWISE SHOWN

R. Valizadeh/V. Toan/Y.L./W.L./F.C.
DESIGN OVERSIGHT
Ron Valizadeh / Vong Toan / Y. Liu
SIGN OFF DATE 08/24/07

Rev. Date: 5-18-98

	BY	CHECKED
DESIGN	G. Baker	P. Ritchie
DETAILS	S. Camo	T. McMeans
QUANTITIES	G. Baker	M. Roberts

PREPARED FOR THE STATE OF CALIFORNIA DEPARTMENT OF TRANSPORTATION

R. Manzanarez
PROJECT ENGINEER

BRIDGE NO. 34-0006L/R
KILOMETER POST 13.2/13.9

SAN FRANCISCO OAKLAND BAY BRIDGE
EAST SPAN SEISMIC SAFETY PROJECT
SELF-ANCHORED SUSPENSION BRIDGE
(SUPERSTRUCTURE & TOWER)

GIRDER TRANSITION NEAR TOWER NO. 3

ORIGINAL SCALE IN MILLIMETERS FOR REDUCED PLANS 0 10 20 30 40 50 60 70 80 90 100

CU 04
EA 0120F1

DISREGARD PRINTS BEARING EARLIER REVISION DATES →

REVISION DATES (PRELIMINARY STAGE ONLY): 05/18/98 | 08/20/98 | 05/27/01 | 04/08/02 | 07/09/02 | 12/19/02

SHEET 256R1 OF

FILE => L:\BB\04-0120F1\SAS\Contract Plans and CCO\CCO\In Progress\CCO#44\DGN\agcrs09b.dgn

100 % PS&E
DATE PLOTTED => 20 SEP 2007 TIME PLOTTED => 13:30:24
USERNAME => dwinrow

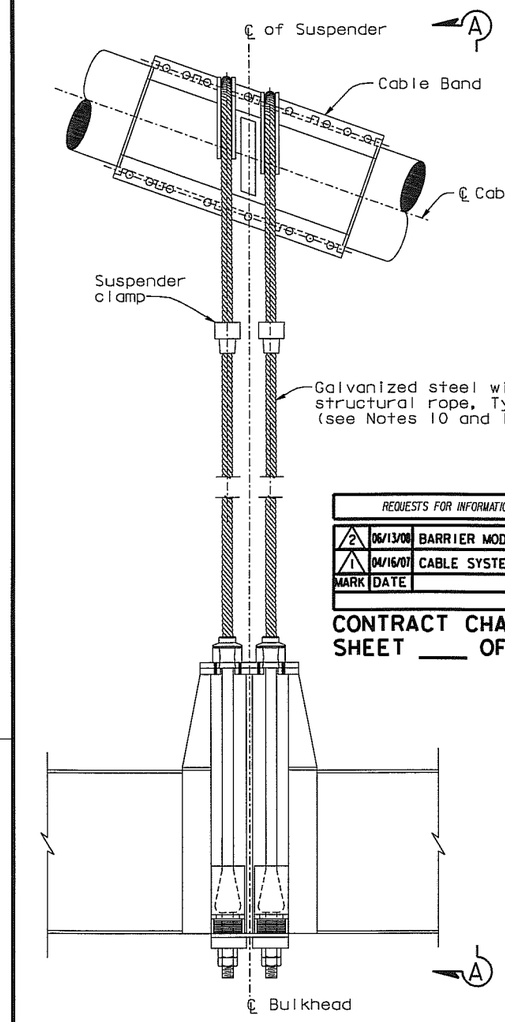

SUSPENDER TYPES 1 & 2

NTS

10. Type 1 Suspender ropes shall have a metallic area of at least 2742 mm² and a nominal diameter no greater than 78 mm. The vertical component of dead load on the four rope parts of one suspender shall be limited to 3200 kN.

11. Type 2 Suspender ropes shall have a metallic area of at least 4460 mm² and a nominal diameter no greater than 102 mm. The vertical component of dead load on the four rope parts of one suspender shall be limited to 4800 kN.

12. At locations where cable railing interferes with web PL, drilling a 10 mm Dia hole in the bracket web PL is acceptable, subject to review and approval of the Engineer.

REQUESTS FOR INFORMATION NOT ADDRESSED IN THIS CCO REMAIN IN FORCE					
MARK	DATE	REVISIONS DESCRIPTIONS	BY	CH'D	CCO#
2	06/13/08	BARRIER MODIFICATIONS	AS	MN	44
1	04/16/07	CABLE SYSTEM	GB	MN	37

CONTRACT CHANGE ORDER NO. ____
SHEET ___ OF ___

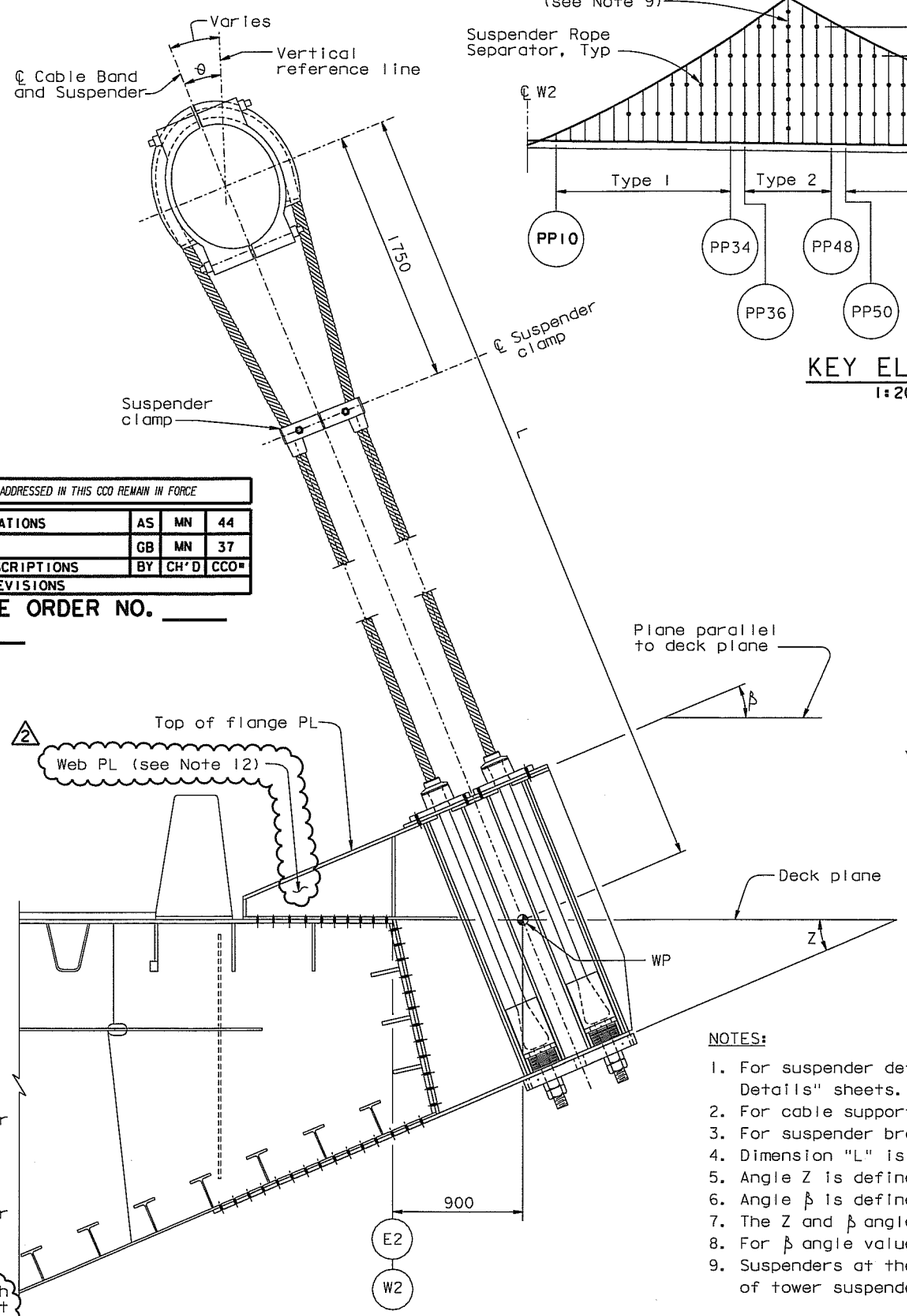

SECTION A-A (TYPICAL)

NTS

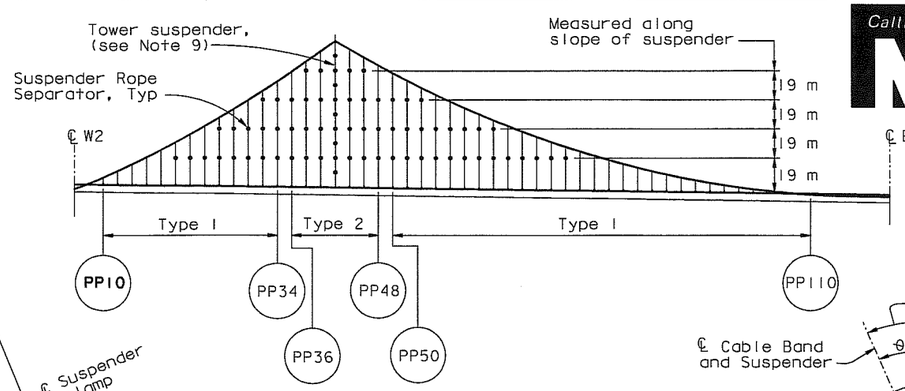

KEY ELEVATION

1:2000

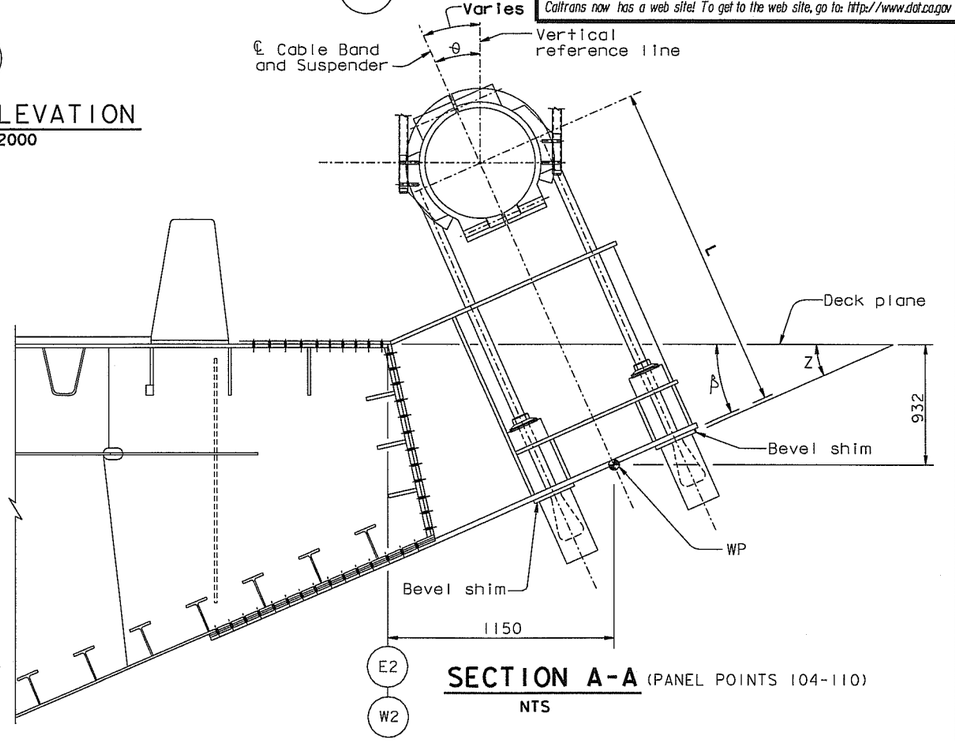

SECTION A-A (PANEL POINTS 104-110)

NTS

NOTES:

1. For suspender details, see "Suspender Assembly Details" sheets. For cable band details, see "Cable Band Details" sheets.
2. For cable support at PP 112, 114 & 116, see "Cable Bracket Details" sheets.
3. For suspender bracket details, see "Suspender Bracket Details" sheets.
4. Dimension "L" is defined as the distance between the ℄ of the cable and the WP of the suspender bracket.
5. Angle Z is defined as the angle between the deck plane and the top flange of the suspender bracket.
6. Angle β is defined as the angle between the deck plane and the top of the bevel shim.
7. The Z and β angles shall be taken as equal.
8. For β angle values, see "Suspender Bracket Details No.3" sheet.
9. Suspenders at the tower are architectural and are substantially different from all others. For details of tower suspenders, see "Suspenders At Tower Details" sheets.

DIST.	COUNTY	ROUTE	KILOMETER POST TOTAL PROJECT	SHEET NO.	TOTAL SHEETS
04	SF	80	13.2/13.9	742R2	1204

REGISTERED ENGINEER - CIVIL

12-6-04
PLANS APPROVAL DATE

Registered Professional Engineer — Marwan N. Nader — No. C 054426 — Exp. 12/31/09 — CIVIL — State of California

The State of California or its officers or agents shall not be responsible for the accuracy or completeness of electronic copies of this plan sheet.

T.Y. LIN / MOFFATT & NICHOL
825 BATTERY STREET
SAN FRANCISCO, CA 94111

Caltrans now has a web site! To get to the web site, go to: http://www.dot.ca.gov

ALL DIMENSIONS ARE IN MILLIMETERS UNLESS OTHERWISE SHOWN

DESIGN	BY M. Nader	CHECKED S. Rodriguez	
DETAILS	BY C. Mibelli	CHECKED S. Rodriguez	
QUANTITIES	BY C. Mibelli	CHECKED G. Baker	

PREPARED FOR THE STATE OF CALIFORNIA DEPARTMENT OF TRANSPORTATION

R. Manzanarez
PROJECT ENGINEER

BRIDGE NO. 34-0006L/R
KILOMETER POST 13.2/13.9

SAN FRANCISCO OAKLAND BAY BRIDGE
EAST SPAN SEISMIC SAFETY PROJECT
SELF-ANCHORED SUSPENSION BRIDGE (SUPERSTRUCTURE & TOWER)

SUSPENDER LAYOUT NO. 1

R. Vallzadeh/V. Toan/Y.L./W.L./F.C.
DESIGN OVERSIGHT
SIGN OFF DATE 06/13/08

Rev. Date: 5-18-98

ORIGINAL SCALE IN MILLIMETERS FOR REDUCED PLANS 0 10 20 30 40 50 60 70 80 90 100

CU 04
EA 0120F1

DISREGARD PRINTS BEARING EARLIER REVISION DATES →
REVISION DATES (PRELIMINARY STAGE ONLY): 01/31/99 | 05/28/99 | 08/02/99 | 05/17/01 | 04/26/02 | 07/01/02 | 12/19/02

SHEET 325R2 OF

FILE => I:\bb\04-012001\sas\contract plans and cco\cco\In progress\cco#44\update 6-13-08\dgn\agsus02.dgn

USERNAME => dwinrow DATE PLOTTED => 11 JUN 2008 TIME PLOTTED => 16:15:45

100 % PS&E

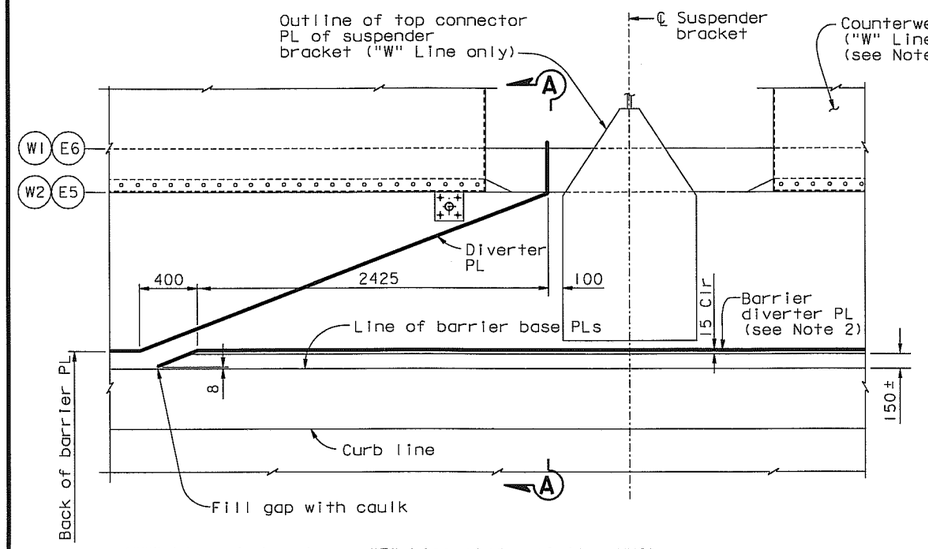

("W" Line girder shown. "E" Line girder similar UNO)

TYPICAL DRAINAGE PLAN TYPE 1 (See Notes 3 & 5)

1:20

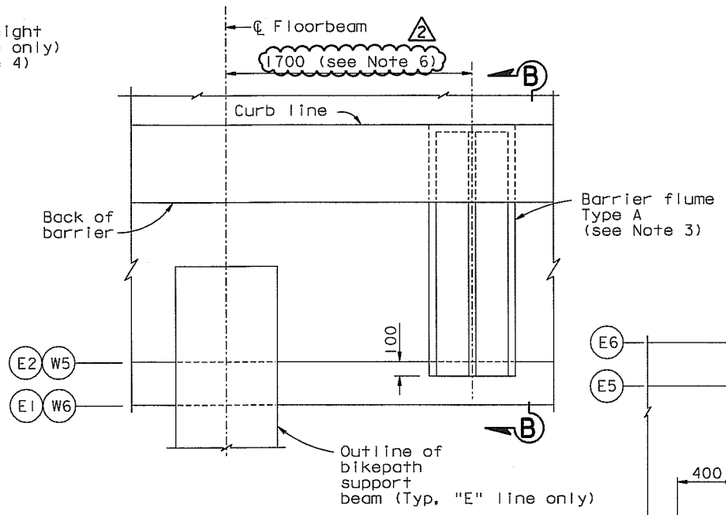

("E" Line girder shown. "W" Line girder similar UNO)

TYPICAL DRAINAGE PLAN TYPE 2

1:20 (See Note 3)

NOTES:

1. For sections A-A, A'-A', B-B, C-C, see "Deck Drainage Details No.2" sheet.
2. Barrier diverter plate shall be continuous along barriers near working lines W2 and E5, unless otherwise shown.
3. For barrier flume details and locations of drainage types 1, 2 and 3, see "Deck Drainage Details No.3" sheet.
4. For Counterweight details, see "Typical Girder Details" sheets.
5. Diverter plates may be shifted subject to review and approval by the Engineer.
6. Barrier flumes may be shifted to avoid interferences with deck level utilities and fixtures, subject to review and approval of the Engineer.

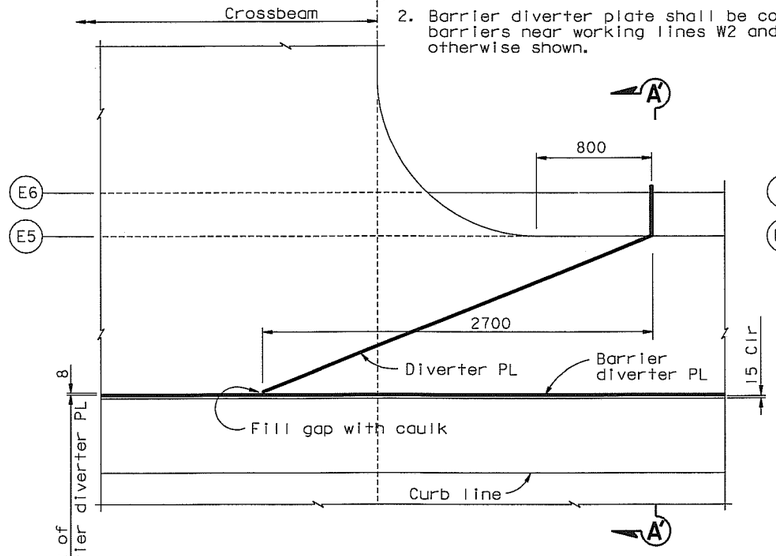

TYPICAL DRAINAGE PLAN TYPE 3 (See Notes 3 & 5)

1:20

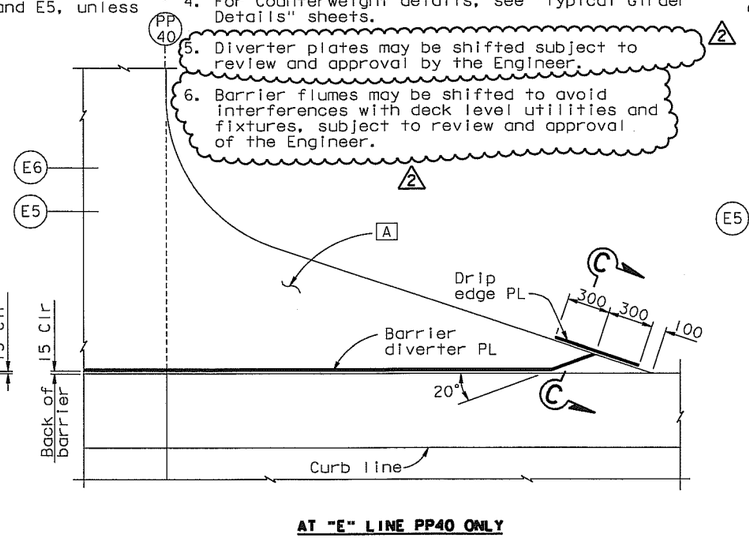

AT "E" LINE PP40 ONLY

DRAINAGE PLAN TYPE 4

1:20

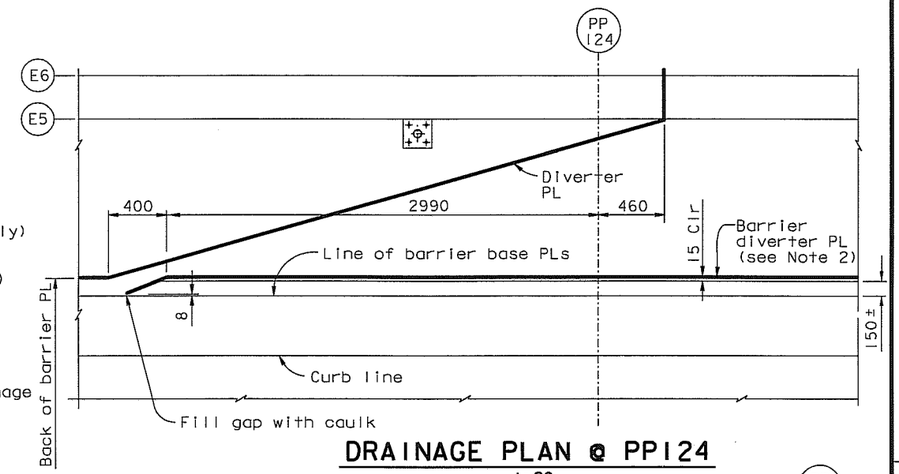

DRAINAGE PLAN @ PP124

1:20

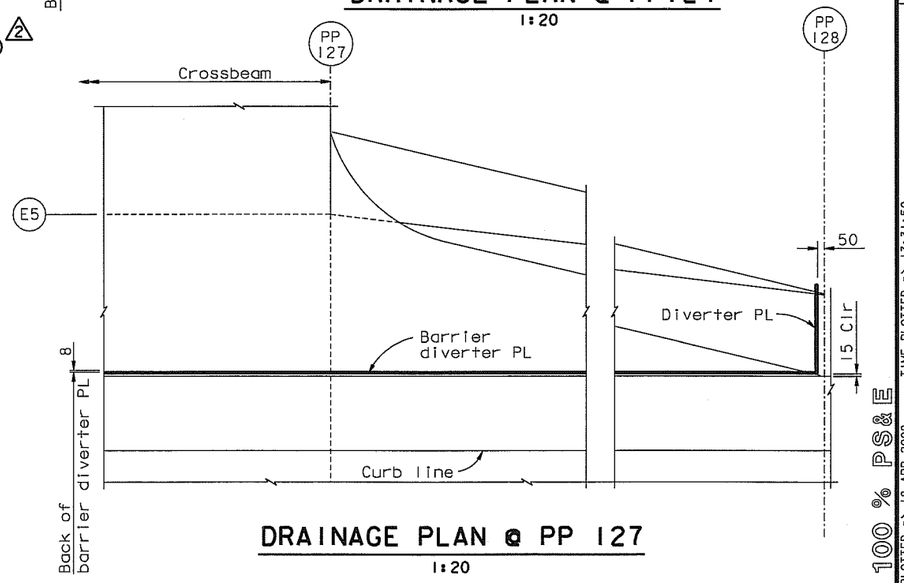

DRAINAGE PLAN @ PP 127

1:20

DIST.	COUNTY	ROUTE	KILOMETER POST TOTAL PROJECT	SHEET NO.	TOTAL SHEETS
04	SF	80	13.2/13.9	876R2	1204

George Baker
REGISTERED ENGINEER - CIVIL
12-6-04
PLANS APPROVAL DATE

REGISTERED PROFESSIONAL ENGINEER George S. Baker No. C57112 Exp. 12/31/05 CIVIL STATE OF CALIFORNIA

The State of California or its officers or agents shall not be responsible for the accuracy or completeness of electronic copies of this plan sheet.

REGISTERED PROFESSIONAL ENGINEER Daniel J. Turner No. C 65033 Exp. 06/30/09 CIVIL STATE OF CALIFORNIA

FOR REVISIONS ONLY

T.Y. LIN / MOFFATT & NICHOL
825 BATTERY STREET
SAN FRANCISCO, CA 94111

Caltrans now has a web site! To get to the web site, go to: http://www.dot.ca.gov

REQUESTS FOR INFORMATION NOT ADDRESSED IN THIS CCO REMAIN IN FORCE					
2	04/18/08	BARRIER MODIFICATIONS	AS	DT	44
1	08/24/07	BARRIER MODIFICATIONS	GB	DT	44
MARK	DATE	DESCRIPTIONS	BY	CH'D	CCO#
REVISIONS					

CONTRACT CHANGE ORDER NO. ____
SHEET ___ OF ___

R. Valizadeh/V. Toan/Y.L./W.L./F.C.
DESIGN OVERSIGHT
SIGN OFF DATE 04/18/08

Rev. Date: 5-18-98

	BY	CHECKED
DESIGN	G. Baker	T. Ho
DETAILS	D. Turner	T. Ho
QUANTITIES	G. Baker	D. Harrison

PREPARED FOR THE STATE OF CALIFORNIA DEPARTMENT OF TRANSPORTATION

R. Manzanarez
PROJECT ENGINEER

ALL DIMENSIONS ARE IN MILLIMETERS UNLESS OTHERWISE SHOWN

ORIGINAL SCALE IN MILLIMETERS FOR REDUCED PLANS 0 10 20 30 40 50 60 70 80 90 100

CU 04
EA 0120F1

FILE => I:\bb\04-012001\sas\contract plans and cco\cco\In progress\cco#44\update 04-18-08\dgn\akdkd01.dgn

SAN FRANCISCO OAKLAND BAY BRIDGE
EAST SPAN SEISMIC SAFETY PROJECT
SELF-ANCHORED SUSPENSION BRIDGE (SUPERSTRUCTURE & TOWER)

BRIDGE NO. 34-0006L/R
KILOMETER POST 13.2/13.9

DECK DRAINAGE DETAILS NO. 1

DISREGARD PRINTS BEARING EARLIER REVISION DATES

REVISION DATES (PRELIMINARY STAGE ONLY): 05/07/99 08/06/99 05/31/01 04/08/02 07/09/02 12/19/02

SHEET 459R2 OF

100% PS&E

USERNAME => vlgnotovsi DATE PLOTTED => 18 APR 2008 TIME PLOTTED => 13:31:50

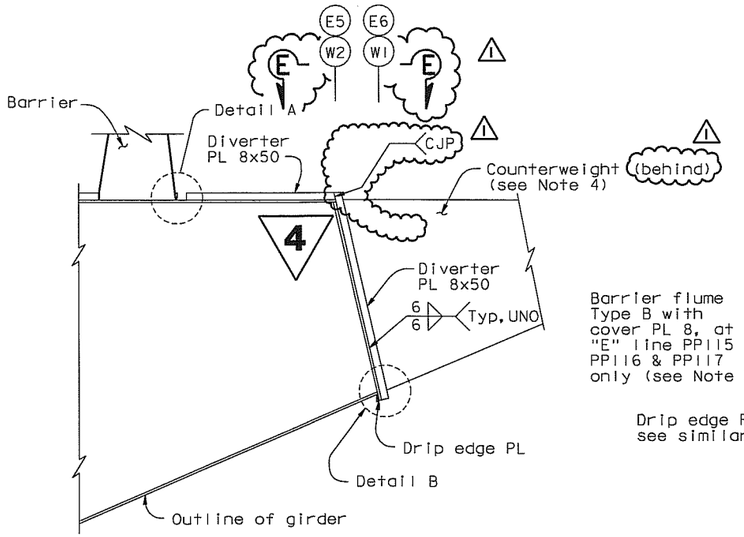

SECTION A-A (SECTION A'-A' SIMILAR) (see Note 6)

1:20

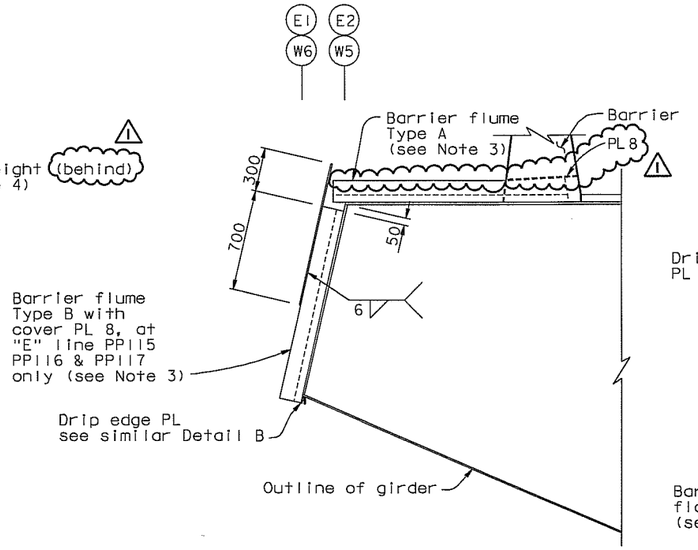

SECTION B-B

1:20

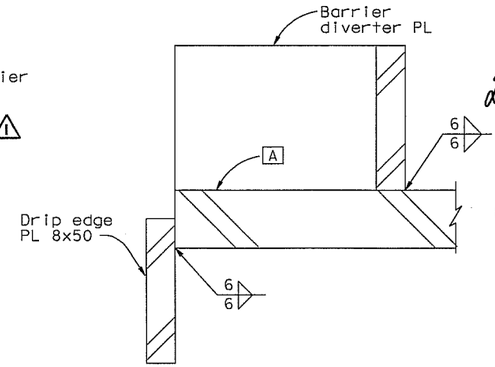

SECTION C-C

1:1

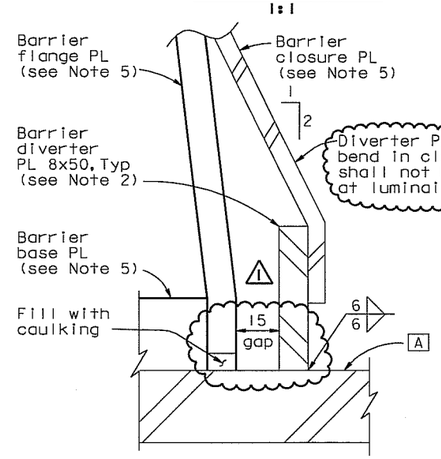

DETAIL A

1:1

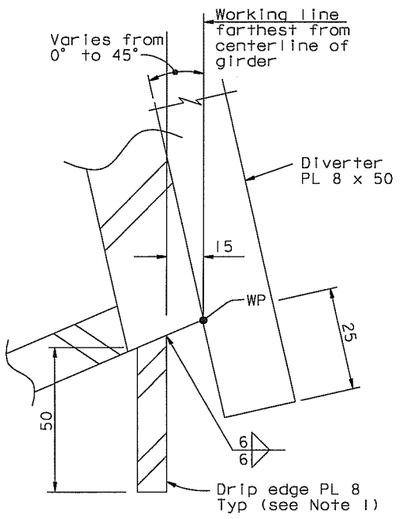

DETAIL B

1:1

NOTES:

1. Drip edge plate shall be continuous along length of typical girder at working lines W1, W6, E1 and E6. For girder transitions at pier W2, tower and east approach, drip edge plate shall be continuous along bottom corner of working line farthest from the center line of girder.
2. Barrier diverter plate shall be continuous along barriers near working lines W2 and E5, unless otherwise shown.
3. For barrier flume details, see "Deck Drainage Details No.3" sheet.
4. For counterweight details, see "Typical Girder Details" sheets.
5. For barrier details, see "Barrier Details" sheets.
6. Use similar detail where diverter PLs meet edge of girder top face at "W" line anchorage and line E5 at PP 8.5.
7. At all drip edge and diverter plate terminations, the end 40 mm of weld shall be CJP.

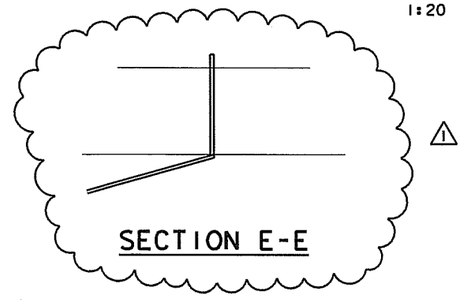

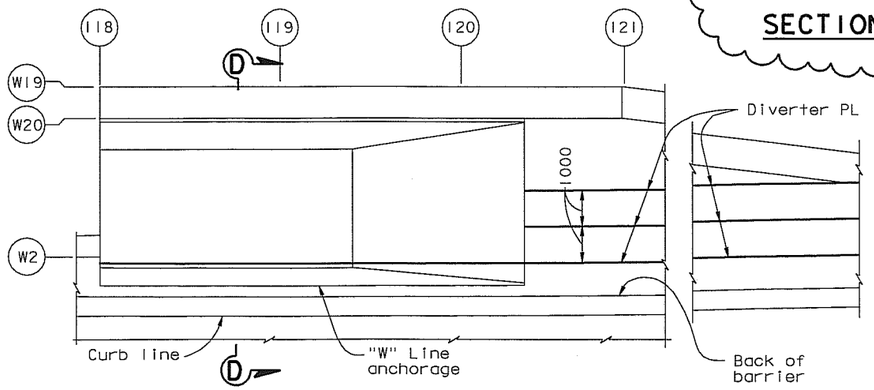

DRAINAGE PLAN AT "W" LINE ANCHORAGE

1:100

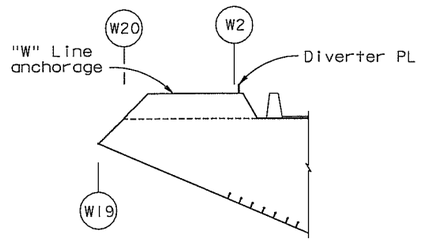

SECTION D-D

1:100

MARK	DATE	DESCRIPTIONS	BY	CH'D	CCO#
1	08/24/07	BARRIER MODIFICATIONS	GB	DT	44
		REVISIONS			

CONTRACT CHANGE ORDER NO. ____
SHEET ___ OF ___

4 REVISED PER ADDENDUM NO. 4 DATED DECEMBER 9, 2005

DIST.	COUNTY	ROUTE	KILOMETER POST TOTAL PROJECT	SHEET NO.	TOTAL SHEETS
04	SF	80	13.2/13.9	877RI	1204

Caltrans Metric

George Baker
REGISTERED ENGINEER - CIVIL
12-6-04
PLANS APPROVAL DATE

REGISTERED PROFESSIONAL ENGINEER — George S. Baker — No. C57112 — Exp. 12/31/05 — CIVIL — STATE OF CALIFORNIA

The State of California or its officers or agents shall not be responsible for the accuracy or completeness of electronic copies of this plan sheet.

REGISTERED PROFESSIONAL ENGINEER — Daniel J. Turner — No. C 65033 — Exp. 06/30/09 — CIVIL — STATE OF CALIFORNIA

FOR REVISIONS ONLY

T.Y. LIN / MOFFATT & NICHOL
825 BATTERY STREET
SAN FRANCISCO, CA 94111

Caltrans now has a web site! To get to the web site, go to: http://www.dot.ca.gov

ALL DIMENSIONS ARE IN MILLIMETERS UNLESS OTHERWISE SHOWN

R. Valizadeh/V. Toan/Y.L./W.L./F.C.
DESIGN OVERSIGHT
SIGN OFF DATE 08/24/07

	BY	CHECKED
DESIGN	G. Baker	T. Ho
DETAILS	D. Turner	T. Ho
QUANTITIES	G. Baker	D. Harrison

PREPARED FOR THE STATE OF CALIFORNIA DEPARTMENT OF TRANSPORTATION

R. Manzanarez
PROJECT ENGINEER

BRIDGE NO. 34-0006L/R
KILOMETER POST 13.2/13.9

SAN FRANCISCO OAKLAND BAY BRIDGE
EAST SPAN SEISMIC SAFETY PROJECT
SELF-ANCHORED SUSPENSION BRIDGE
(SUPERSTRUCTURE & TOWER)

DECK DRAINAGE DETAILS NO. 2

Rev. Date: 5-18-98

ORIGINAL SCALE IN MILLIMETERS FOR REDUCED PLANS 0 10 20 30 40 50 60 70 80 90 100

CU 04
EA 0120F1

DISREGARD PRINTS BEARING EARLIER REVISION DATES

REVISION DATES (PRELIMINARY STAGE ONLY): 01/07/99 | 05/05/99 | 09/07/99 | 05/21/01 | 09/07/02 | 01/07/02 | 12/19/02 | 11/13/05

SHEET 460RI OF

FILE => L:\BB\04-012001\SAS\Contract Plans and CCO\CCO\In Progress\CCO#44\DGN\akdkd02.dgn

100% PS&E
DATE PLOTTED => 20 SEP 2007
TIME PLOTTED => 13:42:47
USERNAME => dwinrow

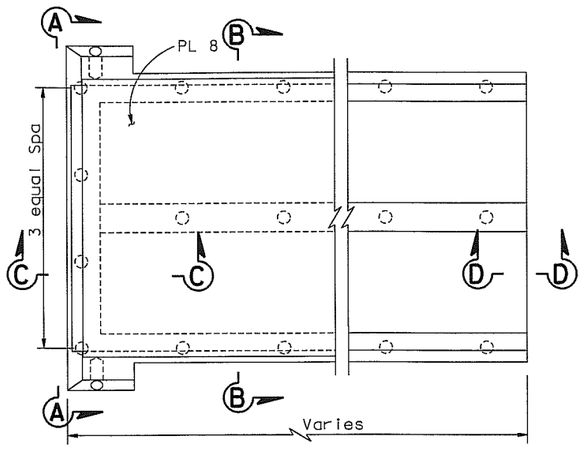

TYPE A

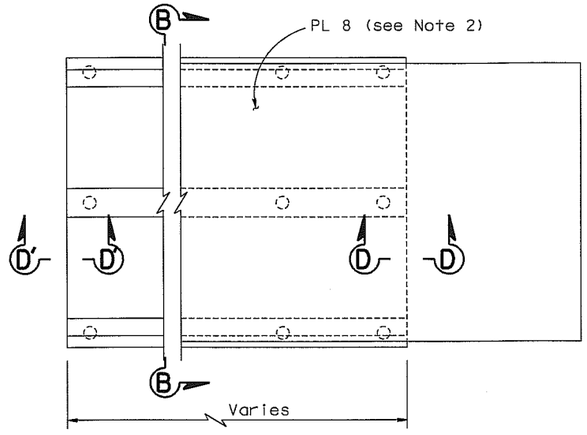

TYPE B

PLAN

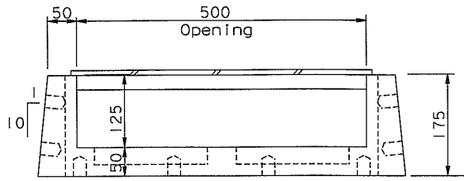

END VIEW A-A

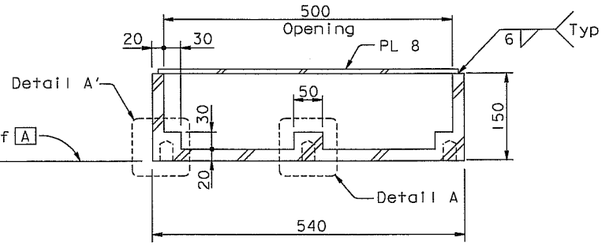

SECTION B-B

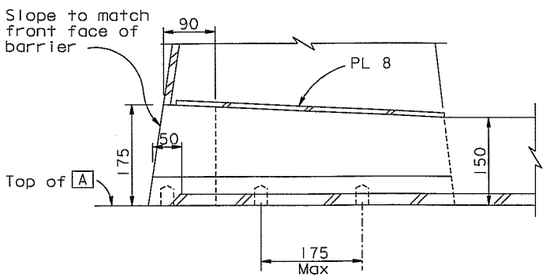

SECTION C-C

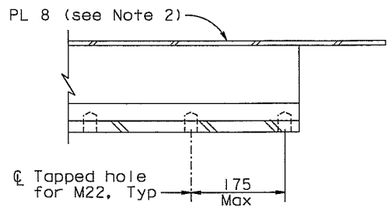

SECTION D-D (Section D'-D' similar)

BARRIER FLUME DETAILS (Drainage Type 2 only)

1:5

DRAINAGE TYPE LOCATION TABLE

See Note 1

PANEL POINT					
TYPE 1			TYPE 2		TYPE 3
(W2)		(E5)	(W5)	(E2)	(E5)
10	66	19	9	West of 11	16
12	68	25	12	19	22
14	70	31	18	25	28
16	72	37	23	29	34
18	74	49	25	35	46
20	76	55	[redacted] 2	39	52
22	78	61		45	58
24	80	67		49	64
26	82	73		55	70
28	84	79	48	59	76
30	86	85	53	65	82
32	88	91	55	69	88
34	90	97	61	75	94
36	92	103	66	79	100
38	94	[redacted] 2	71	85	106
40	96	115	73	89	112
42	98	117	78	95	120
44	100	124	84	99	127
46	102		89	105	
48	104		91	111	
50	106		96	115	
52	110		101	116	
54	112		103	117	
56	114		[redacted] 2	123	
58	116		113	125	
60	118		116	127	
62			117	128	
64			120.5		
			121		
			122		
			123		
			123.5		
			124		
			127		
			127.5		
			128		

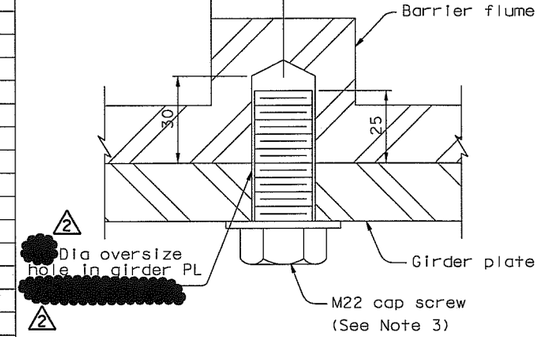

DETAIL A (A' Similar)

1:1

NOTES:

1. Drainage types 1, 2 and 3 are located to the nearest working line indicated. Types 2 and 3 are located east of the panel point unless noted otherwise. Type 1 is located west of panel point.
2. For the extent of PL 8 at Type B Flume, see Section B-B, "Deck Drainage Details No.2" sheet.
3. Cap screws shall be galvanized A307 bolts and shall be used with a thread locking system.

DIST.	COUNTY	ROUTE	KILOMETER POST TOTAL PROJECT	SHEET NO.	TOTAL SHEETS
04	SF	80	13.2/13.9	878R2	1204

George Baker
REGISTERED ENGINEER - CIVIL
12-6-04
PLANS APPROVAL DATE
The State of California or its officers or agents shall not be responsible for the accuracy or completeness of electronic copies of this plan sheet.

REGISTERED PROFESSIONAL ENGINEER — George S. Baker — No. C57112 — Exp. 12/31/05 — CIVIL — STATE OF CALIFORNIA

T.Y. LIN / MOFFATT & NICHOL
825 BATTERY STREET
SAN FRANCISCO, CA 94111

Caltrans now has a web site! To get to the web site, go to: http://www.dot.ca.gov

REGISTERED PROFESSIONAL ENGINEER — Daniel J. Turner — No. C 65033 — Exp. 06/30/09 — CIVIL — STATE OF CALIFORNIA

FOR REVISIONS ONLY

REQUESTS FOR INFORMATION NOT ADDRESSED IN THIS CCO REMAIN IN FORCE

MARK	DATE	DESCRIPTIONS	BY	CH'D	CCO#
		REVISIONS			
2	06/13/08	BARRIER MODIFICATIONS	GB	DT	44
1	08/24/07	BARRIER MODIFICATIONS	GB	DT	44

CONTRACT CHANGE ORDER NO. ____
SHEET ___ OF ___

ALL DIMENSIONS ARE IN MILLIMETERS UNLESS OTHERWISE SHOWN

R. Valizadeh/V. Toan/Y.L./W.L./F.C.
DESIGN OVERSIGHT
SIGN OFF DATE 06/13/08

	BY	CHECKED
DESIGN	G. Baker	T. Ho
DETAILS	D. Turner	T. Ho
QUANTITIES	G. Baker	D. Harrison

PREPARED FOR THE STATE OF CALIFORNIA DEPARTMENT OF TRANSPORTATION

R. Manzanarez
PROJECT ENGINEER

BRIDGE NO. 34-0006L/R
KILOMETER POST 13.2/13.9

SAN FRANCISCO OAKLAND BAY BRIDGE
EAST SPAN SEISMIC SAFETY PROJECT
SELF-ANCHORED SUSPENSION BRIDGE
(SUPERSTRUCTURE & TOWER)

DECK DRAINAGE DETAIL NO. 3

Rev. Date: 5-18-98

ORIGINAL SCALE IN MILLIMETERS FOR REDUCED PLANS 0 10 20 30 40 50 60 70 80 90 100

CU 04
EA 0120F1

DISREGARD PRINTS BEARING EARLIER REVISION DATES

REVISION DATES (PRELIMINARY STAGE ONLY)										SHEET	OF
05/13/99	08/27/99	05/31/01	04/09/02	07/01/02	12/19/02					461R2	

FILE => I:\bb\04-0120I\sas\contract plans and cco\cco\in progress\cco#44\update 6-13-08\dgn\akdkd03.dgn

DATE PLOTTED => 11 JUN 2008 TIME PLOTTED => 16:10:41
100 % PS&E
USERNAME => ptom

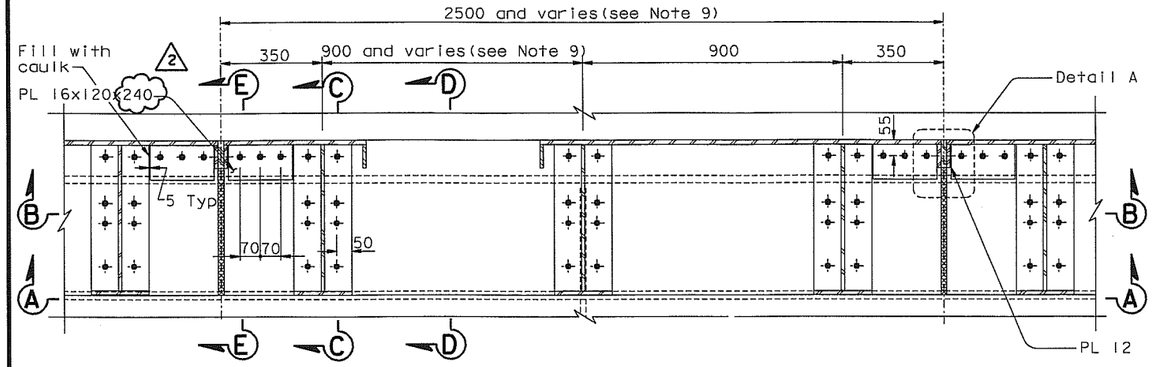

PLAN-STEEL BARRIER Type 732 Modified for (W5) (E2)

1:10

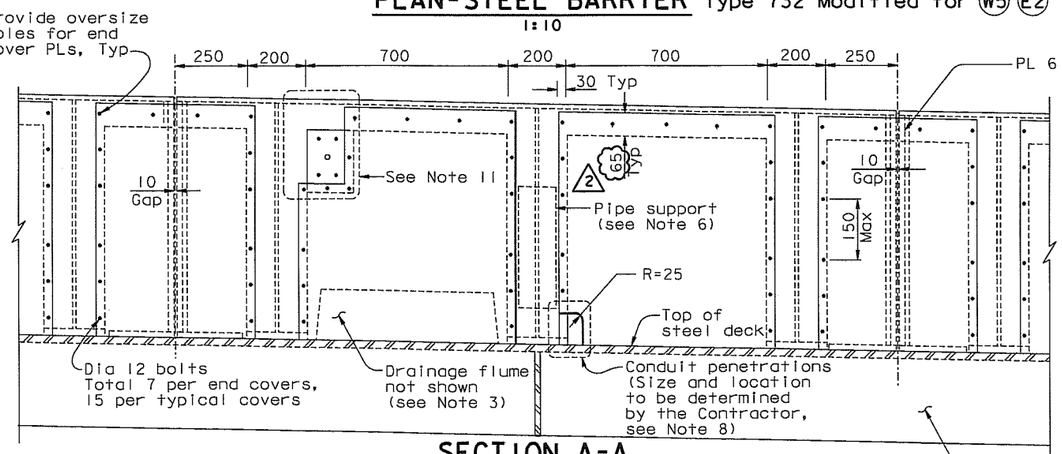

SECTION A-A

1:10

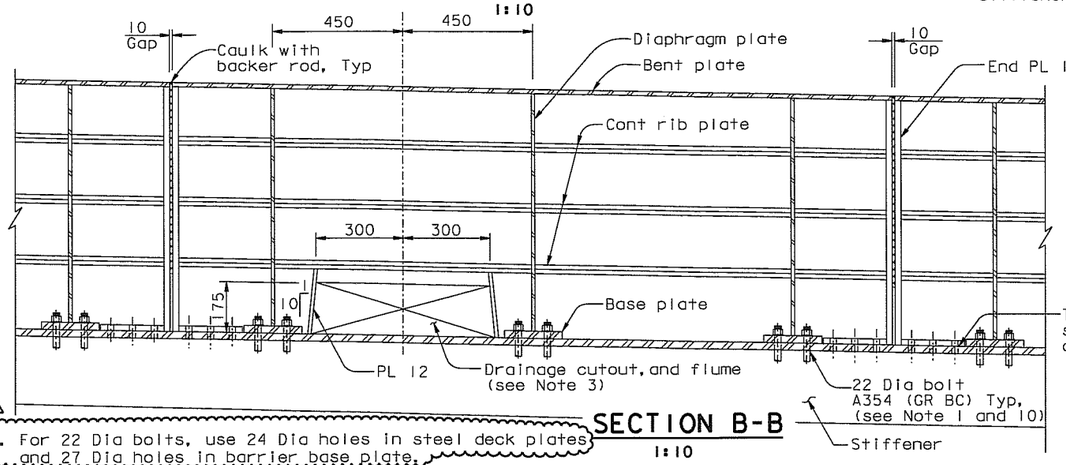

SECTION B-B

1:10

(2) 12. For 22 Dia bolts, use 24 Dia holes in steel deck plates and 27 Dia holes in barrier base plate.

13. For conduit and box support details, see "Road Plans".

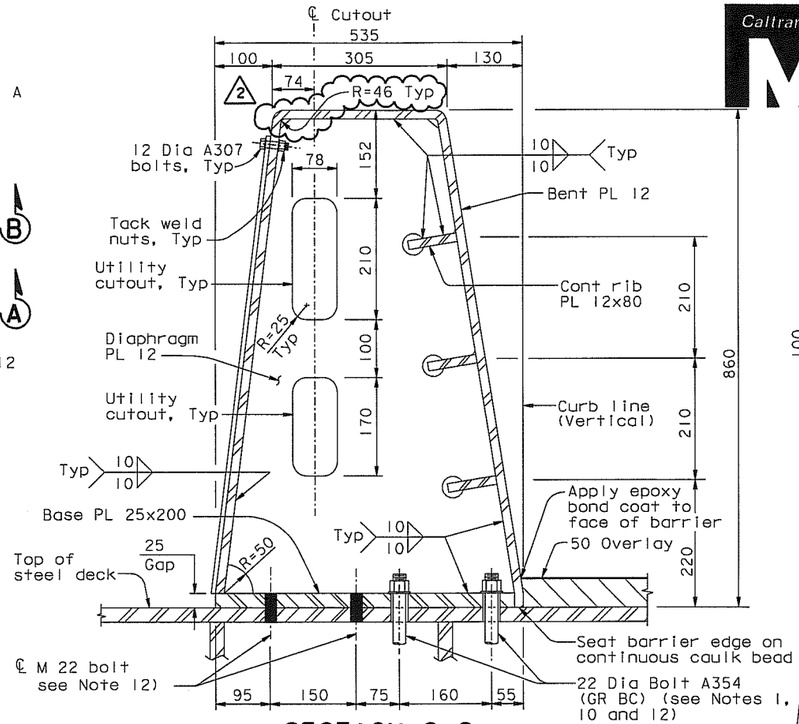

SECTION C-C

1:5

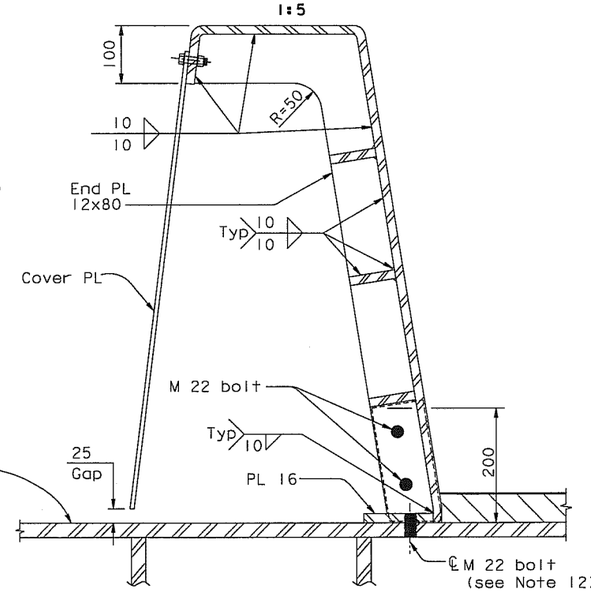

SECTION E-E

1:5

ALL DIMENSIONS ARE IN MILLIMETERS UNLESS OTHERWISE SHOWN

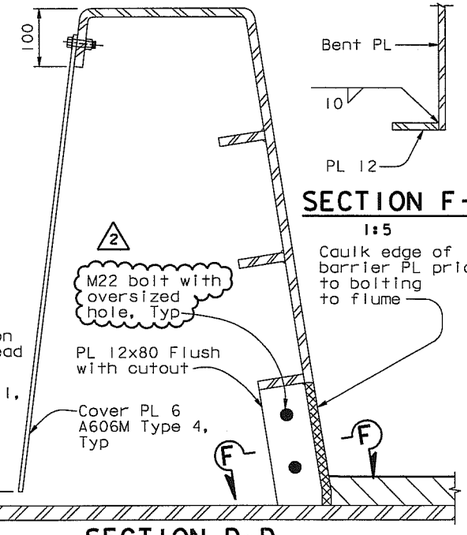

SECTION F-F

1:5

Caulk edge of barrier PL prior to bolting to flume

SECTION D-D

1:5

NOTES:

1. For steel barrier to box girder connection details, see "Typical Girder Details" sheets.
2. Inlets and flume plates exist on south barrier of each deck only.
3. For locations and details of drainage features, see "Deck Drainage Details" sheets.
4. For Detail A, see "Barrier Details No.2" sheet.
5. For conduit penetration thru deck and beveled plate detail, see "Utility Details" sheets.
6. For utilities inside barrier, pipe supports and other attachments to barrier, see "Road Plans".
7. For "Barrier Details" sheets, the Contractor shall verify all controlling field dimensions before ordering or fabricating any material.
8. The Contractor shall provide cutouts for conduit penetrations as required. Conduit penetrations shall be arranged so as to allow removal of cover plate.
9. Barrier length and diaphragm spacing varies west of PP 9 and from PP 118 to Hinge A. See Detail D on "Girder at Pier W2 No.3" sheet and "Girder Framing Plan No.4" sheet.
10. Following installation of all HS Bolts all A354 (GR BC) bolts for barrier segment shall be installed snug tight. They shall then be tightened by an additional one-half turn of the nut.
11. For recepticle mounting see "Utility Details No.2". For locations see "Road Plans".

DIST.	COUNTY	ROUTE	KILOMETER POST TOTAL PROJECT	SHEET NO.	TOTAL SHEETS
04	SF	80	13.2/13.9	889R2	1204

Caltrans Metric

REGISTERED ENGINEER - CIVIL

Tien Hung Ho No. C 43990 Exp. 6/30/09 CIVIL

12-6-04

PLANS APPROVAL DATE

The State of California or its officers or agents shall not be responsible for the accuracy or completeness of electronic copies of this plan sheet.

T.Y. LIN / MOFFATT & NICHOL
825 BATTERY STREET
SAN FRANCISCO, CA 94111

Caltrans now has a web site! To get to the web site, go to: http://www.dot.ca.gov

REQUESTS FOR INFORMATION NOT ADDRESSED IN THIS CCO REMAIN IN FORCE

MARK	DATE	DESCRIPTIONS	BY	CH'D	CCO#
		REVISIONS			
(2)	04/18/08	BARRIER MODIFICATIONS	GB	TH	44
(1)	08/24/07	BARRIER MODIFICATIONS	GB	TH	44

CONTRACT CHANGE ORDER NO. ____
SHEET ___ OF ___

R. Valizadeh/V. Toan/Y.L./W.L./F.C.
DESIGN OVERSIGHT
SIGN OFF DATE 04/18/08

Rev. Date: 5-18-98

	BY	CHECKED
DESIGN	T. Ho	M. Nader
DETAILS	G. Baker	M. Nader
QUANTITIES	C. Shi	K. Cormier

PREPARED FOR THE STATE OF CALIFORNIA DEPARTMENT OF TRANSPORTATION

R. Manzanarez
PROJECT ENGINEER

BRIDGE NO. 34-0006L/R
KILOMETER POST 13.2/13.9

SAN FRANCISCO OAKLAND BAY BRIDGE
EAST SPAN SEISMIC SAFETY PROJECT
SELF-ANCHORED SUSPENSION BRIDGE (SUPERSTRUCTURE & TOWER)

BARRIER DETAILS NO. 1

ORIGINAL SCALE IN MILLIMETERS FOR REDUCED PLANS 0 10 20 30 40 50 60 70 80 90 100

CU 04
EA 0120F1

DISREGARD PRINTS BEARING EARLIER REVISION DATES

REVISION DATES (PRELIMINARY STAGE ONLY): 01/15/99 05/13/99 08/02/99 04/08/02 07/01/02 12/19/02

SHEET 472R2 OF

FILE => L:\BB\04-012001\SAS\Contract Plans and CCO\CCO\In Progress\CCO#44\Update 04-18-08\DGN\akbar01.dgn

USERNAME => vignatovsky DATE PLOTTED => 18 APR 2008 TIME PLOTTED => 13:30:13

100% PS&E

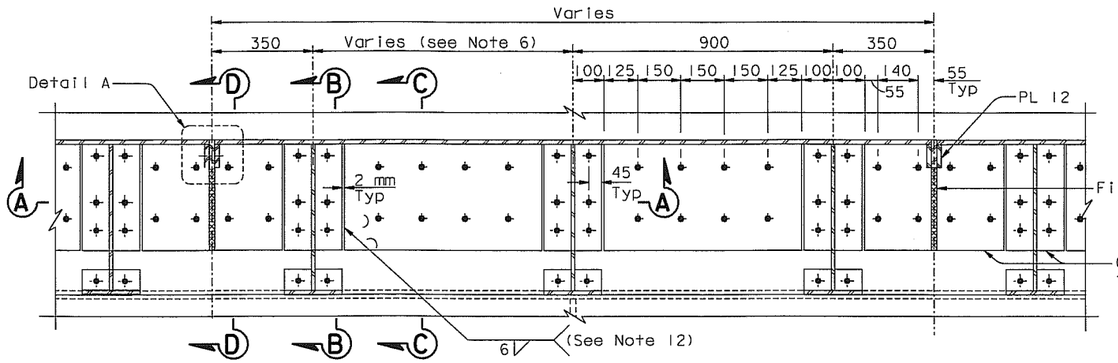

PLAN-STEEL BARRIER Type 732 Modified for (W2) (E5)

1:10

6. Barrier length and diaphragm spacing varies west of PP 9 and from PP 118 to Hinge A. See Detail D on "Girder At Pier W2 No. 3" sheet. and "Girder Framing Plan No.4" sheet.
7. For call box penetrations and locations see "Road Plans".
8. Cut line for cover PLs located 3300 west of panel points listed under Type 1 in "Drainage Type Location Table" on "Deck Drainage Detail No.3" sheet.
9. For details not shown, see "Barrier Details No.1" sheet.
10. For 22 Dia bolts, use 24 Dia holes in steel deck plates and 27 Dia holes in barrier base plate.
11. For conduit and box support details, see "Road Plans"
12. In lieu of the 6 mm fillet weld, an equivalent PJP weld may be provided.

REQUESTS FOR INFORMATION NOT ADDRESSED IN THIS CCO REMAIN IN FORCE					
2	07/16/08	BARRIER MODIFICATIONS	GB	TH	44
1	08/24/07	BARRIER MODIFICATIONS	GB	TH	44
MARK	DATE	DESCRIPTIONS	BY	CH'D	CCO#
		REVISIONS			

CONTRACT CHANGE ORDER NO. ____
SHEET ___ OF ___

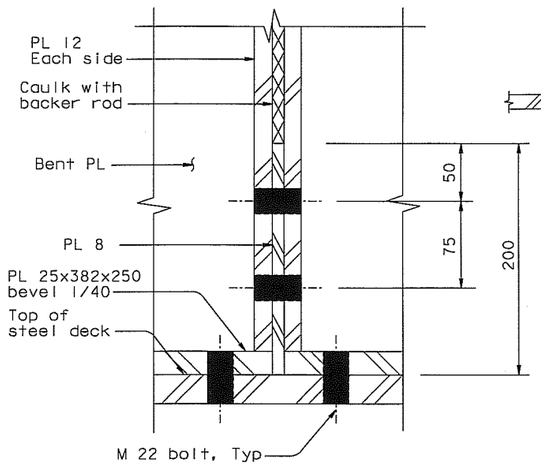

SECTION E-E

1:2.5

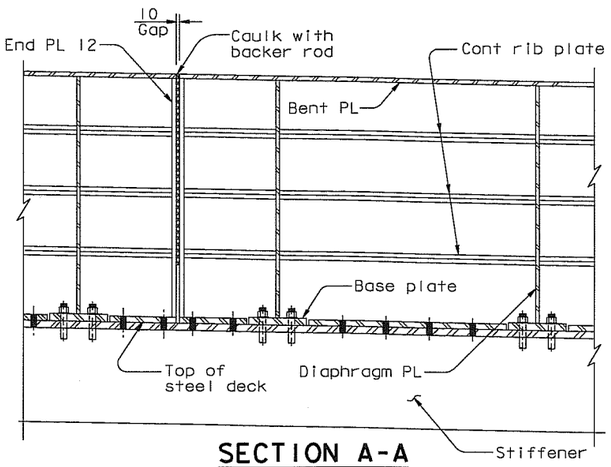

SECTION A-A

1:10

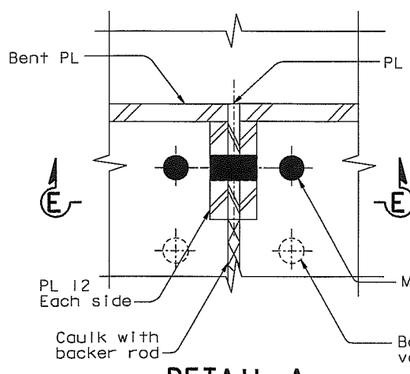

DETAIL A

1:2.5

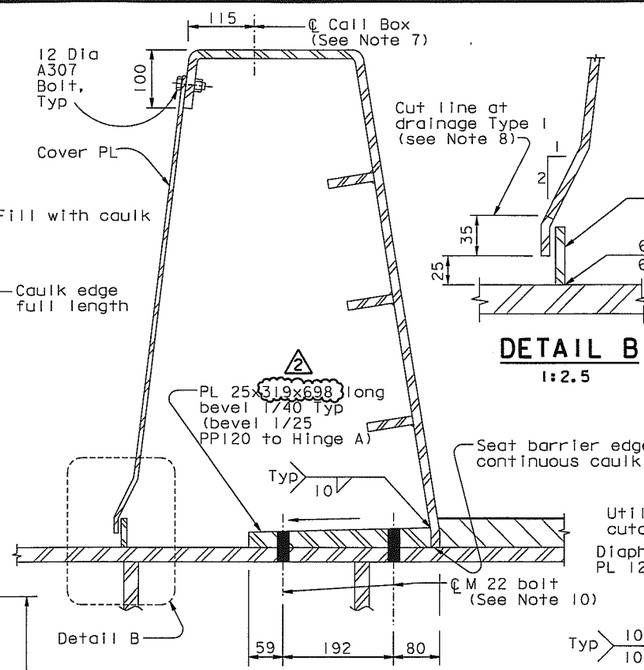

SECTION C-C

1:5

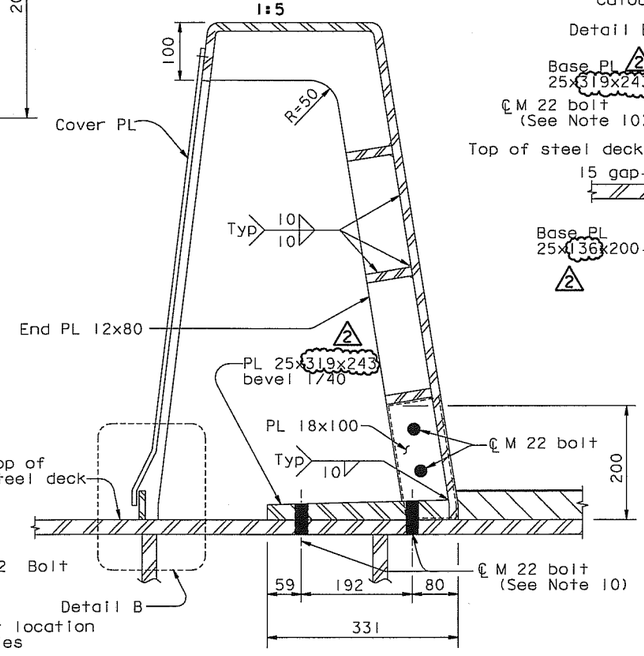

SECTION D-D

1:5

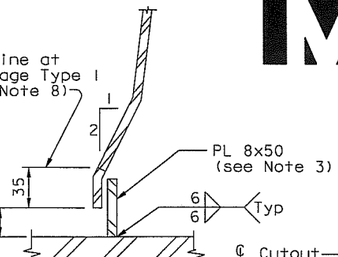

DETAIL B

1:2.5

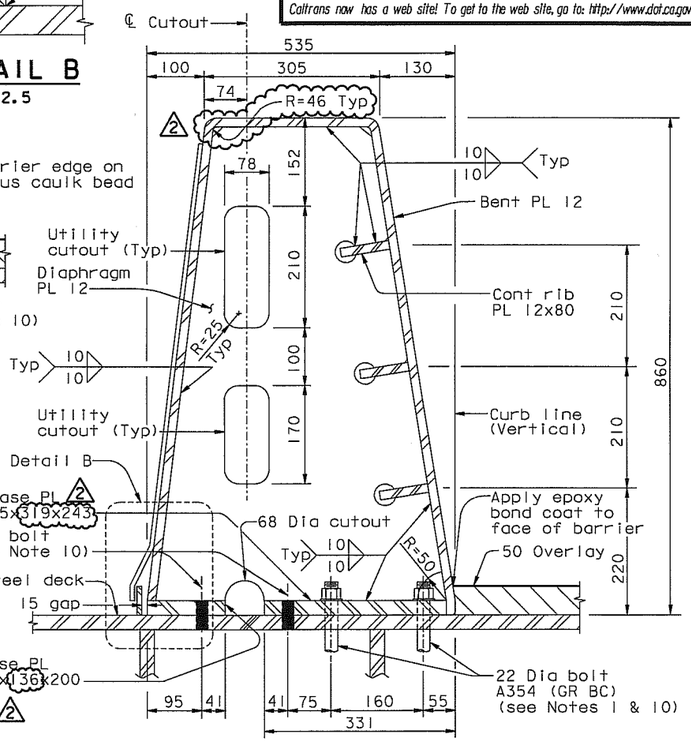

SECTION B-B

1:5

NOTES:

1. For steel barrier to box girder connection details, see "Typical Girder Details" and "Barrier Details No.1" sheets.
2. Inlets and flume plates exist on south barrier of each deck only.
3. For locations of drainage features, see "Deck Drainage Details No. 2" sheet. Slot cover over Diverter plate where shown on "Deck Drainage Details No.1" sheet.
4. For conduit penetration thru deck and beveled plate detail, see "Utility Detail" sheets.
5. For utilities inside barrier, see "Road Plans".

ALL DIMENSIONS ARE IN MILLIMETERS UNLESS OTHERWISE SHOWN

Caltrans Metric

DIST.	COUNTY	ROUTE	KILOMETER POST TOTAL PROJECT	SHEET NO.	TOTAL SHEETS
04	SF	80	13.2/13.9	890R2	1204

REGISTERED ENGINEER - CIVIL
Tien Hung Ho No. C 43990 Exp. 6/30/09 CIVIL STATE OF CALIFORNIA
12-6-04
PLANS APPROVAL DATE
The State of California or its officers or agents shall not be responsible for the accuracy or completeness of electronic copies of this plan sheet.

T.Y. LIN / MOFFATT & NICHOL
825 BATTERY STREET
SAN FRANCISCO, CA 94111

Caltrans now has a web site! To get to the web site, go to: http://www.dot.ca.gov

100 % PS&E
DATE PLOTTED => 16 JUL 2008 TIME PLOTTED => 10:26:27
USERNAME => ptom

R. Valizadeh/V. Toan/Y.L./W.L./F.C.
DESIGN OVERSIGHT
SIGN OFF DATE 07/16/08
Rev. Date: 5-18-98

	BY	CHECKED
DESIGN	T. Ho	M. Nader
DETAILS	G. Baker	M. Nader
QUANTITIES	C. Shi	K. Cormier

PREPARED FOR THE STATE OF CALIFORNIA DEPARTMENT OF TRANSPORTATION

R. Manzanarez
PROJECT ENGINEER

BRIDGE NO. 34-0006L/R
KILOMETER POST 13.2/13.9

SAN FRANCISCO OAKLAND BAY BRIDGE
EAST SPAN SEISMIC SAFETY PROJECT
SELF-ANCHORED SUSPENSION BRIDGE (SUPERSTRUCTURE & TOWER)

BARRIER DETAILS NO. 2

ORIGINAL SCALE IN MILLIMETERS FOR REDUCED PLANS 0 10 20 30 40 50 60 70 80 90 100

CU 04
EA 0120F1

DISREGARD PRINTS BEARING EARLIER REVISION DATES

REVISION DATES (PRELIMINARY STAGE ONLY): 01/25/99 05/20/99 05/28/99 05/31/01 04/30/02 07/01/02 12/19/02

SHEET 473R2 OF

FILE => I:\bb\04-0120I\sas\contract plans and cco\cco\In progress\cco#44\update 07-16-08\dgn\akbar03.dgn

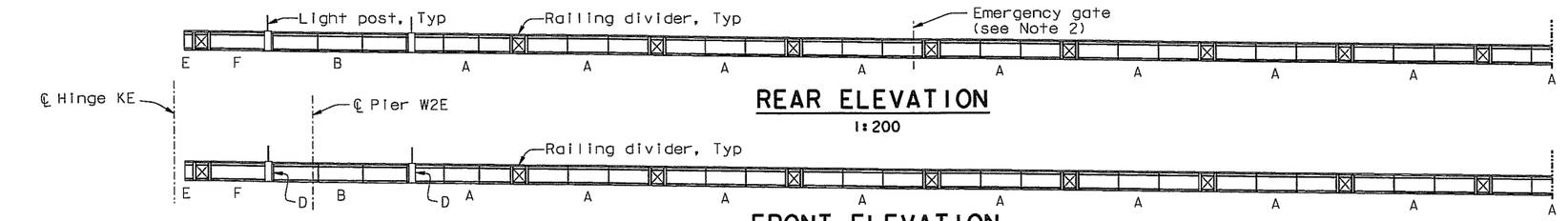

REAR ELEVATION
1:200

FRONT ELEVATION
1:200

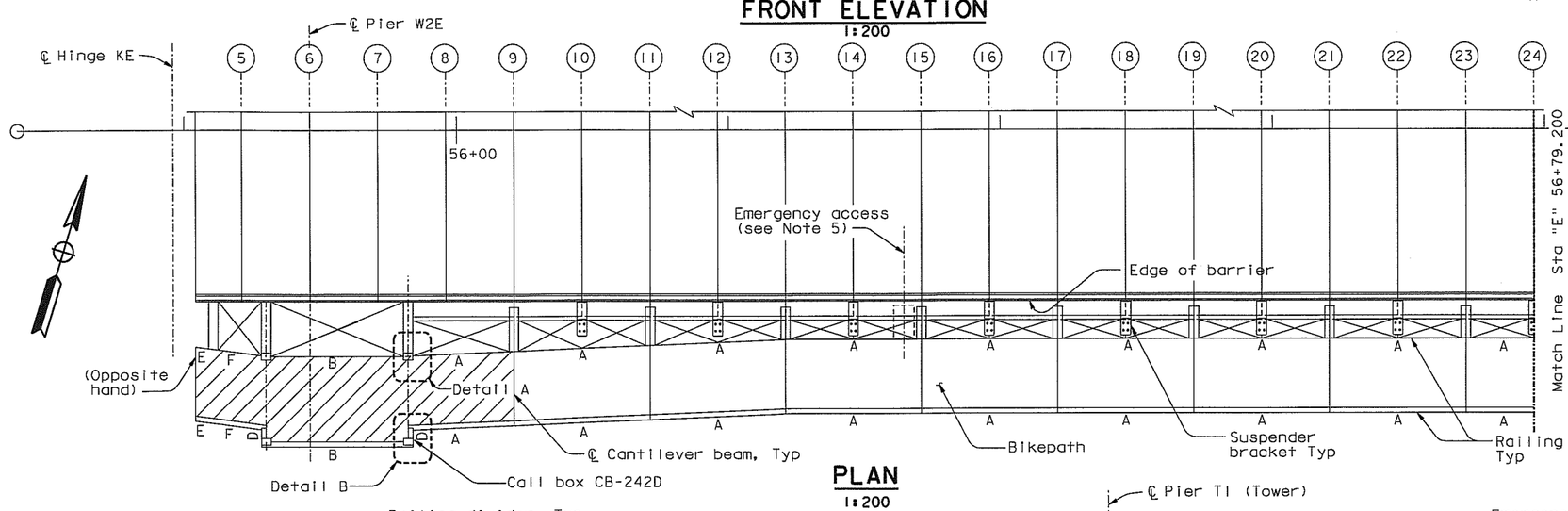

PLAN
1:200

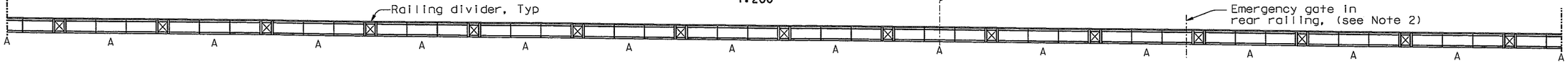

FRONT & REAR ELEVATION
1:200

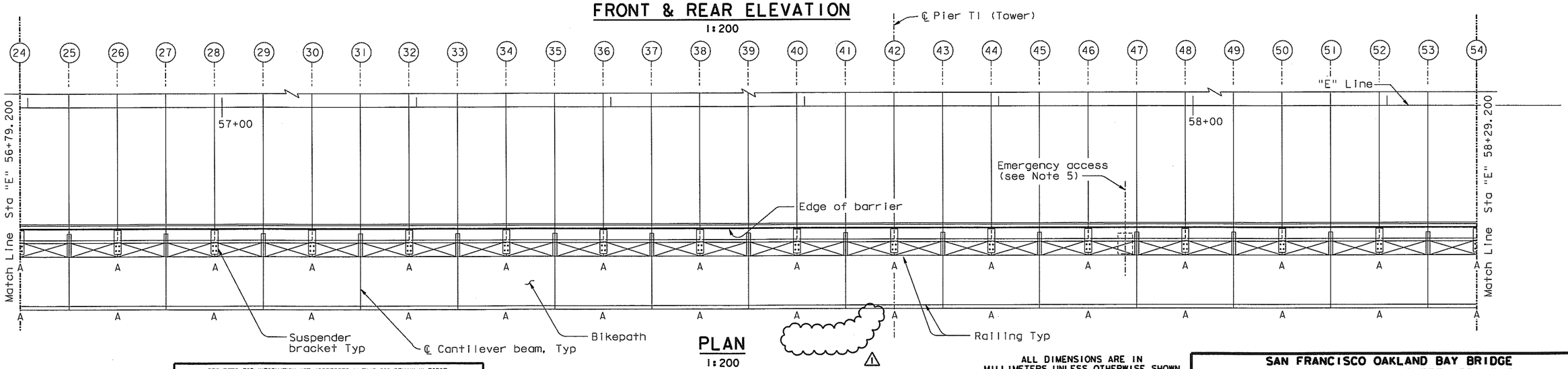

PLAN
1:200

LEGEND:

A Indicates Railing Panel Type Number

(51) Indicates Panel Point

Indicates area of bikepath (including railing) to be installed by others after demolishing of existing structure

NOTES:

1. For railing panel Type A through Type F, see "Railing Details No.1" sheet.
2. For emergency gate details, see "Railing Details No.5" sheet.
3. For "Detail A" and "Detail B", see "Railing Details No.4" sheet.
4. For call box location and details, see "Road Plans".
5. For emergency access platform details, see "Railing Layout No.3" sheet.

DIST.	COUNTY	ROUTE	KILOMETER POST TOTAL PROJECT	SHEET NO.	TOTAL SHEETS
04	SF	80	13.2/13.9	895R1	1204

REGISTERED ENGINEER - CIVIL

Tien Hung Ho
No. C 43990
Exp. 6/30/09
CIVIL
STATE OF CALIFORNIA
REGISTERED PROFESSIONAL ENGINEER

12-6-04
PLANS APPROVAL DATE

The State of California or its officers or agents shall not be responsible for the accuracy or completeness of electronic copies of this plan sheet.

T.Y. LIN / MOFFATT & NICHOL
825 BATTERY STREET
SAN FRANCISCO, CA 94111

Caltrans now has a web site! To get to the web site, go to: http://www.dot.ca.gov

ALL DIMENSIONS ARE IN MILLIMETERS UNLESS OTHERWISE SHOWN

REQUESTS FOR INFORMATION NOT ADDRESSED IN THIS CCO REMAIN IN FORCE

MARK	DATE	DESCRIPTIONS	BY	CH'D	CCO#
1	07/16/08	BARRIER MODIFICATIONS	TH	JD	44

REVISIONS

CONTRACT CHANGE ORDER NO. ____
SHEET ____ OF ____

	BY	CHECKED
DESIGN	T. Ho	C. Redfield
DETAILS	R. Xu	C. Redfield
QUANTITIES	G. Baker	K. Cormier

R. Valizadeh/V. Toan/Y.L./W.L./F.C.
DESIGN OVERSIGHT
SIGN OFF DATE 07/16/08

Rev. Date: 5-18-98

PREPARED FOR THE STATE OF CALIFORNIA DEPARTMENT OF TRANSPORTATION

R. Manzanarez
PROJECT ENGINEER

BRIDGE NO. 34-0006L/R
KILOMETER POST 13.2/13.9

CU 04
EA 0120F1

DISREGARD PRINTS BEARING EARLIER REVISION DATES

REVISION DATES (PRELIMINARY STAGE ONLY): 05/05/99 08/02/99 05/24/01 04/08/02 07/01/02 12/19/02

SHEET 478R1 OF

ORIGINAL SCALE IN MILLIMETERS FOR REDUCED PLANS 0 10 20 30 40 50 60 70 80 90 100

FILE => I:\bb\04-0120I\sas\contract plans and cco\cco\in progress\cco#44\update 07-16-08\dgn\akrlg01.dgn

SAN FRANCISCO OAKLAND BAY BRIDGE
EAST SPAN SEISMIC SAFETY PROJECT
SELF-ANCHORED SUSPENSION BRIDGE
(SUPERSTRUCTURE & TOWER)

RAILING LAYOUT NO. 1

100% PS&E

USERNAME => ptom DATE PLOTTED => 16 JUL 2008 TIME PLOTTED => 10:28:33

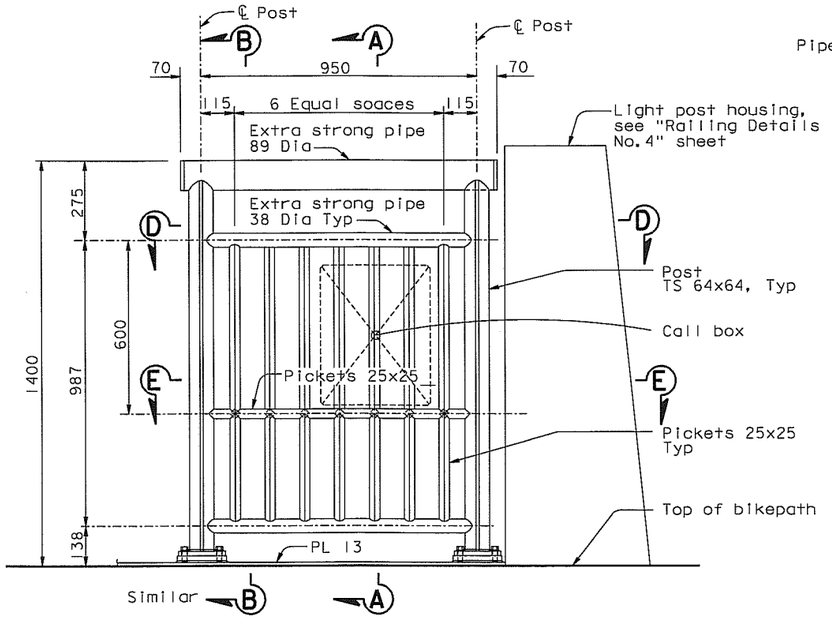

CALL BOX AT BELVEDERE ELEVATION

1:10

(Type D modified)

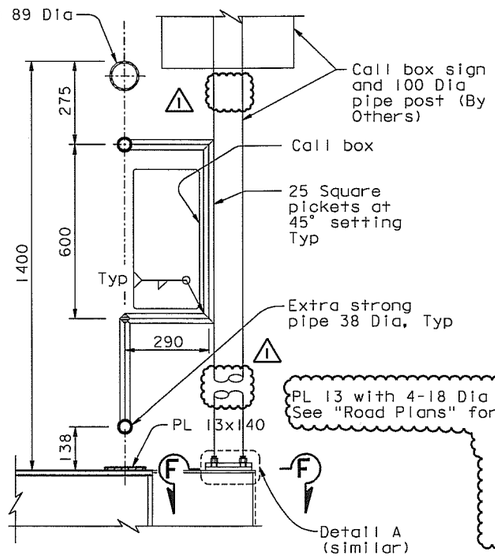

SECTION A-A

1:10

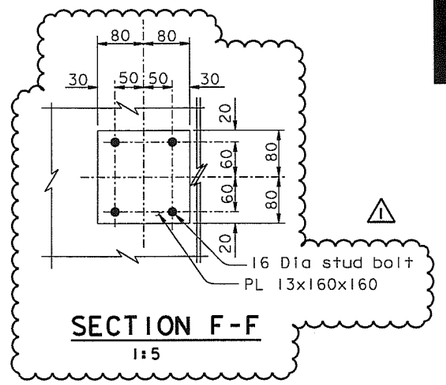

SECTION F-F

1:5

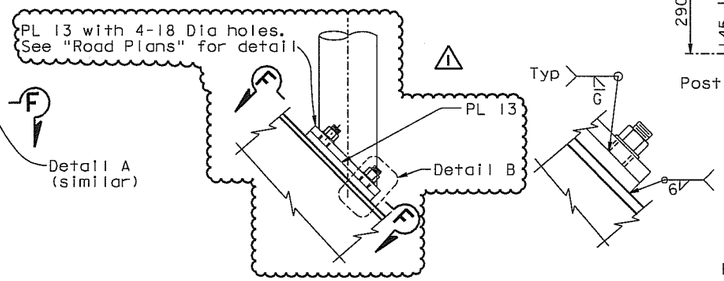

DETAIL A

1:5

DETAIL B

1:2.5

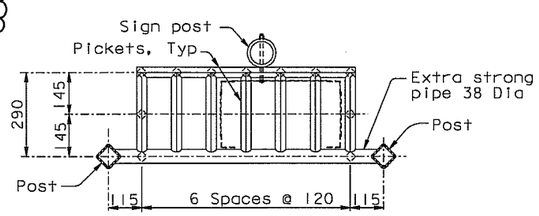

SECTION D-D

1:10

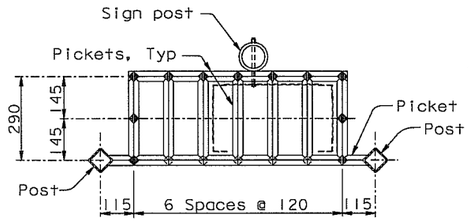

SECTION E-E

1:10

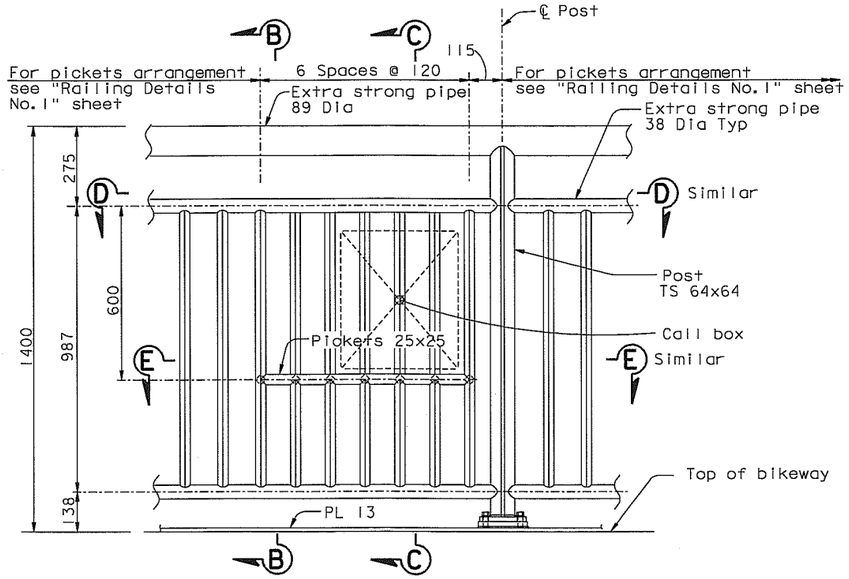

TYPICAL CALL BOX ELEVATION

1:10

(Type A modified)

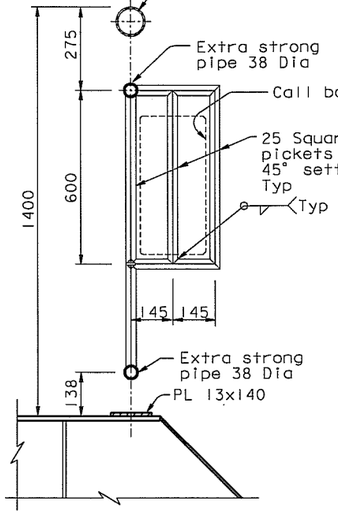

SECTION B-B

1:10

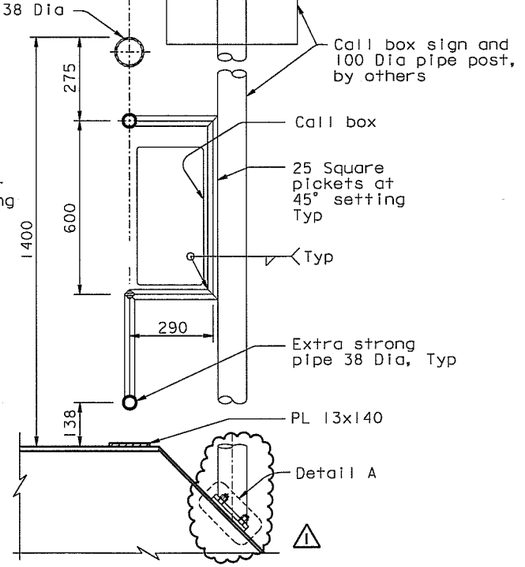

SECTION C-C

1:10

ALL DIMENSIONS ARE IN MILLIMETERS UNLESS OTHERWISE SHOWN

DIST.	COUNTY	ROUTE	KILOMETER POST TOTAL PROJECT	SHEET NO.	TOTAL SHEETS
04	SF	80	13.2/13.9	903R1	1204

REGISTERED PROFESSIONAL ENGINEER — Tien Hung Ho — No. C 43990 — Exp. 06/30/09 — CIVIL — STATE OF CALIFORNIA

REGISTERED ENGINEER - CIVIL

12-6-04

PLANS APPROVAL DATE

The State of California or its officers or agents shall not be responsible for the accuracy or completeness of electronic copies of this plan sheet.

T.Y. LIN / MOFFATT & NICHOL
825 BATTERY STREET
SAN FRANCISCO, CA 94111

To get to the web site, go to: http://www.dot.ca.gov

REQUESTS FOR INFORMATION NOT ADDRESSED IN THIS CCO REMAIN IN FORCE

MARK	DATE	DESCRIPTIONS	BY	CH'D	CCO#
		REVISIONS			
1	03/21/08	BARRIER MODIFICATIONS	TH	AS	44

CONTRACT CHANGE ORDER NO. ____
SHEET ___ OF ___

NOTES:

1. For layout, see "Railing Layout" sheets.
2. For details not shown, see "Railing Details" sheets.

R. Valizadeh/V. Toan/Y.L./W.L./F.C.
DESIGN OVERSIGHT
SIGN OFF DATE 03/21/08

	BY	CHECKED
DESIGN	T. Ho	C. Redfield
DETAILS	R. Xu	C. Redfield
QUANTITIES	G. Baker	K. Cormier

PREPARED FOR THE STATE OF CALIFORNIA DEPARTMENT OF TRANSPORTATION

R. Manzanarez
PROJECT ENGINEER

BRIDGE NO. 34-0006L/R
KILOMETER POST 13.2/13.9

CU 04
EA 0120F1

SAN FRANCISCO OAKLAND BAY BRIDGE
EAST SPAN SEISMIC SAFETY PROJECT
SELF-ANCHORED SUSPENSION BRIDGE
(SUPERSTRUCTURE & TOWER)

RAILING DETAILS NO. 6

Rev. Date: 5-18-98

ORIGINAL SCALE IN MILLIMETERS FOR REDUCED PLANS 0 10 20 30 40 50 60 70 80 90 100

DISREGARD PRINTS BEARING EARLIER REVISION DATES →

REVISION DATES (PRELIMINARY STAGE ONLY): 01/08/02 01/17/02 12/19/02

SHEET 486R1 OF

FILE => I:\bb\04-012001\sas\contract plans and cco\cco\in progress\cco#44\update 03-21-08\dgn\akrlg09.dgn

USERNAME => vigneravs DATE PLOTTED => 21 MAR 2008 TIME PLOTTED => 13:56:04

100 % PS&E

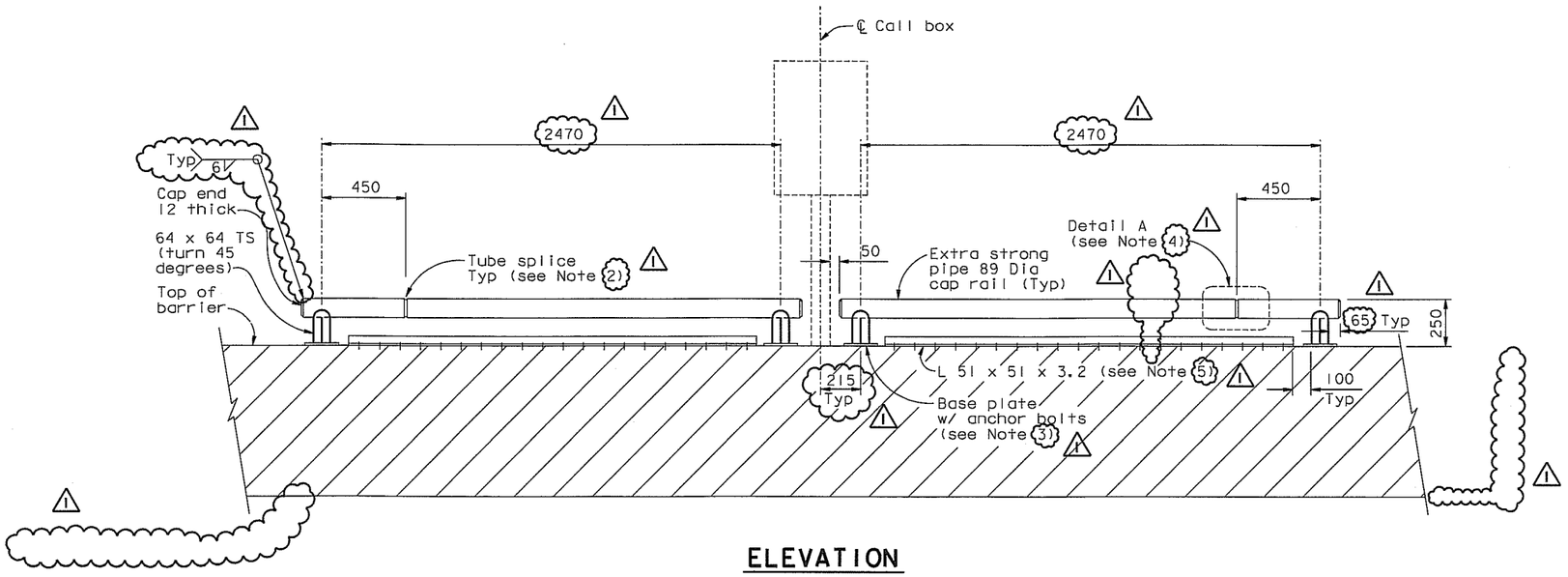

ELEVATION
1:15

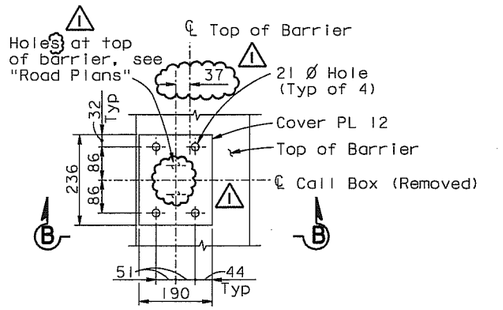

PLAN

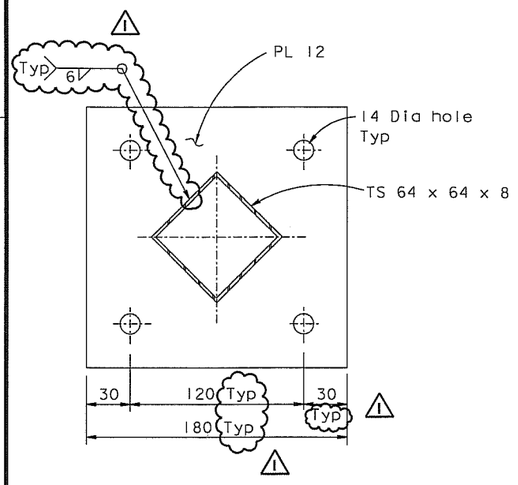

SECTION A-A
1:2

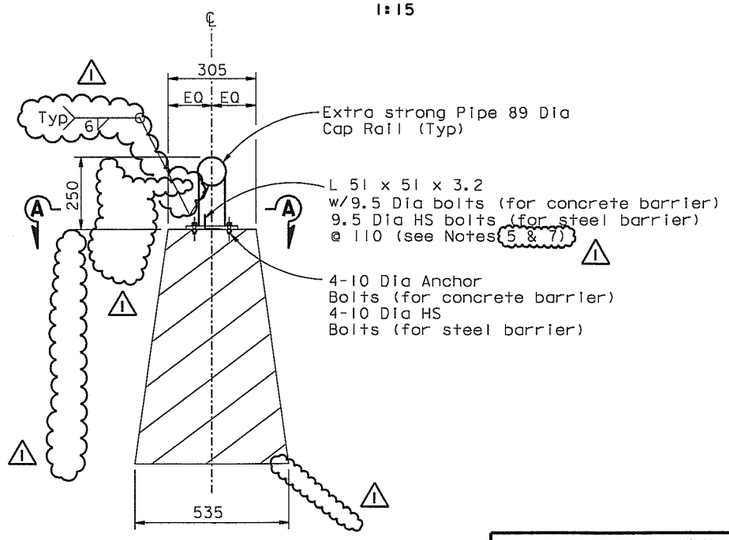

ELEVATION VIEW
1:10

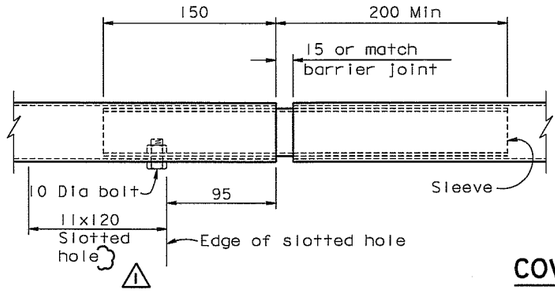

DETAIL A
1:2.5

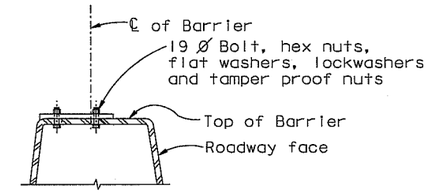

SECTION B-B

COVER PLATE AT REMOVED CALL BOX (STEEL BARRIER)
1:7.5

RAILING AT CALL BOX

NOTES:

1. The details in this sheet are intended for both SAS and Skyway structures. Use applicable details as required.
2. Tube splice may be located 450 mm away from either end of rail support.
3. A grout pad to level rail base plates shall be used for concrete barrier.
4. Tube splice required at steel barriers only.
5. Cut angle and provide a 15 mm gap at steel barrier joint.
6. For call box locations, see "Road Plans".
7. Adjust bolt spacing to miss the barrier diaphragm.

REQUESTS FOR INFORMATION NOT ADDRESSED IN THIS CCO REMAIN IN FORCE					
1	06/13/08	BARRIER MODIFICATIONS	TH	AS	44
0	10/31/07	BARRIER MODIFICATIONS	TH	AS	44
MARK	DATE	DESCRIPTIONS	BY	CH'D	CCO#
REVISIONS					

CONTRACT CHANGE ORDER NO. ____
SHEET ___ OF ___

ALL DIMENSIONS ARE IN MILLIMETERS UNLESS OTHERWISE SHOWN

Caltrans Metric

DIST.	COUNTY	ROUTE	KILOMETER POST TOTAL PROJECT	SHEET NO.	TOTAL SHEETS
04	SF	80	13.2/13.9	903SIR1	1204

REGISTERED ENGINEER - CIVIL
Tien Hung Ho No. C 43990 Exp. 6/30/09 CIVIL
10-31-07
PLANS APPROVAL DATE
The State of California or its officers or agents shall not be responsible for the accuracy or completeness of electronic copies of this plan sheet.

T.Y. LIN / MOFFATT & NICHOL
825 BATTERY STREET
SAN FRANCISCO, CA 94111

Caltrans now has a web site! To get to the web site, go to: http://www.dot.ca.gov

R. Valizadeh/V. Toan/Y.L./W.L./F.C.
DESIGN OVERSIGHT
SIGN OFF DATE 06/13/08

	BY	CHECKED
DESIGN	T. Ho	A. Sanjines
DETAILS	T. Ho	A. Sanjines
QUANTITIES	T. Ho	A. Sanjines

PREPARED FOR THE STATE OF CALIFORNIA DEPARTMENT OF TRANSPORTATION

R. Manzanarez
PROJECT ENGINEER

BRIDGE NO. 34-0006L/R
KILOMETER POST 13.2/13.9

SAN FRANCISCO OAKLAND BAY BRIDGE
EAST SPAN SEISMIC SAFETY PROJECT
SELF-ANCHORED SUSPENSION BRIDGE (SUPERSTRUCTURE & TOWER)
RAILING DETAILS NO. 6A

Rev. Date: 5-18-98

ORIGINAL SCALE IN MILLIMETERS FOR REDUCED PLANS 0 10 20 30 40 50 60 70 80 90 100

CU 04
EA 0120F1

DISREGARD PRINTS BEARING EARLIER REVISION DATES →
REVISION DATES (PRELIMINARY STAGE ONLY) 10/31/07
SHEET 486SIR1 OF

FILE => I:\bb\04-0120F1\sas\contract plans and cco\cco\In progress\cco#44\update 6-13-08\dgn\akrig10.dgn

100 % PS&E
DATE PLOTTED => 11 JUN 2008 TIME PLOTTED => 16:11:28
USERNAME => ptom

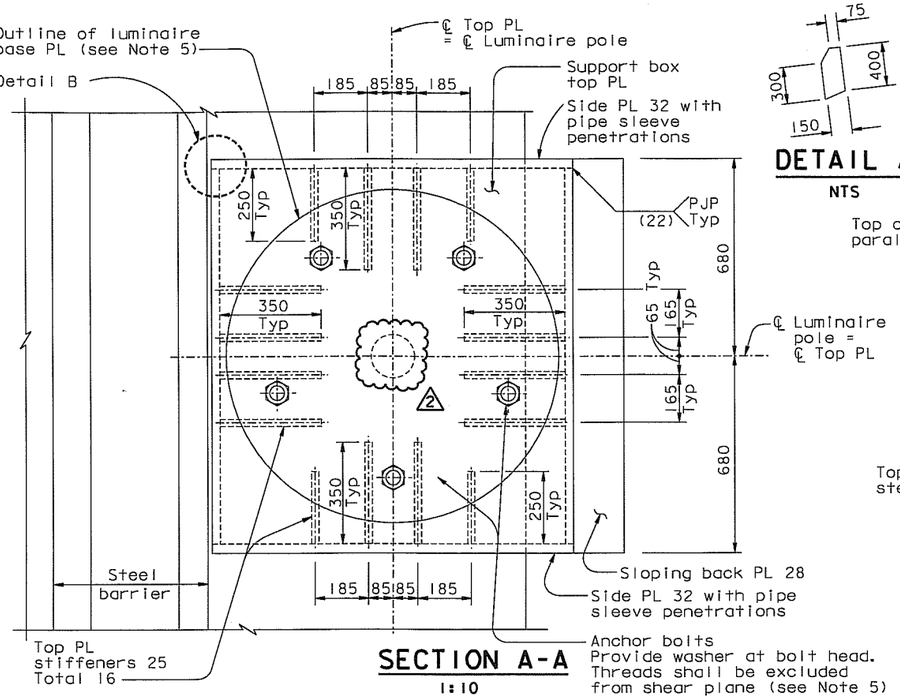

SECTION A-A
1:10

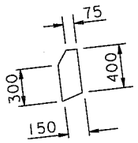

DETAIL A
NTS

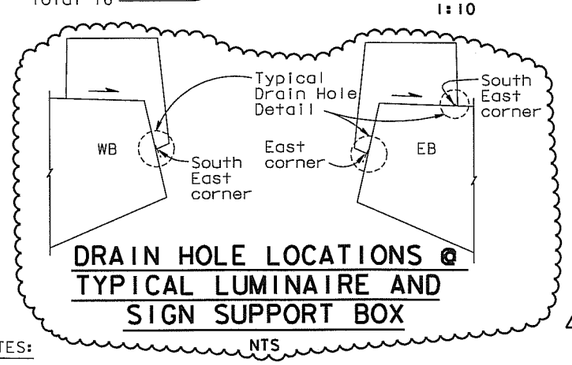

DRAIN HOLE LOCATIONS @ TYPICAL LUMINAIRE AND SIGN SUPPORT BOX
NTS

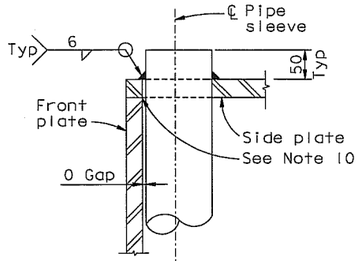

DETAIL B
1:5

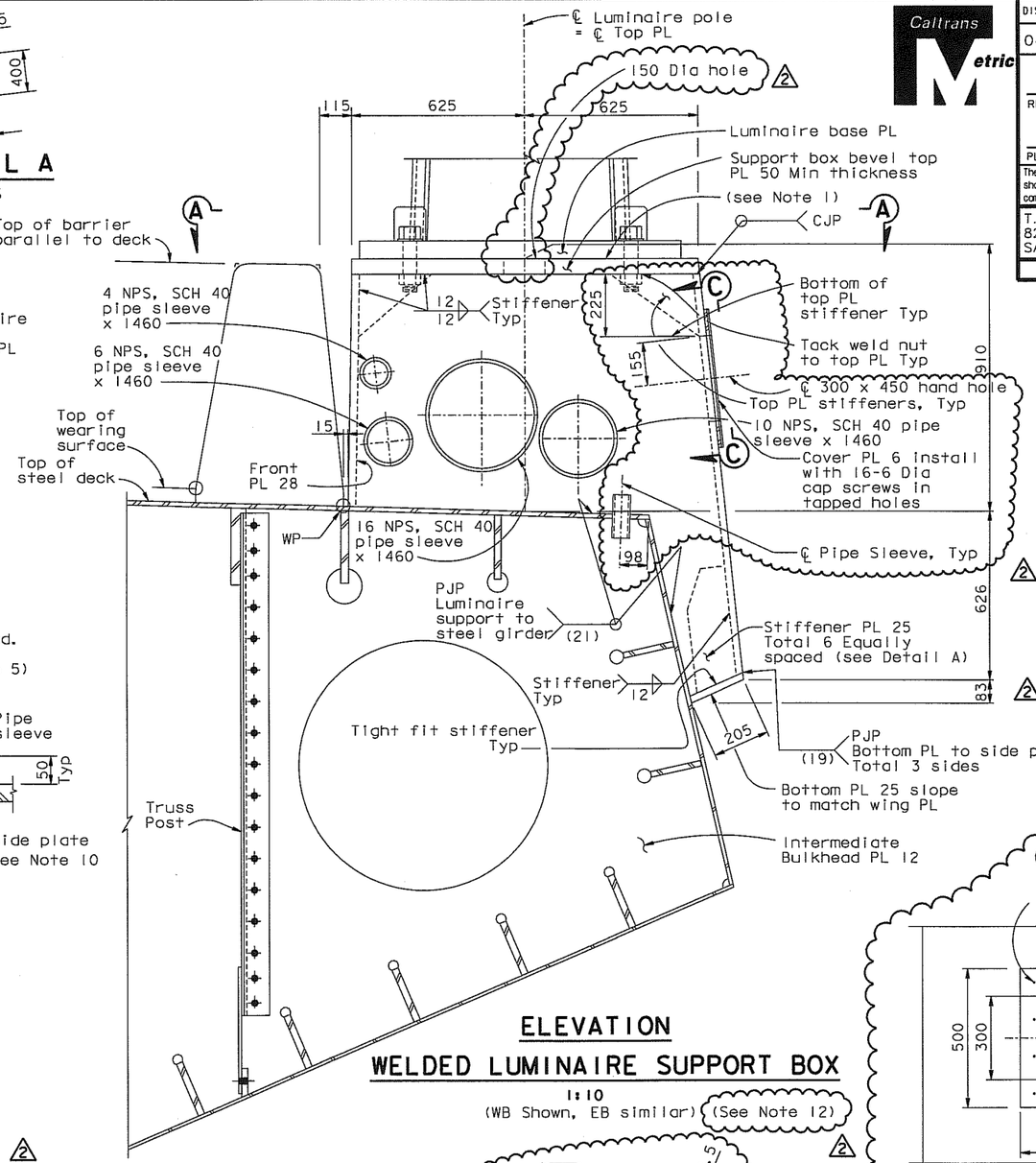

ELEVATION
WELDED LUMINAIRE SUPPORT BOX
1:10
(WB Shown, EB similar) (See Note 12)

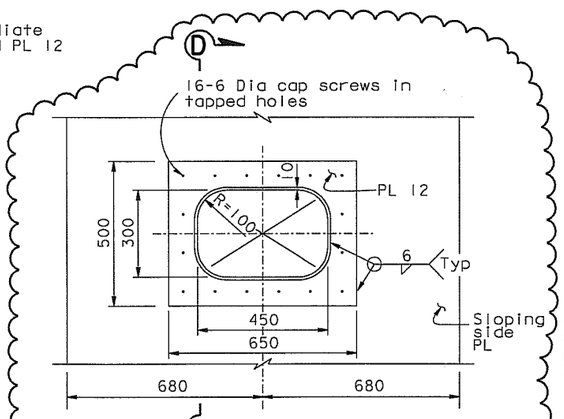

VIEW C-C
1:10

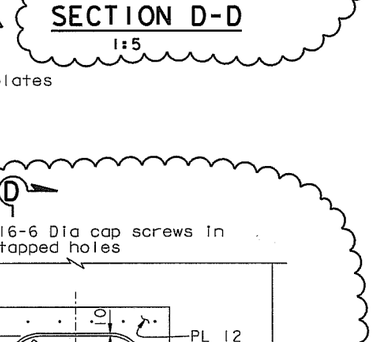

SECTION D-D
1:5

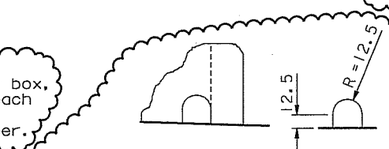

TYPICAL DRAIN HOLE DETAIL
1:2.5

NOTES:
1. Surfaces of plates shall be milled level to ensure bearing.
2. For location of pipe sleeves, see "Road Plans".
3. The Contractor shall submit for approval by the Engineer details of conduit penetration through deck plate. Conduit penetration details shall be completely sealed to ensure no water leakage into support box.
4. For Geometry of luminaire base plate, conduit openings and locations of bolts, see "Road Plans".
5. For details of utilities opening through luminaire support box, see "Road Plans".
6. Pipe sleeves shall be completely sealed at support box side plates to ensure no water leakage into support box.
7. For location of luminaire, see "Road Plans" sheets.
8. Pipe sleeves shall typically be concentric with the carried utility line. For utility locations, see the "Road Plans". For 4 NPS pipe sleeve, place the sleeve with 0 gap at the face of support box front plate, and aligned vertically on the utility line.
9. The side plates are normal to the deck.
10. Grind weld flush at pipe sleeve.
11. Pipe sleeve locations for pedestals @ PP 119 and sign post, see "Road Plans".
12. At locations where cable railing interferes with luminaire support box, terminate railing at eye bolts, each side of support box, subject to review and approval of the Engineer.

ALL DIMENSIONS ARE IN MILLIMETERS UNLESS OTHERWISE SHOWN

DIST.	COUNTY	ROUTE	KILOMETER POST TOTAL PROJECT	SHEET NO.	TOTAL SHEETS
04	SF	80	13.2/13.9	904R2	1204

REGISTERED ENGINEER - CIVIL
Tien Hung Ho No. C 43990 Exp. 06/30/09 CIVIL STATE OF CALIFORNIA
12-6-04
PLANS APPROVAL DATE
The State of California or its officers or agents shall not be responsible for the accuracy or completeness of electronic copies of this plan sheet.

T.Y. LIN / MOFFATT & NICHOL
825 BATTERY STREET
SAN FRANCISCO, CA 94111

To get to the web site, go to: http://www.dot.ca.gov

REQUESTS FOR INFORMATION NOT ADDRESSED IN THIS CCO REMAIN IN FORCE

MARK	DATE	REVISIONS	BY	CH'D	CCO#
2	06/13/08	BARRIER MODIFICATIONS	GB	TH	44
1	08/24/07	BARRIER MODIFICATIONS	GB	TH	44

CONTRACT CHANGE ORDER NO. ____
SHEET ___ OF ___

R. Valizadeh/V. Toan/Y.L./W.L./F.C.
DESIGN OVERSIGHT
SIGN OFF DATE 06/13/08
Rev. Date: 5-18-98

	BY	CHECKED
DESIGN	T. Ho	C. Redfield
DETAILS	R. Xu	C. Redfield
QUANTITIES	C. Mauch	K. Cormier

ORIGINAL SCALE IN MILLIMETERS FOR REDUCED PLANS 0 10 20 30 40 50 60 70 80 90 100

PREPARED FOR THE STATE OF CALIFORNIA DEPARTMENT OF TRANSPORTATION

CU 04
EA 0120F1

R. Manzanarez
PROJECT ENGINEER

BRIDGE NO. 34-0006L/R
KILOMETER POST 13.2/13.9

SAN FRANCISCO OAKLAND BAY BRIDGE
EAST SPAN SEISMIC SAFETY PROJECT
SELF-ANCHORED SUSPENSION BRIDGE
(SUPERSTRUCTURE & TOWER)

LUMINAIRE SUPPORT DETAILS NO. 1

DISREGARD PRINTS BEARING EARLIER REVISION DATES
REVISION DATES (PRELIMINARY STAGE ONLY): 05/31/01 | 04/09/02 | 07/01/02 | 12/13/02 | 11/13/05
SHEET 487R2 OF

FILE => I:\bb\04-0120F1\sas\contract plans and cco\cco\in progress\cco#44\update 6-13-08\dgn\akiht08.dgn

USERNAME => ptom
DATE PLOTTED => 11 JUN 2008 TIME PLOTTED => 16:12:28
100 % PS&E

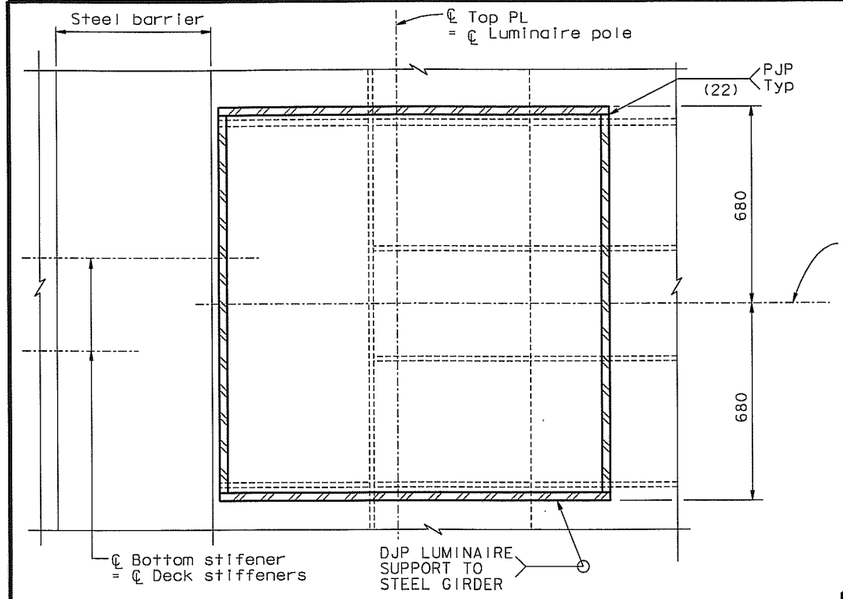

SECTION B-B
1:10

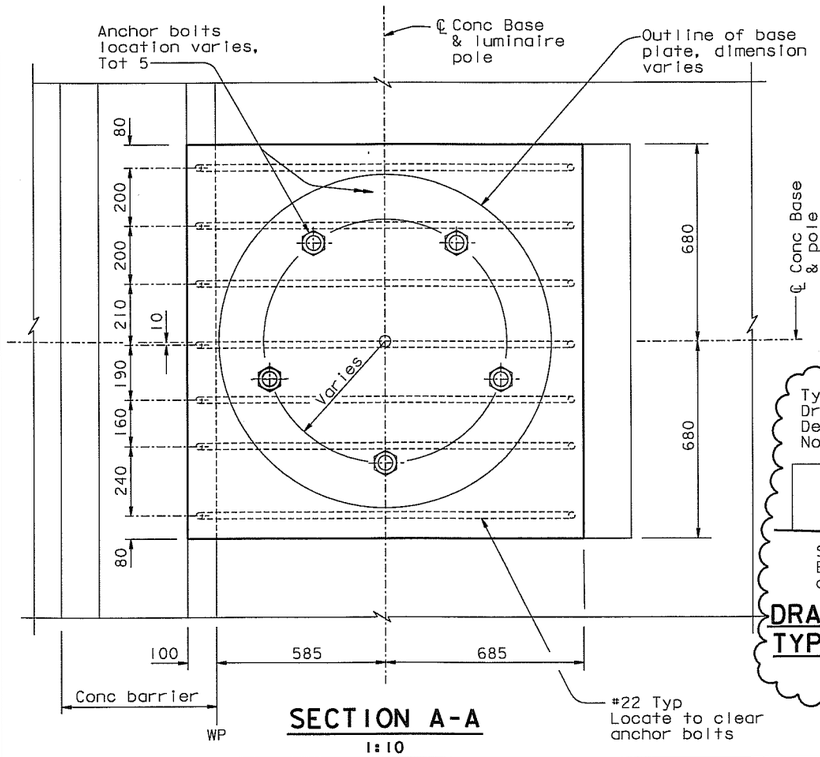

SECTION A-A
1:10

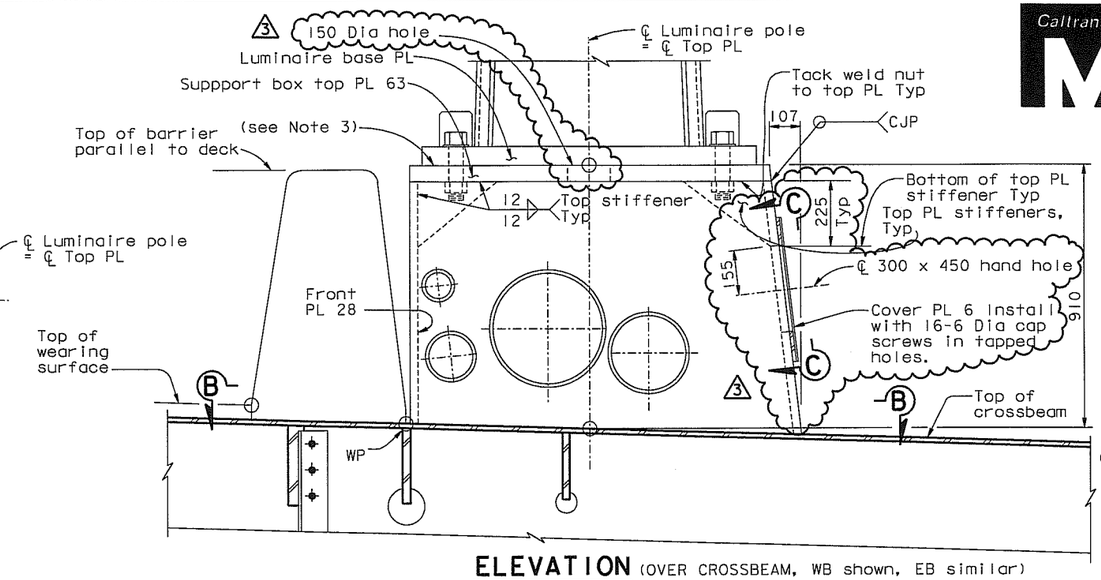

ELEVATION (OVER CROSSBEAM, WB shown, EB similar)

WELDED LUMINAIRE SUPPORT BOX
1:10

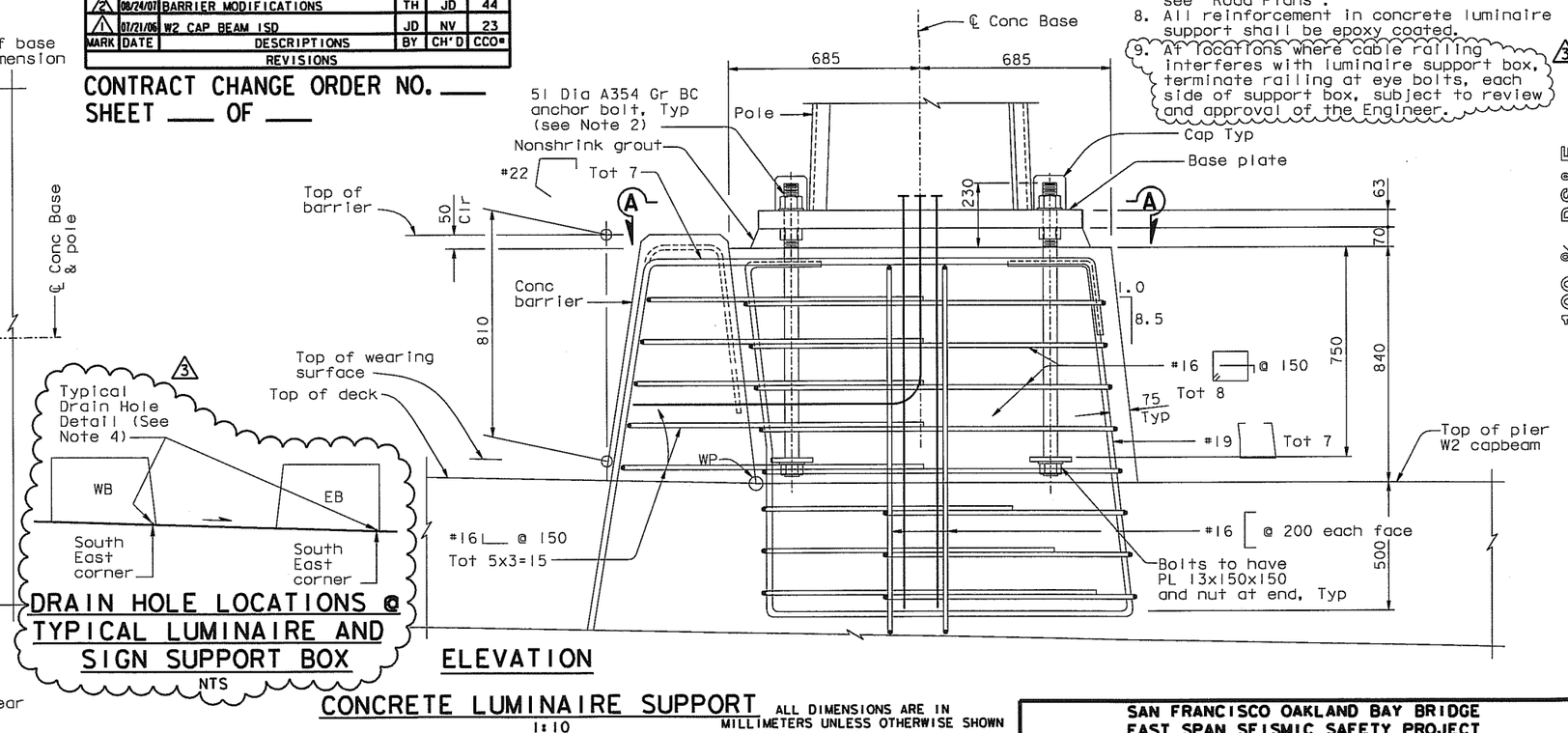

ELEVATION

DRAIN HOLE LOCATIONS @ TYPICAL LUMINAIRE AND SIGN SUPPORT BOX
NTS

CONCRETE LUMINAIRE SUPPORT
1:10

ALL DIMENSIONS ARE IN MILLIMETERS UNLESS OTHERWISE SHOWN

NOTES:

1. For dimensions and details not shown, see "Luminaire Support Details No. 1" sheet.
2. Anchor rods at the base PL connection shall be tensioned to 0.5Fy.
3. Surfaces of plates shall be milled level to ensure bearing.
4. For View C-C and Typical Drain Hole Detail, see "Luminaire Support Details No. 1" sheet. (3)
5. The Contractor shall submit for approval by the Engineer details of conduit penetration through deck plate. Conduit penetration details shall be completely sealed to ensure no water leakage into support box.
6. For location of luminaire, see "Road Plans" sheets.
7. For geometry of luminaire base plate, conduit openings and location of bolts, see "Road Plans".
8. All reinforcement in concrete luminaire support shall be epoxy coated.
9. At locations where cable railing interferes with luminaire support box, terminate railing at eye bolts, each side of support box, subject to review and approval of the Engineer. (3)

REQUESTS FOR INFORMATION NOT ADDRESSED IN THIS CCO REMAIN IN FORCE					
MARK	DATE	REVISIONS DESCRIPTIONS	BY	CH'D	CCO#
3	06/13/08	BARRIER MODIFICATIONS	TH	JD	44
2	08/24/07	BARRIER MODIFICATIONS	TH	JD	44
1	07/21/06	W2 CAP BEAM ISD	JD	NV	23

CONTRACT CHANGE ORDER NO. ___
SHEET ___ OF ___

DIST.	COUNTY	ROUTE	KILOMETER POST TOTAL PROJECT	SHEET NO.	TOTAL SHEETS
04	SF	80	13.2/13.9	905R3	1204

REGISTERED ENGINEER - CIVIL
Tien Hung Ho
No. C 43990
Exp. 06/30/09
CIVIL
STATE OF CALIFORNIA
12-6-04
PLANS APPROVAL DATE

The State of California or its officers or agents shall not be responsible for the accuracy or completeness of electronic copies of this plan sheet.

T.Y. LIN / MOFFATT & NICHOL
825 BATTERY STREET
SAN FRANCISCO, CA 94111

Caltrans now has a web site! To get to the web site, go to: http://www.dot.ca.gov

R. Valizadeh/V. Toan/Y.L./W.L./F.C.
DESIGN OVERSIGHT
SIGN OFF DATE 06/13/08

	BY	CHECKED
DESIGN	T. Ho	C. Redfield
DETAILS	R. Xu	C. Redfield
QUANTITIES	C. Mauch	K. Cormier

PREPARED FOR THE STATE OF CALIFORNIA
DEPARTMENT OF TRANSPORTATION

R. Manzanarez
PROJECT ENGINEER

BRIDGE NO. 34-0006L/R
KILOMETER POST 13.2/13.9

CU 04
EA 0120F1

SAN FRANCISCO OAKLAND BAY BRIDGE
EAST SPAN SEISMIC SAFETY PROJECT
SELF-ANCHORED SUSPENSION BRIDGE
(SUPERSTRUCTURE & TOWER)

LUMINAIRE SUPPORT DETAILS NO. 2

DISREGARD PRINTS BEARING EARLIER REVISION DATES
REVISION DATES (PRELIMINARY STAGE ONLY): 05/31/01 | 09/06/02 | 07/30/02 | 12/19/02 | 11/13/05
SHEET 488R3 OF

Rev. Date: 5-18-98

ORIGINAL SCALE IN MILLIMETERS FOR REDUCED PLANS 0 10 20 30 40 50 60 70 80 90 100

FILE => I:\bb\04-012001\sas\contract plans and cco\cco\in progress\cco#44\update 6-13-08\dgn\oklht08a.dgn

100% PS&E
DATE PLOTTED => 11 JUN 2008 TIME PLOTTED => 16:13:12
USERNAME => ptom

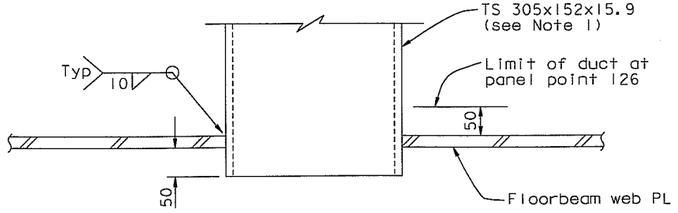

TYPICAL UTILITY DUCT DETAIL AT PIER E2 AND PANEL POINT 126

1:5

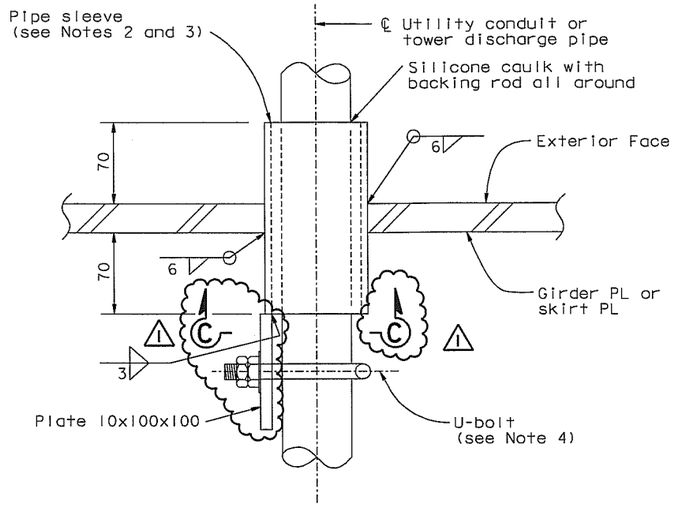

TYPICAL UTILITY CONDUIT AND TOWER DISCHARGE PIPE PENETRATION DETAIL

1:2.5

PIPE SLEEVE TABLE

Conduit Nominal size	Pipe sleeve Nominal size	Minimum Spacing (See Note 8)
27	51	150
41	64	200
53	76	250
63	89	300
78	102	500
91	127	1000
103	127	1000

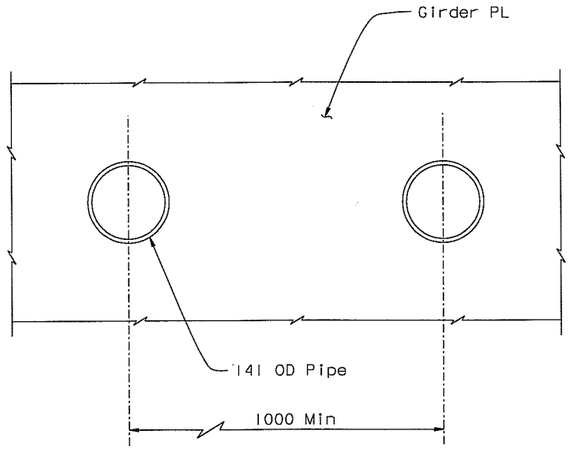

TYPICAL UTILITY CABLE PENETRATION DETAIL

1:5

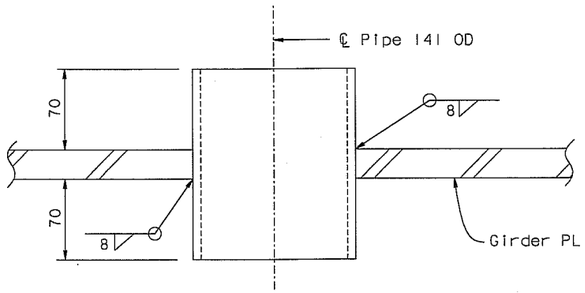

SECTION B-B (see Note 5)

1:2.5

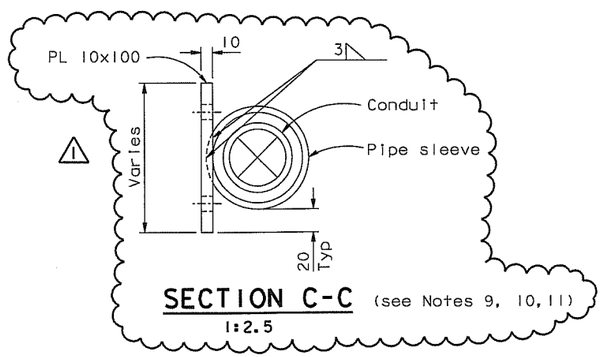

SECTION C-C (see Notes 9, 10, 11)

1:2.5

NOTES:

1. TS 305x152 at Pier E2 shall extend through all three webs of floorbeam E2.
2. All pipe sleeves shall be A53 GR B or an equivalent steel grade as approved by the Engineer and shall be detailed to accommodate actual utility conduit and pipe sizes. For utility conduit, pipe and cable sizes, see "Road Plans". For tower discharge pipe, see "Tower Drainage Details No.1" sheet.
3. For pipe sleeves sizes, see "Pipe Sleeve Table". Contractor shall be responsible for fit-up, support and sealing of pipes and conduits in the pipe sleeves. Contractor may select alternative pipe sleeve sizes to suit the actual conduits and pipes installed.
4. For conduit mounting details, see "Road Plans".
5. For mounting and sealing cables in pipe sleeves, see "Road Plans".
6. For conduit penetrations at panel point 41, see "Girder Transition Near Tower" sheets.
7. For conduit penetrations at utility platforms, see Typical Crossbeams Details" sheets.
8. Unless otherwise noted or approved by the Enginner pipe sleeves may not be located in the unreinfoced girder skin plates at less than the minimum spacing.
9. 10 mm plate welded to pipe sleeve to vary in width depending on O.D. of pipe.
10. Dimension and size of holes in plate depend on U-bolt size.
11. Edge of plate to align with inside edge of pipe sleeve.

REQUESTS FOR INFORMATION NOT ADDRESSED IN THIS CCO REMAIN IN FORCE					
1	05/06/08	BARRIER MODIFICATIONS	DT	AS	44
MARK	DATE	DESCRIPTIONS	BY	CH'D	CCO#
REVISIONS					

CONTRACT CHANGE ORDER NO. ____
SHEET ___ OF ___

Daniel J. Turner
REGISTERED PROFESSIONAL ENGINEER
No. C 65033
Exp. 06/30/09
CIVIL
STATE OF CALIFORNIA

FOR REVISIONS ONLY

ALL DIMENSIONS ARE IN MILLIMETERS UNLESS OTHERWISE SHOWN

DIST.	COUNTY	ROUTE	KILOMETER POST TOTAL PROJECT	SHEET NO.	TOTAL SHEETS
04	SF	80	13.2/13.9	965R1	1204

Caltrans Metric

George Baker
REGISTERED ENGINEER - CIVIL
1-27-03
PLANS APPROVAL DATE

REGISTERED PROFESSIONAL ENGINEER
George S. Baker
No. C57112
Exp. 12/31/05
CIVIL
STATE OF CALIFORNIA

The State of California or its officers or agents shall not be responsible for the accuracy or completeness of electronic copies of this plan sheet.

T.Y. LIN / MOFFATT & NICHOL
825 BATTERY STREET
SAN FRANCISCO, CA 94111

To get to the web site, go to: http://www.dot.ca.gov

R. Valizadeh/V. Toan/Y.L./W.L./F.C.
DESIGN OVERSIGHT
Reza Valizadeh / Vang Toan / Y. Liu
SIGN OFF DATE 05/06/08

Rev. Date: 5-18-98

	BY	CHECKED
DESIGN	G. Baker	T. Ho
DETAILS	S. Camo	T. Ho
QUANTITIES	C. Mauch	D. Harrison

PREPARED FOR THE STATE OF CALIFORNIA
DEPARTMENT OF TRANSPORTATION

R. Manzanarez
PROJECT ENGINEER

BRIDGE NO. 34-0006L/R
KILOMETER POST 13.2/13.9

CU 04
EA 0120F1

ORIGINAL SCALE IN MILLIMETERS FOR REDUCED PLANS 0 10 20 30 40 50 60 70 80 90 100

DISREGARD PRINTS BEARING EARLIER REVISION DATES

REVISION DATES (PRELIMINARY STAGE ONLY)										SHEET	OF
08/06/99	05/17/01	04/08/02	07/01/02	12/19/02						548R1	

SAN FRANCISCO OAKLAND BAY BRIDGE
EAST SPAN SEISMIC SAFETY PROJECT
SELF-ANCHORED SUSPENSION BRIDGE
(SUPERSTRUCTURE & TOWER)

UTILITY DETAILS NO. 1

FILE => I:\bb\04-012001\sas\contract plans and cco\cco\In progress\cco#44\update 05-06-08\dgn\cakmsc13.dgn

100 % PS&E
DATE PLOTTED => 07 MAY 2008 TIME PLOTTED => 08:34:48
USERNAME => ptam

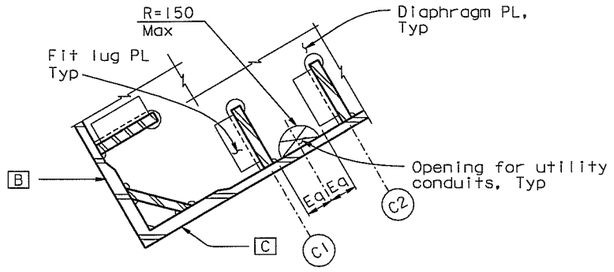

TYPICAL
1:20

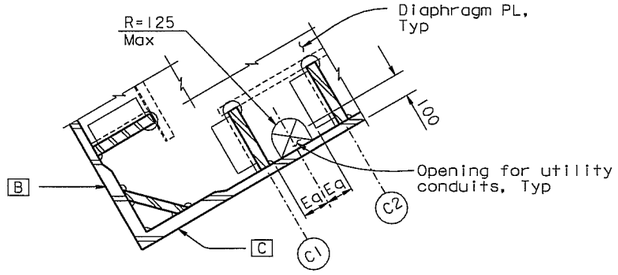

AT DIAPHRAGM TYPE 2C ONLY
1:20

DIAPHRAGM COPE DETAIL FOR UTILITY CONDUITS

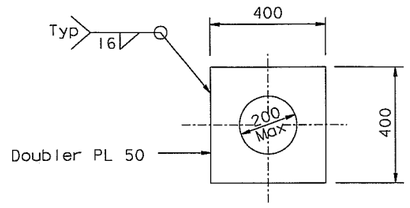

FOR DEHUMIDIFICATION CONDUITS (see Note 3)
1:10

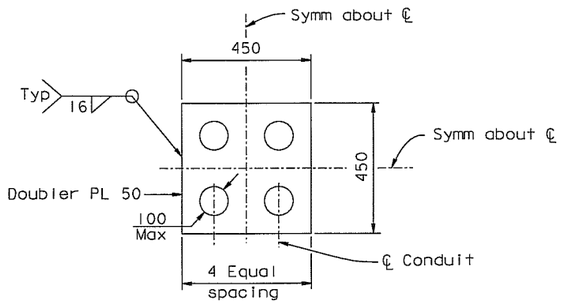

FOR ELECTRIC CONDUITS (see Note 1)
1:10

HOLE STIFFENING DETAIL FOR UTILITY CONDUITS

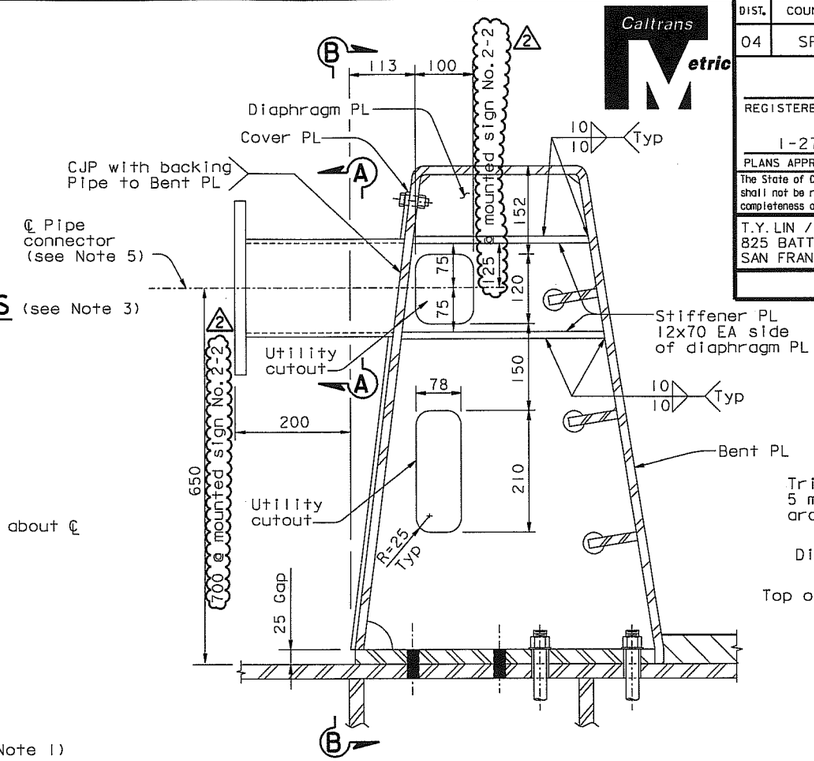

PIPE CONNECTOR FOR SIGN ON BARRIER
1:5

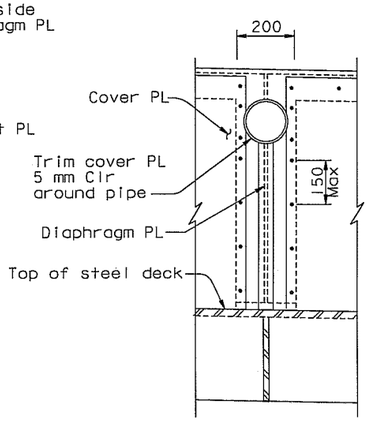

SECTION B-B
1:10

LEGEND:

(C1) Tower longitudinal stiffener designation (see Note 4)

NOTES:

1. Drill holes (100 Dia Max) as required up to 4 maximum. Seal around conduits with silicone caulk with backing rods.
2. For utility layout and details, see "Road Plans".
3. Drill hole and seal to conduits as required for dehumidification conduits. For other duct penetrations, see similar "Duct Opening Detail" on "Dehumidification Support Details No.5" sheet.
4. For tower longitudinal stiffener locations, see "Tower Shaft Details" sheets.
5. Pipe connector must line up with barrier diaphragm. Sign location shall be moved to the nearest diaphragm. See "Barrier Details" sheets for barrier details. See Road Plans for sign details.
6. For mounting screw and openings in mounting PL see "Road Plans."
7. For conduit and box support details, see "Road Plans".

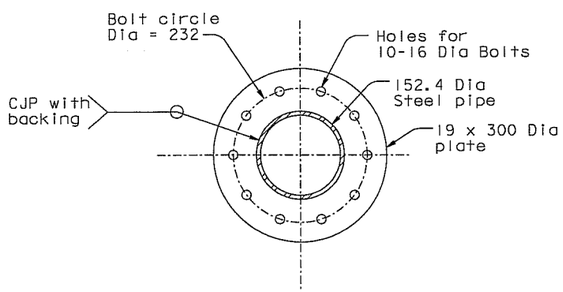

SECTION A-A
1:5

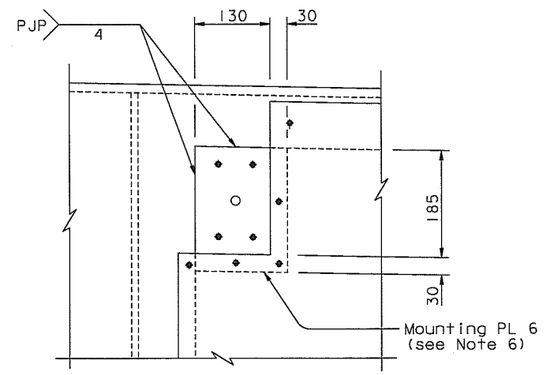

RECEPTACLE MOUNTING
1:5

REQUESTS FOR INFORMATION NOT ADDRESSED IN THIS CCO REMAIN IN FORCE					
2	04/18/08	BARRIER MODIFICATIONS	AS	MN	44
1	08/24/07	BARRIER MODIFICATIONS	GB	MN	44
MARK	DATE	DESCRIPTIONS	BY	CH'D	CCO#
REVISIONS					

CONTRACT CHANGE ORDER NO. ____
SHEET ____ OF ____

DIST.	COUNTY	ROUTE	KILOMETER POST TOTAL PROJECT	SHEET NO.	TOTAL SHEETS
04	SF	80	13.2/13.9	966R2	1204

REGISTERED ENGINEER - CIVIL
Marwan N. Nader
No. C 054426
Exp. 12/31/09
CIVIL
STATE OF CALIFORNIA
1-27-03
PLANS APPROVAL DATE
The State of California or its officers or agents shall not be responsible for the accuracy or completeness of electronic copies of this plan sheet.

T.Y. LIN / MOFFATT & NICHOL
825 BATTERY STREET
SAN FRANCISCO, CA 94111

To get to the web site, go to: http://www.dot.ca.gov

ALL DIMENSIONS ARE IN MILLIMETERS UNLESS OTHERWISE SHOWN

SAN FRANCISCO OAKLAND BAY BRIDGE
EAST SPAN SEISMIC SAFETY PROJECT
SELF-ANCHORED SUSPENSION BRIDGE
(SUPERSTRUCTURE & TOWER)

UTILITY DETAILS NO. 2

R. Valizadeh/V. Toan/Y.L./W.L./F.C.
DESIGN OVERSIGHT
SIGN OFF DATE 04/18/08

	BY	CHECKED
DESIGN	M. Nader	T. Ho
DETAILS	L. Rus	T. Ho
QUANTITIES	L. Rus	D. Harrison

PREPARED FOR THE STATE OF CALIFORNIA DEPARTMENT OF TRANSPORTATION

R. Manzanarez
PROJECT ENGINEER

BRIDGE NO. 34-0006L/R
KILOMETER POST 13.2/13.9

CU 04
EA 0120F1

DISREGARD PRINTS BEARING EARLIER REVISION DATES →
REVISION DATES (PRELIMINARY STAGE ONLY): 04/09/02 07/01/02 12/19/02 11/13/05

SHEET 549R2 OF

Rev. Date: 5-18-98

ORIGINAL SCALE IN MILLIMETERS FOR REDUCED PLANS 0 10 20 30 40 50 60 70 80 90 100

FILE => L:\BB\04-012001\SAS\Contract Plans and CCO\CCO\In Progress\CCO#44\Update 04-18-08\DGN\akmsc14.dgn

USERNAME => vlgnatovs DATE PLOTTED => 18 APR 2008 TIME PLOTTED => 100 % PS&E