DIST.	COUNTY	ROUTE	KILOMETER POST TOTAL PROJECT	SHEET NO.	TOTAL SHEETS
04	SF	80	13.2/13.9	890SIRI	1204

REGISTERED ENGINEER - CIVIL

01-20-10
PLANS APPROVAL DATE

REGISTERED PROFESSIONAL ENGINEER Tien Hung Ho No. C 43990 Exp. 06/30/11 CIVIL STATE OF CALIFORNIA

The State of California or its officers or agents shall not be responsible for the accuracy or completeness of electronic copies of this plan sheet.

T.Y. LIN / MOFFATT & NICHOL
825 BATTERY STREET
SAN FRANCISCO, CA 94111

Caltrans now has a web site! To get to the web site, go to: http://www.dot.ca.gov

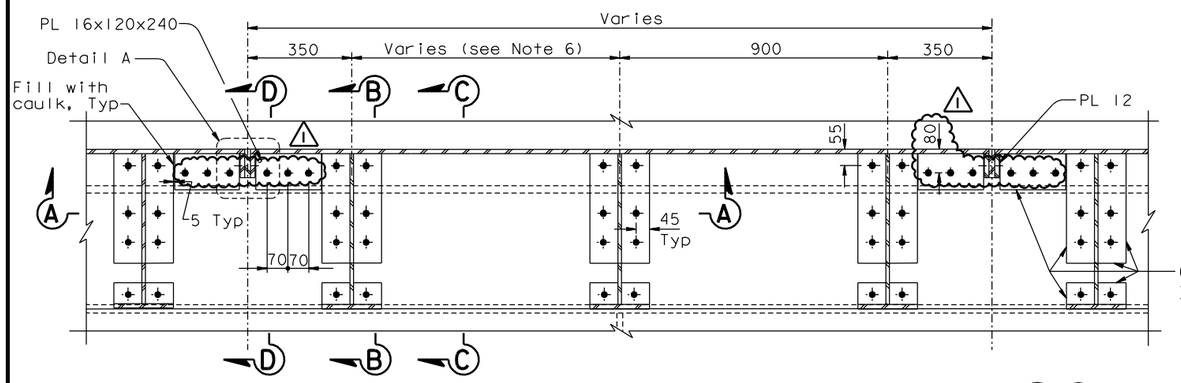

PLAN-ALTERNATE STEEL BARRIER Type 732 Modified for (W2) (E5)

1:10

6. Barrier length and diaphragm spacing varies west of PP 9 and from PP 118 to Hinge A. See Detail D on "Girder At Pier W2 No. 3" sheet. and "Girder Framing Plan No. 4" sheet.
7. For call box penetrations and locations see "Road Plans".
8. Cut line for cover PLs located 3300 west of panel points listed under Type 1 in "Drainage Type Location Table" on "Deck Drainage Detail No. 3" sheet.
9. For details not shown, see "Barrier Details No. 1" sheet.
10. For 22 Dia bolts, use 24 Dia holes in steel deck plates and 27 Dia holes in barrier base plate.

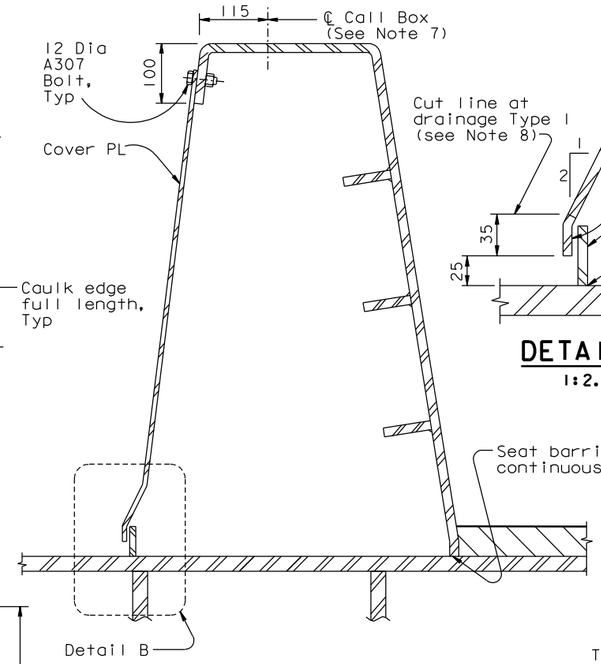

SECTION C-C

1:5

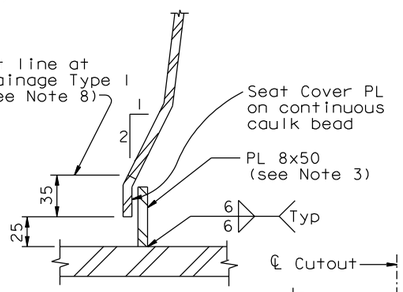

DETAIL B

1:2.5

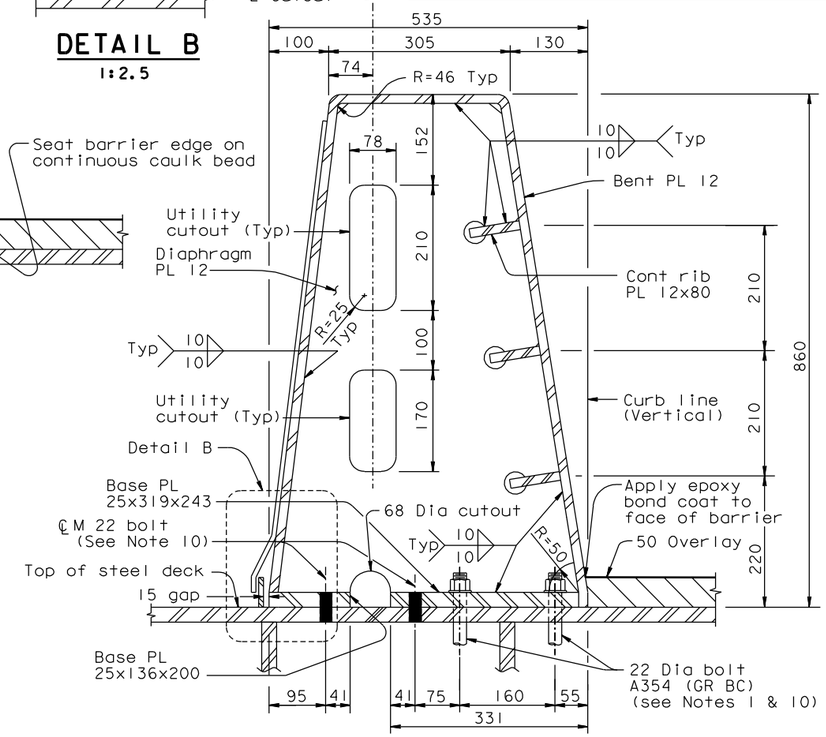

SECTION B-B

1:5

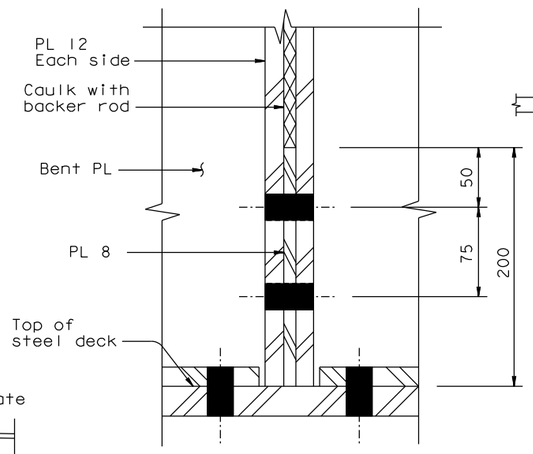

SECTION E-E

1:2.5

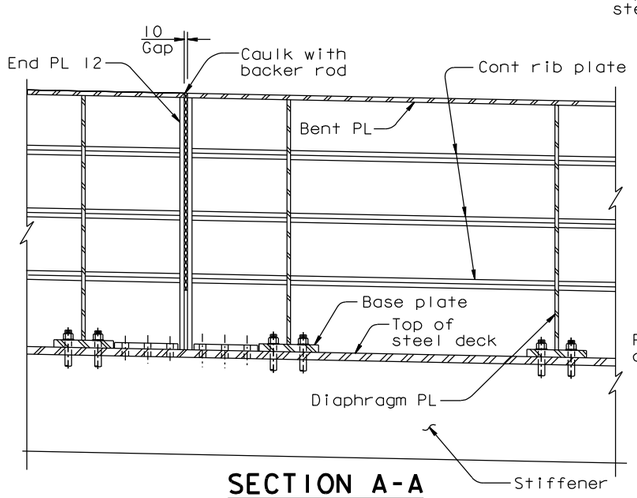

SECTION A-A

1:10

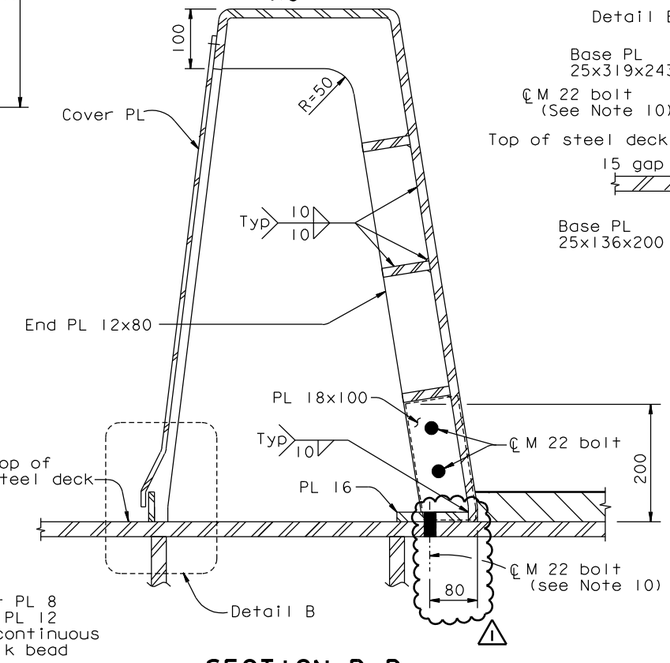

SECTION D-D

1:5

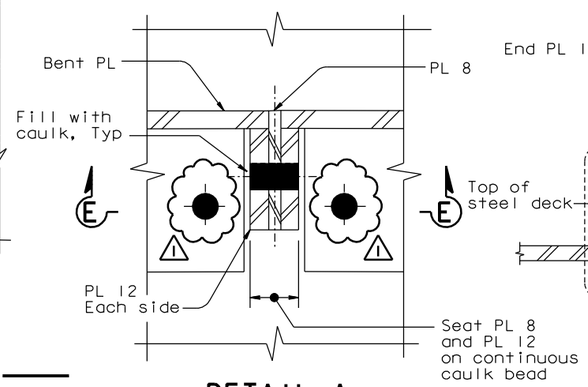

DETAIL A

1:2.5

NOTES:

1. For steel barrier to box girder connection details, see "Typical Girder Details" and "Barrier Details No. 1" sheets.
2. Inlets and flume plates exist on south barrier of each deck only.
3. For locations of drainage features, see "Deck Drainage Details No. 2" sheet. Slot cover over Diverter plate where shown on "Deck Drainage Details No. 1" sheet.
4. For conduit penetration thru deck and beveled plate detail, see "Utility Detail" sheets.
5. For utilities inside barrier support details, conduit and box, see "Road Plans".

CONTRACT CHANGE ORDER NO. ____
SHEET ___ OF ___

REQUESTS FOR INFORMATION NOT ADDRESSED IN THIS CCO REMAIN IN FORCE

ALL DIMENSIONS ARE IN MILLIMETERS UNLESS OTHERWISE SHOWN

R. Valizadeh/V. Toan/Y.L./W.L./F.C.
DESIGN OVERSIGHT
SIGN OFF DATE 01/29/10

MARK	DATE	DESCRIPTIONS	BY	CH'D	CCO#
1	01/29/10	BARRIER MODIFICATIONS	TH	GB	44
0	01/20/10	BARRIER MODIFICATIONS	TH	GB	44

REVISIONS

	BY	CHECKED
DESIGN	T. Ho	G. Baker
DETAILS	T. Ho	G. Baker
QUANTITIES	T. Ho	G. Baker

PREPARED FOR THE STATE OF CALIFORNIA DEPARTMENT OF TRANSPORTATION

R. Manzanarez
PROJECT ENGINEER

BRIDGE NO. 34-0006L/R
KILOMETER POST 13.2/13.9

CU 04
EA 0120F1

SAN FRANCISCO OAKLAND BAY BRIDGE
EAST SPAN SEISMIC SAFETY PROJECT
SELF-ANCHORED SUSPENSION BRIDGE
(SUPERSTRUCTURE & TOWER)

BARRIER DETAILS NO. 2A

Rev. Date: 5-18-98

ORIGINAL SCALE IN MILLIMETERS FOR REDUCED PLANS 0 10 20 30 40 50 60 70 80 90 100

DISREGARD PRINTS BEARING EARLIER REVISION DATES 01/20/10

REVISION DATES (PRELIMINARY STAGE ONLY)

SHEET 473SIRI OF

FILE => I:\bb\04-012001\sas\contract plans and cco\cco\cco#44\14-revision 01-29-10\dgn\akbar03a.dgn

100% PS&E

DATE PLOTTED => 28 JAN 2010 TIME PLOTTED => 14:04:29

USERNAME => crivera