DIST.	COUNTY	ROUTE	KILOMETER POST TOTAL PROJECT	SHEET NO.	TOTAL SHEETS
04	SF	80	13.2/13.9	877R1	1204

Caltrans Metric

George Baker
REGISTERED ENGINEER - CIVIL

12-6-04
PLANS APPROVAL DATE

REGISTERED PROFESSIONAL ENGINEER George S. Baker No. C57112 Exp. 12/31/05 CIVIL STATE OF CALIFORNIA

The State of California or its officers or agents shall not be responsible for the accuracy or completeness of electronic copies of this plan sheet.

REGISTERED PROFESSIONAL ENGINEER Daniel J. Turner No. C 65033 Exp. 06/30/09 CIVIL STATE OF CALIFORNIA

FOR REVISIONS ONLY

T.Y. LIN / MOFFATT & NICHOL
825 BATTERY STREET
SAN FRANCISCO, CA 94111

Caltrans now has a web site! To get to the web site, go to: http://www.dot.ca.gov

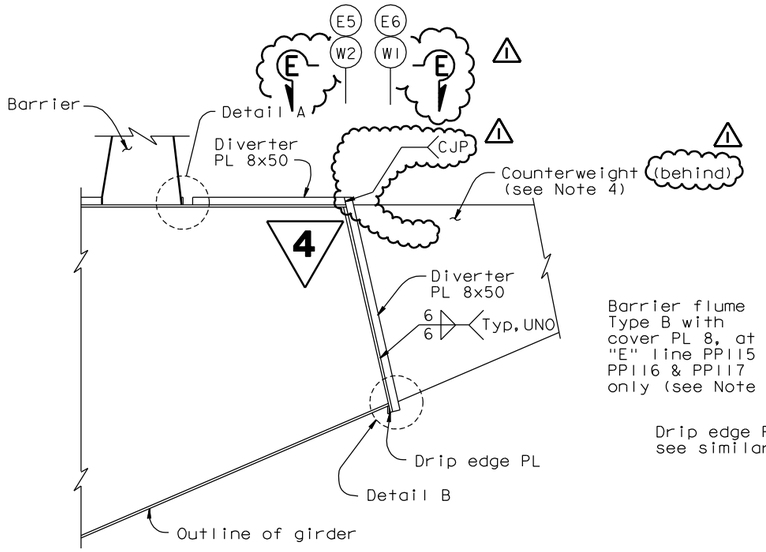

SECTION A-A
1:20

(SECTION A'-A' SIMILAR) (see Note 6)

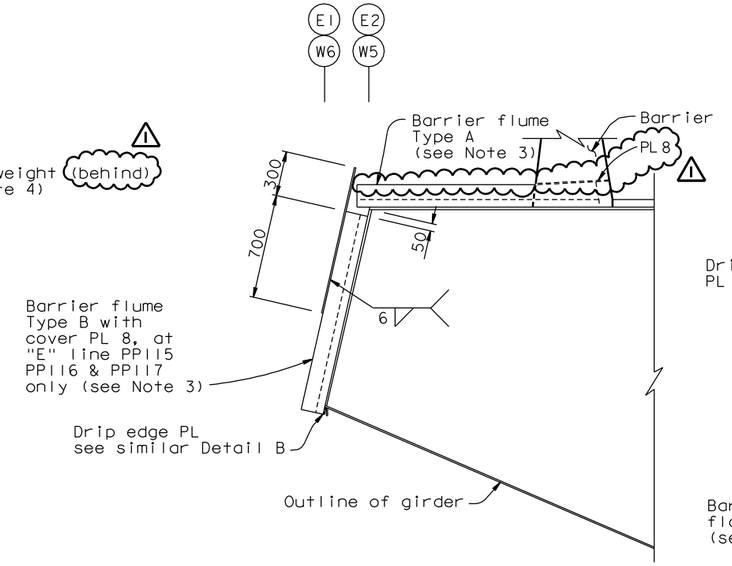

SECTION B-B
1:20

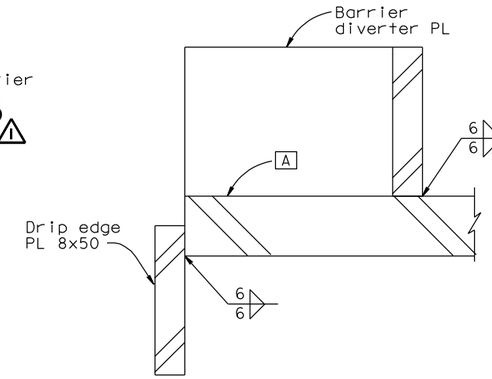

SECTION C-C
1:1

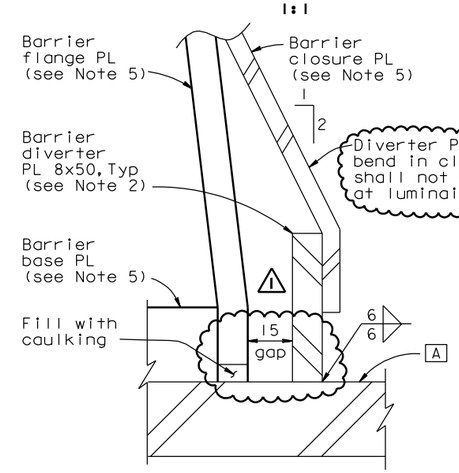

DETAIL A
1:1

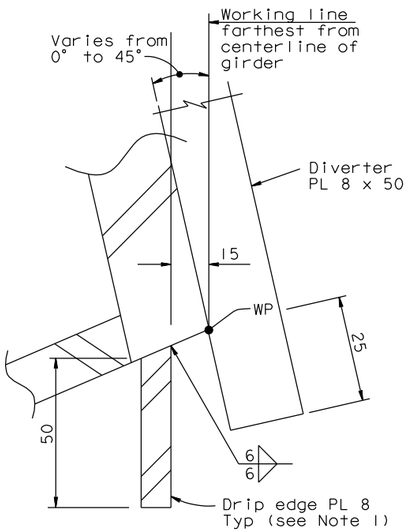

DETAIL B
1:1

MARK	DATE	DESCRIPTIONS	BY	CH'D	CCO#
1	08/24/07	BARRIER MODIFICATIONS	GB	DT	44

REVISIONS

CONTRACT CHANGE ORDER NO. ____
SHEET ___ OF ___

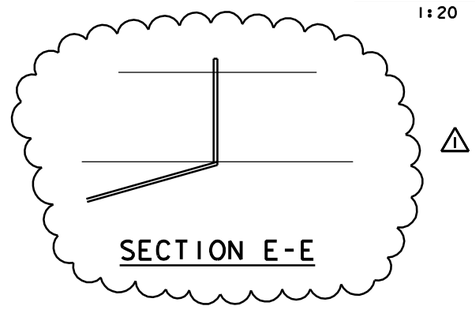

SECTION E-E

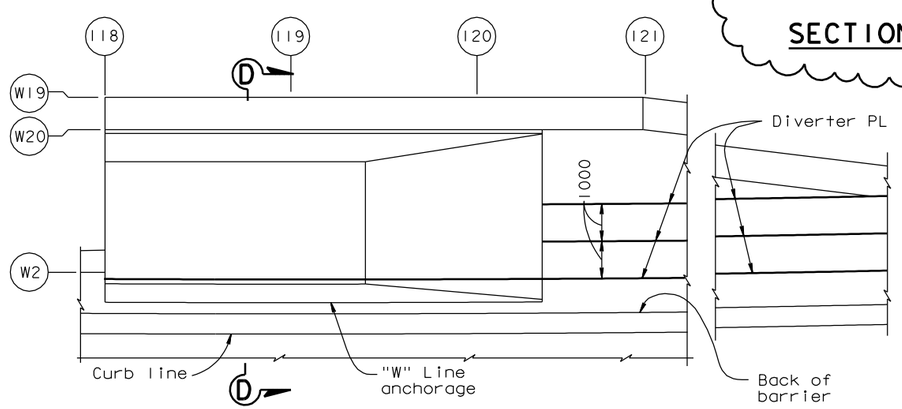

DRAINAGE PLAN AT "W" LINE ANCHORAGE
1:100

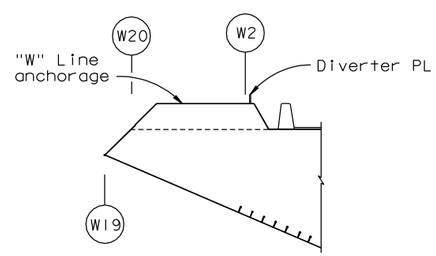

SECTION D-D
1:100

NOTES:

1. Drip edge plate shall be continuous along length of typical girder at working lines W1, W6, E1 and E6. For girder transitions at pier W2, tower and east approach, drip edge plate shall be continuous along bottom corner of working line farthest from the center line of girder.
2. Barrier diverter plate shall be continuous along barriers near working lines W2 and E5, unless otherwise shown.
3. For barrier flume details, see "Deck Drainage Details No.3" sheet.
4. For counterweight details, see "Typical Girder Details" sheets.
5. For barrier details, see "Barrier Details" sheets.
6. Use similar detail where diverter PLs meet edge of girder top face at "W" line anchorage and line E5 at PP 8.5.
7. At all drip edge and diverter plate terminations, the end 40 mm of weld shall be CJP.

4 REVISED PER ADDENDUM NO. 4 DATED DECEMBER 9, 2005

ALL DIMENSIONS ARE IN MILLIMETERS UNLESS OTHERWISE SHOWN

R. Valizadeh/V. Toan/Y.L./W.L./F.C.
DESIGN OVERSIGHT
Roya Valizadeh / Vong D. Toan / Y. Liu
SIGN OFF DATE 08/24/07

	BY	CHECKED
DESIGN	G. Baker	T. Ho
DETAILS	D. Turner	T. Ho
QUANTITIES	G. Baker	D. Harrison

PREPARED FOR THE STATE OF CALIFORNIA DEPARTMENT OF TRANSPORTATION

R. Manzanarez
PROJECT ENGINEER

BRIDGE NO. 34-0006L/R
KILOMETER POST 13.2/13.9

SAN FRANCISCO OAKLAND BAY BRIDGE
EAST SPAN SEISMIC SAFETY PROJECT
SELF-ANCHORED SUSPENSION BRIDGE
(SUPERSTRUCTURE & TOWER)

DECK DRAINAGE DETAILS NO. 2

Rev. Date: 5-18-98

ORIGINAL SCALE IN MILLIMETERS FOR REDUCED PLANS 0 10 20 30 40 50 60 70 80 90 100

CU 04
EA 0120F1

DISREGARD PRINTS BEARING EARLIER REVISION DATES

REVISION DATES (PRELIMINARY STAGE ONLY) 01/15/99 05/15/99 08/26/99 05/31/01 04/08/02 07/09/02 12/13/02 11/13/05

SHEET 460R1 OF

FILE => L:\BB\04-012001\SAS\Contract Plans and CCO\CCO\In Progress\CCO#44\DGN\akdkd02.dgn

100% PS&E

USERNAME => dwinrow DATE PLOTTED => 20 SEP 2007 TIME PLOTTED => 13:42:47