DIST	COUNTY	ROUTE	KILOMETER POST TOTAL PROJECT	SHEET No	TOTAL SHEETS
04	SF	80	13.2/13.9	313 R1	1204

REGISTERED ELECTRICAL ENGINEER 12/19/02 DATE

12-6-04
PLANS APPROVAL DATE

PB POWER, Inc.
A Parsons Brinckerhoff Company
303 Second St., Suite 700N
San Francisco, CA 94107-1317

REGISTERED PROFESSIONAL ENGINEER JENS ERLINGSSON No. 8249 Exp. 9/30/06 ELECTRICAL STATE OF CALIFORNIA

The State of California or its officers or agents shall not be responsible for the accuracy or completeness of electronic copies of this plan sheet.

Caltrans now has a web site! To get to the web site, go to http://www.dot.ca.gov

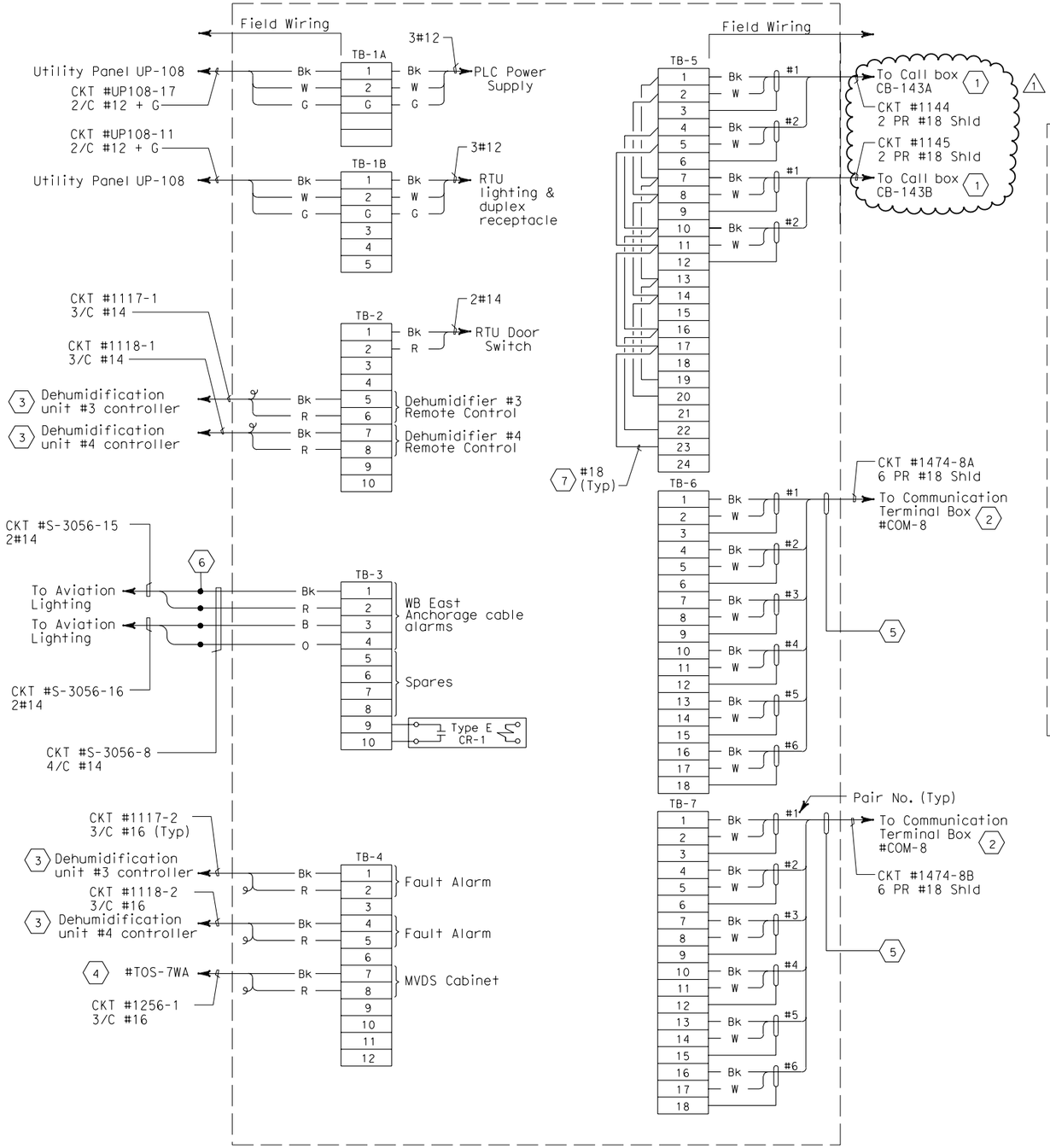

CONNECTION DIAGRAM - RTU #11W

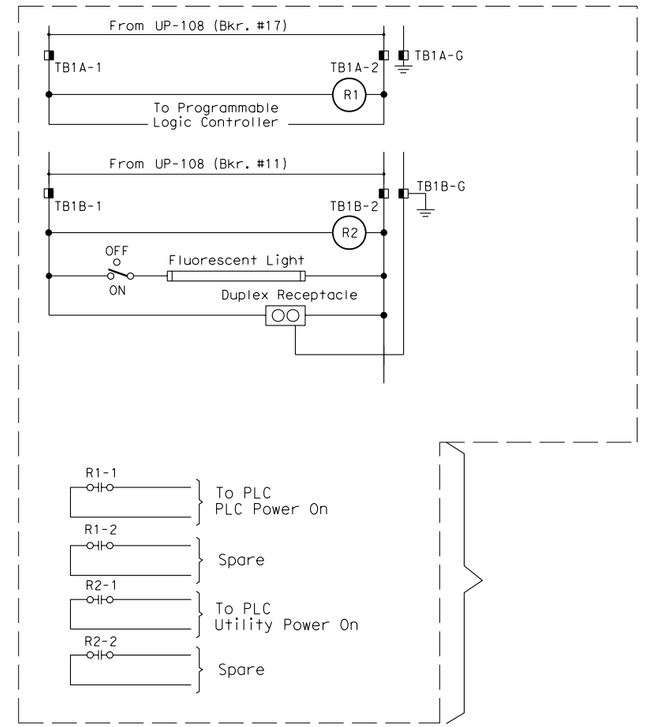

ELEMENTARY DIAGRAM - RTU #11W

SHEET NOTES:

1. For connection diagram to call boxes, see sheet E-398.
2. For connection diagram to scada system, see Table A, sheet E-325.
3. For connection diagram to dehumification controllers, see sheets E-79.
4. Connections to panel door switch. For remote alarm status to RTU.
5. Field to tape cable overall shield wire.
6. Conductors spliced inside junction box PB-2A located inside the girder.
7. The Contractor shall install resistors, approximately equal to the impedance (Zo) of the twised pairs, at the extreme ends of the multidrop network.

NOTES:

1. All spare conductors shall be coiled and taped at conductor ends unless terminated.
2. Terminate cable shields to low level ground bus.
3. References:
   - For UP-108 panel schedule, see sheet E-63.
   - For RTU #11W panel layout, see sheet E-320.
   - For circuit and conduit/cable tray schedules, see sheets starting at E-401.

REGISTERED PROFESSIONAL ENGINEER S. A. ESTOQUE, JR No. E-10151 Exp. 12/31/2008 ELECTRICAL STATE OF CALIFORNIA

FOR REVISION ONLY

REQUEST FOR INFORMATION NOT ADDRESSED IN THIS CCO REMAIN IN FORCE

MARK	DATE	DESCRIPTIONS	BY	CH'D	CCO#
1	03/04/08	BARRIER MODIFICATIONS	JS BM	RG SE	44

REVISIONS

CONTRACT CHANGE ORDER NO._____
SHEET_____ OF_____

DETAILS
SCADA REMOTE TERMINAL UNIT SYSTEM
RTU #11W ELEMENTARY AND CONNECTION DIAGRAM

NO SCALE

E-332

STATE OF CALIFORNIA - DEPARTMENT OF TRANSPORTATION
Caltrans

DESIGN OVERSIGHT: BEHZAD GOLEMOHAMMADI
CALCULATED/DESIGNED BY: EDC DATE 10/01 REVISED BY
CHECKED BY: JL 12/01 DATE REVISED

LAST REVISION 00-00-00
DATE PLOTTED => 5/22/2008
TIME PLOTTED => 10:56:40 AM

FOR REDUCED PLANS ORIGINAL SCALE IS IN MILLIMETERS 0 20 40 60 80

DGN FILE =>T:\13103\MS\pse\SAS Struc\CCO\SAS CC044\04-0120f1_0313R01.dgn
USERNAME =>llorico
CU 04251
EA 0120F1