DIST	COUNTY	ROUTE	KILOMETER POST TOTAL PROJECT	SHEET No	TOTAL SHEETS
04	SF	80	13.2/13.9	32R1	1204

REGISTERED CIVIL ENGINEER 12/19/02 DATE

12-6-04
PLANS APPROVAL DATE

REGISTERED PROFESSIONAL ENGINEER LAWRENCE M. JOHNSON No. C 44006 Exp. 6/30/05 CIVIL STATE OF CALIFORNIA

PARSONS BRINCKERHOFF QUADE & DOUGLAS, INC.
A Parsons Brinckerhoff Company
303 Second St., Suite 700N
San Francisco, CA 94107-1317

The State of California or its officers or agents shall not be responsible for the accuracy or completeness of electronic copies of this plan sheet.

Caltrans now has a web site! To get to the web site, go to http://www.dot.ca.gov

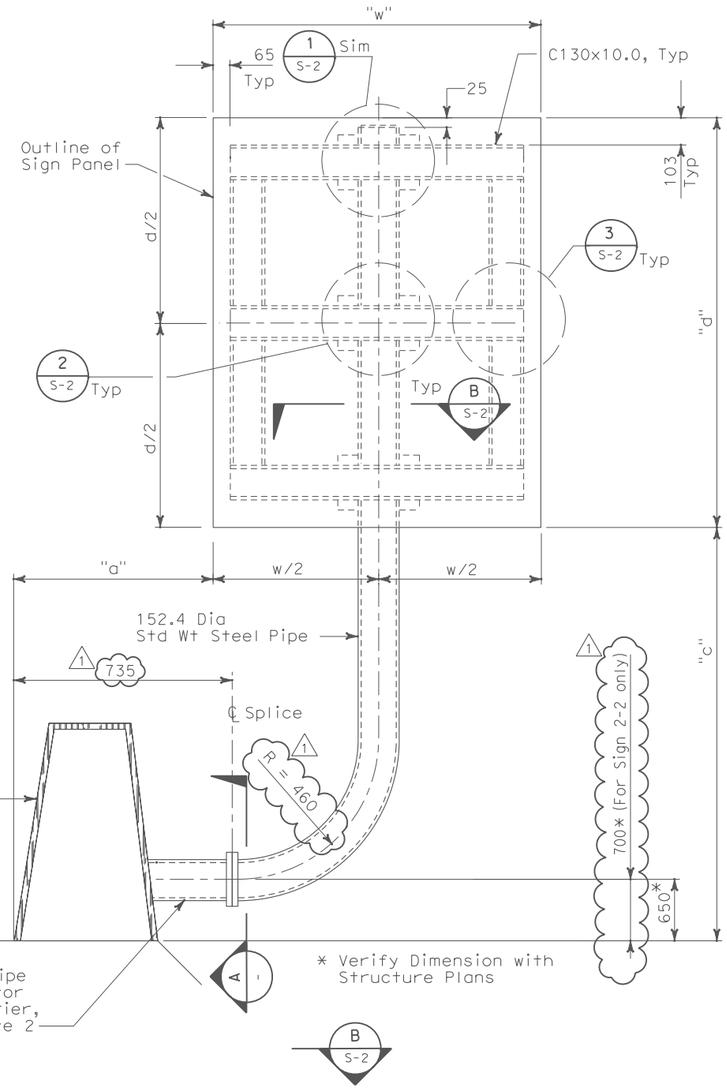

BARRIER MOUNTED SIGNS (TYPE D) DETAILS

Right Side
Left Side Opposite Hand

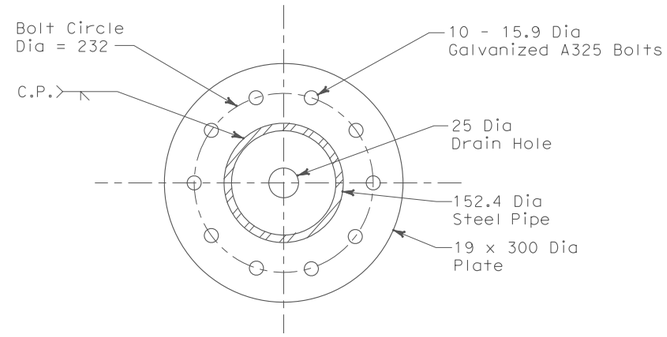

SPLICE

SECTION A -

GENERAL STRUCTURAL NOTES:

1. See S sheets, and "Barrier Mounted Signs" Table" for sign locations and sign panel dimensions.
2. For barrier details and steel pipe connectors at steel barriers, see Structures Plans.
3. Cap top of Steel Pipe. See Detail 1 sheet S-2.
4. All steel shall be galvanized
5. Sign Panels are State furnished.

BARRIER MOUNTED SIGNS

Sign	Sheet	Station (M)	Side	Barrier	Type	"a" (mm)	"c" (mm)	"d" (mm)	"e" (mm)	"w" (mm)
2-1	PD-2	W 57+90	Lt	Steel	D	610	2100	1524	-	1219
2-2	PD-2	W 57+90	Rt	Steel	D	610	2100	1524	-	1219
2-3	PD-2	E 57+50	Rt	Steel	D	610	2100	1524	-	1219
2-4	PD-2	E 57+50	Lt	Steel	D	610	2100	1524	-	1219

REQUEST FOR INFORMATION NOT ADDRESSED IN THIS CCO REMAIN IN FORCE

MARK	DATE	DESCRIPTIONS	BY	CH'D	CCO#
1	03/04/08	BARRIER MODIFICATIONS	RG	LJ SE	44

REVISIONS

CONTRACT CHANGE ORDER NO. _____
SHEET _____ OF _____

REGISTERED PROFESSIONAL ENGINEER LAWRENCE M. JOHNSON No. C 44006 Exp. 6/30/09 CIVIL STATE OF CALIFORNIA

FOR REVISION ONLY

ALL DIMENSIONS ARE IN MILLIMETERS UNLESS OTHERWISE SHOWN

SIGN DETAILS

NO SCALE

S-1

STATE OF CALIFORNIA - DEPARTMENT OF TRANSPORTATION
Caltrans

DESIGN OVERSIGHT: Bob Zandipour
CALCULATED/DESIGNED BY: LJ DATE 11/02
CHECKED BY: GVL
REVISED BY
DATE REVISED

DATE PLOTTED => 6/20/2008
TIME PLOTTED => 5:01:46 PM
LAST REVISION 00-00-00

FOR REDUCED PLANS ORIGINAL SCALE IS IN MILLIMETERS 0 20 40 60 80

DGN FILE =>t:\13103\MS\pse\SAS Struc\CCO\SAS CC044\04-0120f1_0032R01.dgn
USERNAME =>llorico
CU 04251
EA 0120F1