DIST	COUNTY	ROUTE	KILOMETER POST TOTAL PROJECT	SHEET No	TOTAL SHEETS
04	SF	80	13.2/13.9	314 R1	1204

REGISTERED ELECTRICAL ENGINEER 12/19/02 DATE

12-6-04
PLANS APPROVAL DATE

REGISTERED PROFESSIONAL ENGINEER JENS ERLINGSSON No. 8249 Exp. 9/30/06 ELECTRICAL STATE OF CALIFORNIA

PB POWER, Inc.
A Parsons Brinckerhoff Company
303 Second St., Suite 700N
San Francisco, CA 94107-1317

The State of California or its officers or agents shall not be responsible for the accuracy or completeness of electronic copies of this plan sheet.

Caltrans now has a web site! To get to the web site, go to http://www.dot.ca.gov

Caltrans Metric

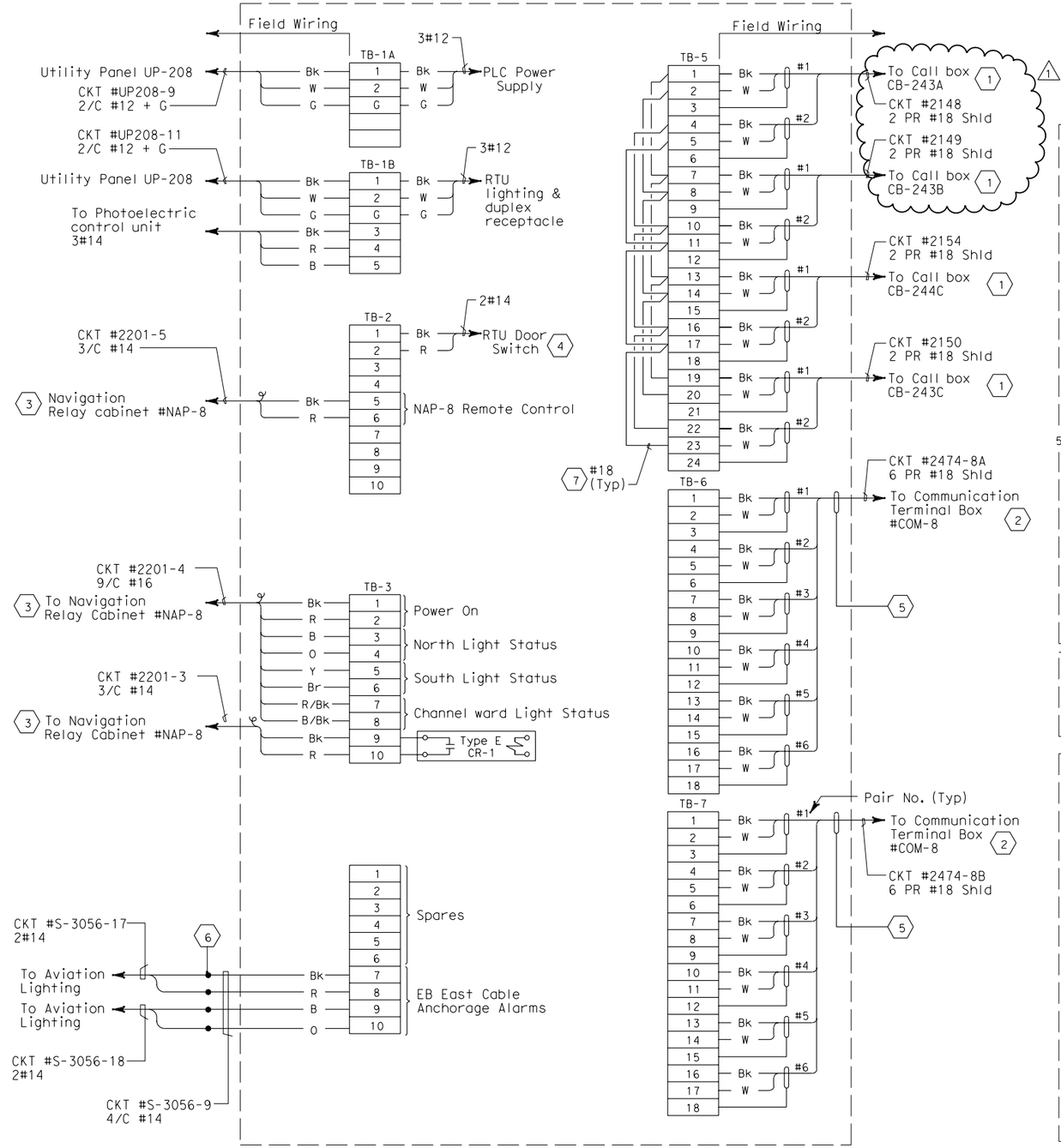

CONNECTION DIAGRAM - RTU #11E

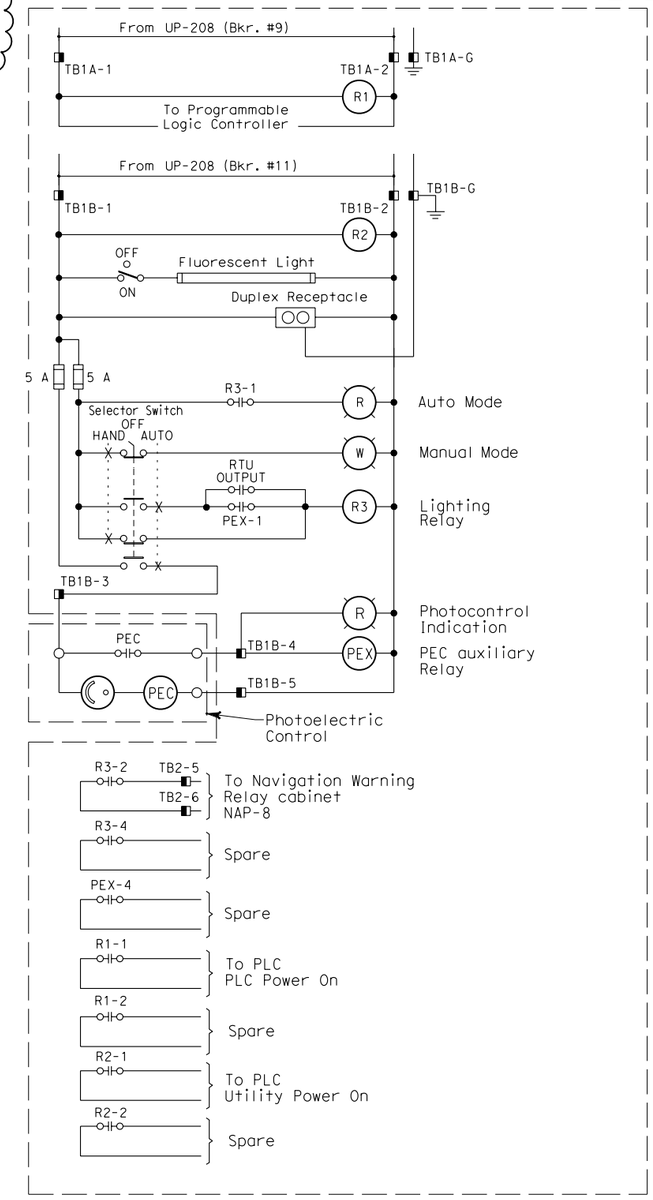

ELEMENTARY DIAGRAM - RTU #11E

(Navigation Lighting System)

SHEET NOTES:

1. For connection diagram to call boxes, see sheet E-400.
2. For connection diagram to scada system, see Table A, sheet E-325.
3. For connection diagram to navigation system, see sheet E-303.
4. Connections to panel door switch. For remote alarm status to RTU.
5. Field to tape cable overall shield wire.
6. Conductors spliced inside junction box PB-2A located inside the girder.
7. The Contractor shall install resistors, approximately equal to the impedance (Zo) of the twised pairs, at the extreme ends of the multidrop network.

NOTES:

1. All spare conductors shall be coiled and taped at conductor ends unless terminated.
2. Terminate cable shields to low level ground bus.
3. References:
   - For Up-208 panel schedule, see sheet E-154.
   - For navigation system elementary diagram, see sheet E-298.
   - For RTU #11E panel layout, see sheet E-320.
   - For circuit and conduit/cable tray schedules, see sheets starting at E-401.

REGISTERED PROFESSIONAL ENGINEER S. A. ESTOQUE, JR. No. E-10151 Exp. 12/31/2008 ELECTRICAL STATE OF CALIFORNIA

FOR REVISION ONLY

REQUEST FOR INFORMATION NOT ADDRESSED IN THIS CCO REMAIN IN FORCE

MARK	DATE	DESCRIPTIONS	BY	CH'D	CCO#
1	03/04/08	BARRIER MODIFICATIONS	JS BM	RG SE	44

REVISIONS

CONTRACT CHANGE ORDER NO._____
SHEET_____ OF_____

DETAILS
SCADA REMOTE TERMINAL UNIT SYSTEM
RTU #11E ELEMENTARY AND CONNECTION DIAGRAM

NO SCALE

E-333

STATE OF CALIFORNIA - DEPARTMENT OF TRANSPORTATION
Caltrans

DESIGN OVERSIGHT: BEHZAD GOLEMOHAMMADI

CALCULATED/ DESIGNED BY	DATE 10/01	REVISED BY	DATE REVISED
EDC	JL 11/01		
CHECKED BY			

LAST REVISION 00-00-00

DATE PLOTTED => 5/22/2008
TIME PLOTTED => 10:56:59 AM

FOR REDUCED PLANS ORIGINAL SCALE IS IN MILLIMETERS 0 20 40 60 80

DGN FILE =>T:\13103\MS\pse\SAS Struc\CCO\SAS CCO44\04-0120f1_0314R01.dgn
USERNAME =>llorico

CU 04251

EA 0120F1