DIST	COUNTY	ROUTE	KILOMETER POST TOTAL PROJECT	SHEET No	TOTAL SHEETS
04	SF	80	13.2/13.9	207 S1	1204

REGISTERED ELECTRICAL ENGINEER 9/18/2007 DATE

PLANS APPROVAL DATE

REGISTERED PROFESSIONAL ENGINEER MARNELL FUMIO TAKATA No. E 8651 Exp. 9/30/2008 ELECTRICAL STATE OF CALIFORNIA

PB AMERICAS, Inc.
A Parsons Brinckerhoff Company
303 Second St., Suite 700N
San Francisco, CA 94107-1317

The State of California or its officers or agents shall not be responsible for the accuracy or completeness of electronic copies of this plan sheet.

Caltrans now has a web site! To get to the web site, go to http://www.dot.ca.gov

Caltrans Metric

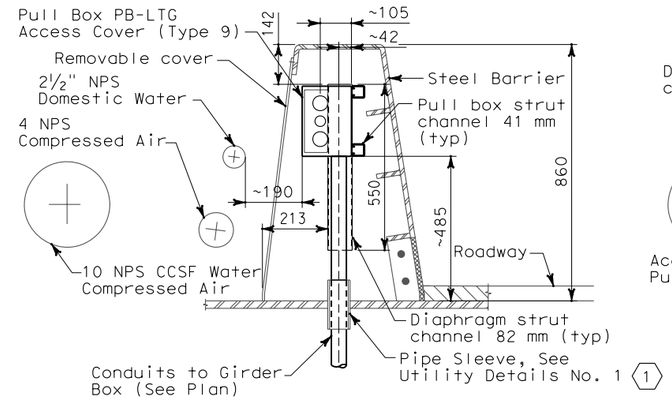

SECTION B-B

TYPICAL PULL BOX PB-LTG AND CONDUIT LOCATION (E5) (E2) (SIMILAR)
SCALE 1:10

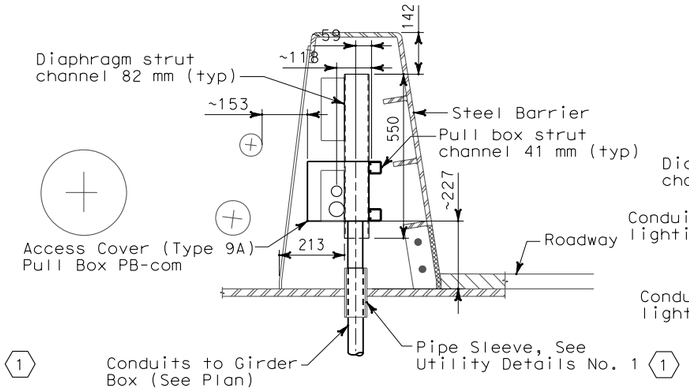

SECTION C-C

TYPICAL PULL BOX PB-COM AND CONDUIT LOCATION (E5) (E2) (SIMILAR)
SCALE 1:10

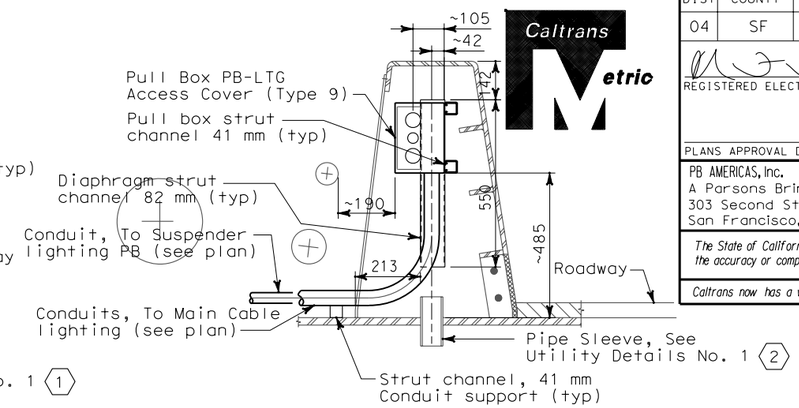

DETAIL 6

TYPICAL CONDUIT LOCATION FROM PULL BOX PB-LTG TO SUSPENDER AND MAIN CABLE LIGHTING (E5) (E2) (SIMILAR)
SCALE 1:10

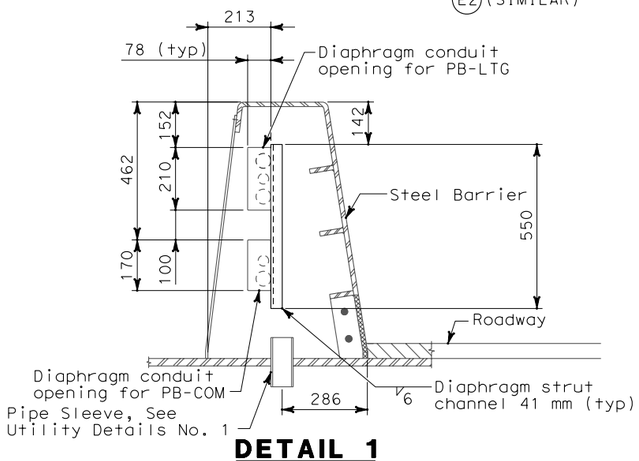

DETAIL 1

TYPICAL CONDUIT SUPPORT THROUGH DIAPHRAGM (E2)
SCALE 1:10

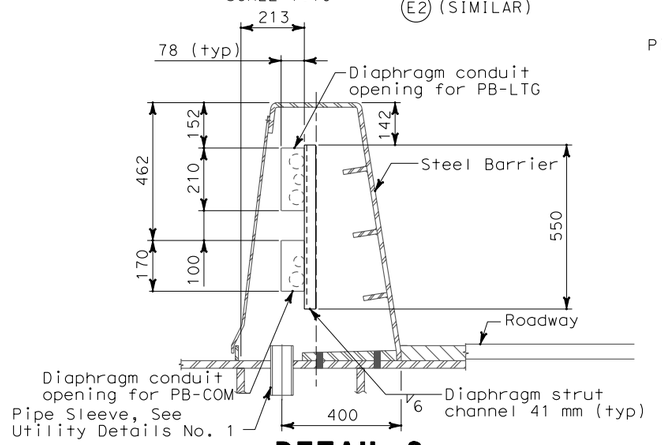

DETAIL 2

TYPICAL CONDUIT SUPPORT THROUGH DIAPHRAGM (E5)
SCALE 1:10

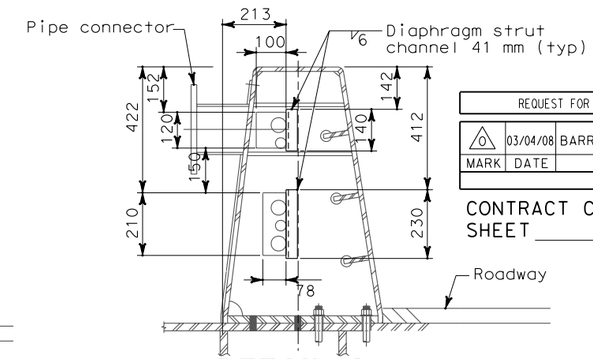

DETAIL 3

AT BARRIER WITH MOUNTED SIGNS
CONDUIT SUPPORT DIAPHRAGM E5 (PP38 + 1.250)
CONDUIT SUPPORT DIAPHRAGM E2 (PP38 + 1.250)
SCALE 1:10

REQUEST FOR INFORMATION NOT ADDRESSED IN THIS CCO REMAIN IN FORCE					
0	03/04/08	BARRIER MODIFICATIONS	JS BM	RG SE	44
MARK	DATE	DESCRIPTIONS	BY	CH'D	CCO#
		REVISIONS			

CONTRACT CHANGE ORDER NO. _____
SHEET _____ OF _____

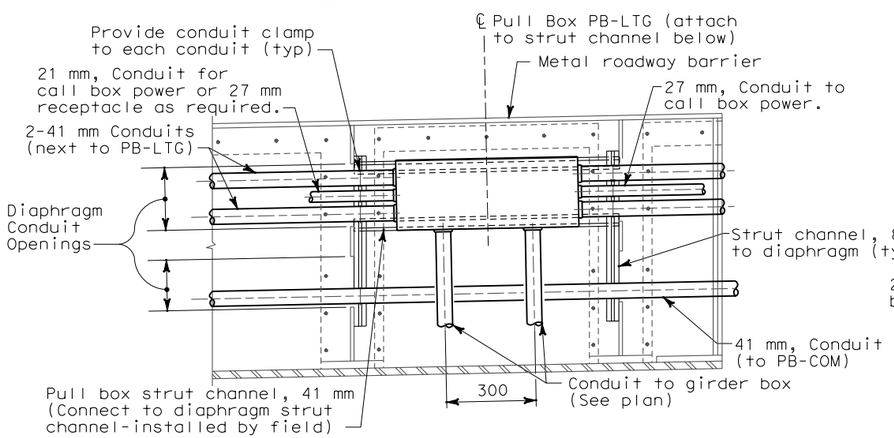

DETAIL 4

TYPICAL CONDUIT SUPPORT PULL BOX PB-LTG MOUNTING
SCALE 1:10

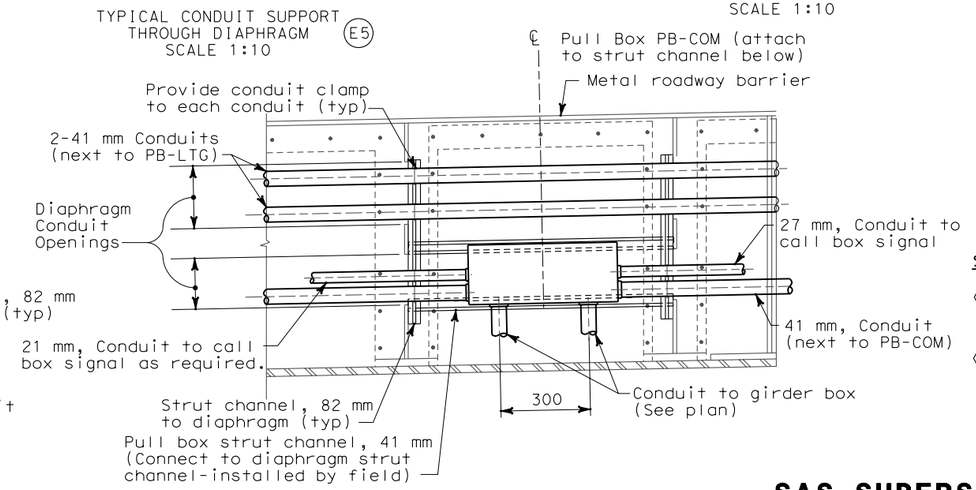

DETAIL 5

TYPICAL CONDUIT SUPPORT PULL BOX PB-COM MOUNTING
SCALE 1:10

NOTES:

1. References:
   - For pull box schedule, see Sheet E-169.
   - For barrier details, see structural drawings.
2. For location of pull boxes inside girder, see Sheet E-135 through E-140.

SHEET NOTES:

(1) To prevent moisture from passing inside the sleeve, the Contractor shall install sealant between the sleeve and conduit.

(2) Spare pipe sleeves shall be capped on both ends.

DETAILS
SAS SUPERSTRUCTURE ROADWAY CONDUIT AND PULL BOX LOCATIONS

SCALE AS NOTED

E-160A

DATE	BY	REVISED BY	DATE REVISED
09/07	JS	RG	09/07

CALCULATED/DESIGNED BY — CHECKED BY

DESIGN OVERSIGHT
BEHZAD GOLEMOHAMMADI

STATE OF CALIFORNIA - DEPARTMENT OF TRANSPORTATION
Caltrans

LAST REVISION 00-00-00 | DATE PLOTTED => 5/22/2008 TIME PLOTTED => 10:53:05 AM

THIS PLAN IS ACCURATE FOR ELECTRICAL WORK ONLY.

ALL DIMENSIONS ARE IN MILLIMETERS UNLESS OTHERWISE SHOWN.

FOR REDUCED PLANS ORIGINAL SCALE IS IN MILLIMETERS 0 20 40 60 80

DGN FILE =>T:\13103\MS\pse\SAS Struc\CCO\SAS CCO44\04-0120f1_02D7S01.dgn
USERNAME =>llorico

CU 04251

EA 0120F1