| DIST. | COUNTY | ROUTE | KILOMETER POST TOTAL PROJECT | SHEET NO. | TOTAL SHEETS |
|---|---|---|---|---|---|
| 04 | SF | 80 | 13.2/13.9 | 638R1 | 1204 |

George Baker
REGISTERED ENGINEER - CIVIL
12-6-04
PLANS APPROVAL DATE

REGISTERED PROFESSIONAL ENGINEER George S. Baker No. C 57112 Exp. 12/31/05 CIVIL STATE OF CALIFORNIA

*The State of California or its officers or agents shall not be responsible for the accuracy or completeness of electronic copies of this plan sheet.*

T.Y. LIN / MOFFATT & NICHOL
825 BATTERY STREET
SAN FRANCISCO, CA 94111

*Caltrans now has a web site! To get to the web site, go to: http://www.dot.ca.gov*

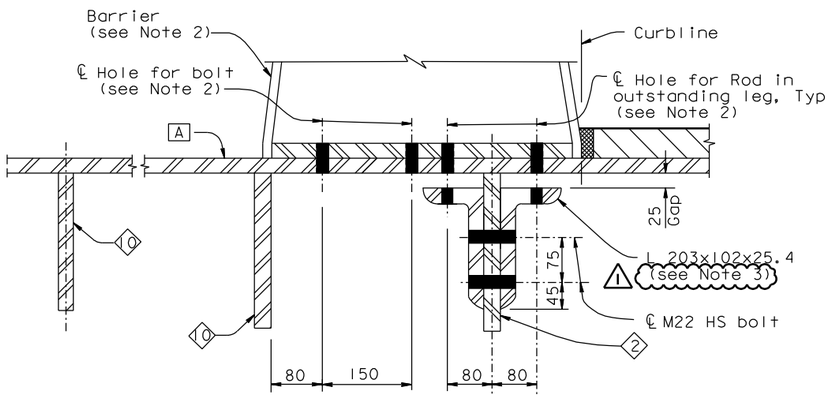


## SECTION A-A
1:5

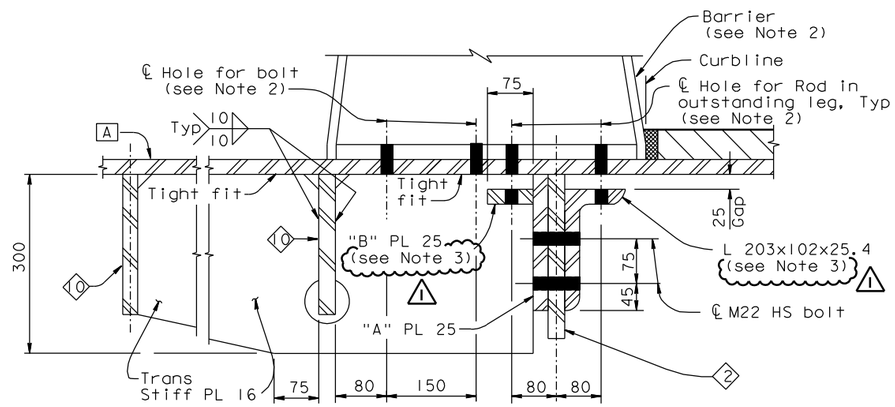


## SECTION B-B
1:5

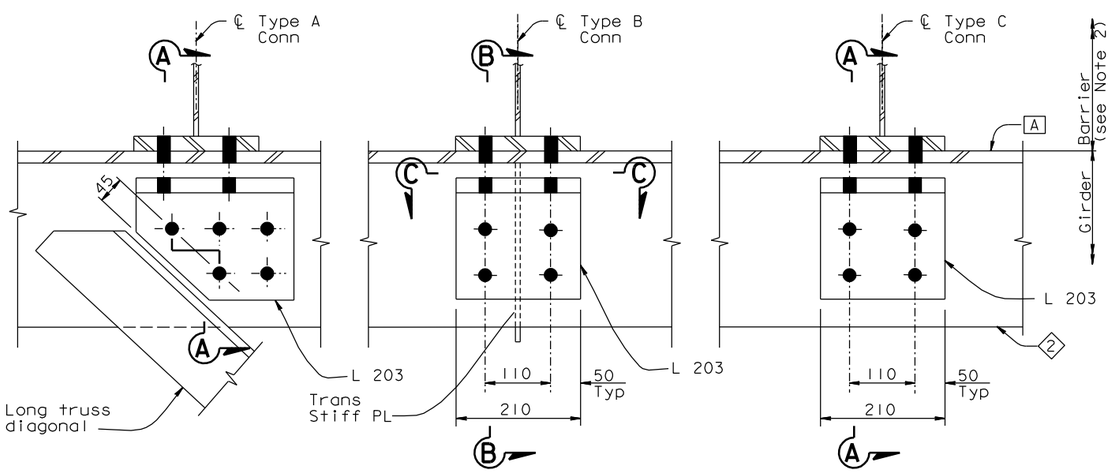


## BARRIER CONNECTION DETAILS (see Note 1)
1:5

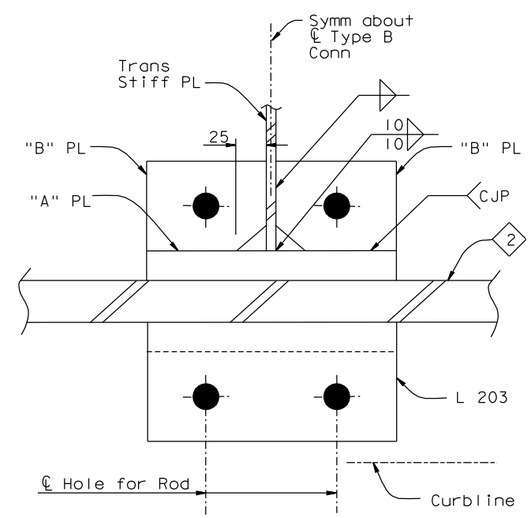


## SECTION C-C
1:2.5

NOTES:

1. For location of typical barrier connection types A, B and C, see "Typical Girder Details No. 12" sheet.
2. For typical barrier details, see "Barrier Details" sheets.
3. For bolt hole deviation due to fit-up tolerance, the minimum acceptable edge distance shall be 28 mm for angles and 32 mm for fabricated plate or cut edges.

REGISTERED PROFESSIONAL ENGINEER Marwan N. Nader No. C 054426 Exp. 12/31/11 CIVIL STATE OF CALIFORNIA

FOR REVISIONS ONLY

CONTRACT CHANGE ORDER NO. ____
SHEET ___ OF ___

*REQUESTS FOR INFORMATION NOT ADDRESSED IN THIS CCO REMAIN IN FORCE*

ALL DIMENSIONS ARE IN MILLIMETERS UNLESS OTHERWISE SHOWN

R. Valizadeh/V. Toan/Y.L./W.L./F.C.
DESIGN OVERSIGHT
SIGN OFF DATE 04/09/10

| MARK | DATE | DESCRIPTIONS | BY | CH'D | CCO# |
|---|---|---|---|---|---|
| 1 | 04/05/10 | BARRIER MODIFICATIONS | GB | MN | 44 |

REVISIONS

| | BY | CHECKED |
|---|---|---|
| DESIGN | G. Baker | P. Ritchie |
| DETAILS | C. Mauch | T. McMeans |
| QUANTITIES | G. Baker | M. Roberts |

PREPARED FOR THE STATE OF CALIFORNIA DEPARTMENT OF TRANSPORTATION

R. Manzanarez
PROJECT ENGINEER

BRIDGE NO. 34-0006L/R
KILOMETER POST 13.2/13.9

SAN FRANCISCO OAKLAND BAY BRIDGE
EAST SPAN SEISMIC SAFETY PROJECT
SELF-ANCHORED SUSPENSION BRIDGE (SUPERSTRUCTURE & TOWER)

# TYPICAL GIRDER DETAILS NO. 14

Rev. Date: 5-18-98

ORIGINAL SCALE IN MILLIMETERS FOR REDUCED PLANS 0 10 20 30 40 50 60 70 80 90 100

CU 04
EA 0120F1

DISREGARD PRINTS BEARING EARLIER REVISION DATES

REVISION DATES (PRELIMINARY STAGE ONLY) 05/31/01 04/08/02 07/01/02 12/19/02

SHEET 221R1 OF

FILE => I:\bb\04-012001\sas\contract plans and cco\cco\cco#44\16-revision 04-05-10\dgn\agdkd09.dgn

USERNAME => arivera DATE PLOTTED => 01 APR 2010 TIME PLOTTED => 16:52:58

100 % PS&E