DIST.	COUNTY	ROUTE	KILOMETER POST TOTAL PROJECT	SHEET NO.	TOTAL SHEETS
04	SF	80	13.2/13.9	966R2	1204

REGISTERED ENGINEER - CIVIL

1-27-03
PLANS APPROVAL DATE

REGISTERED PROFESSIONAL ENGINEER Marwan N. Nader No. C 054426 Exp. 12/31/09 CIVIL STATE OF CALIFORNIA

The State of California or its officers or agents shall not be responsible for the accuracy or completeness of electronic copies of this plan sheet.

T.Y. LIN / MOFFATT & NICHOL
825 BATTERY STREET
SAN FRANCISCO, CA 94111

To get to the web site, go to: http://www.dot.ca.gov

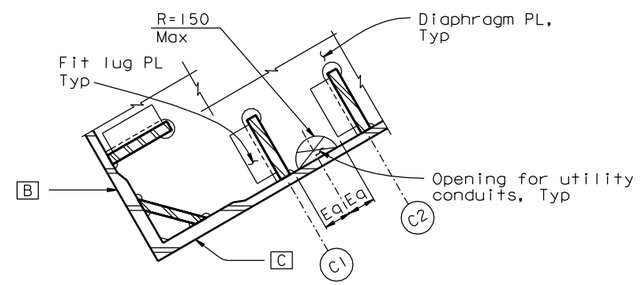

TYPICAL
1:20

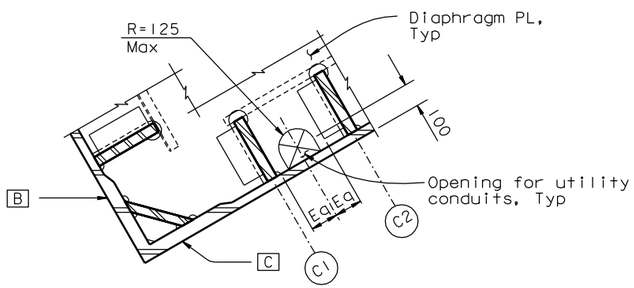

AT DIAPHRAGM TYPE 2C ONLY
1:20

DIAPHRAGM COPE DETAIL FOR UTILITY CONDUITS

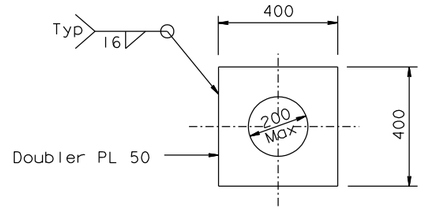

FOR DEHUMIDIFICATION CONDUITS (see Note 3)
1:10

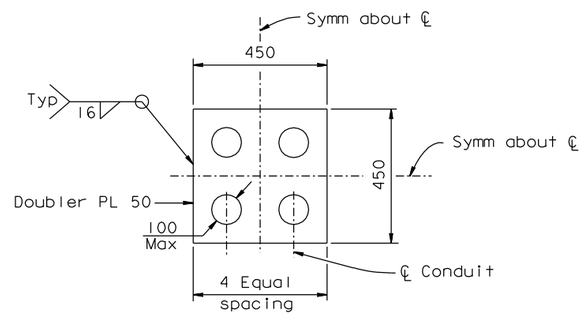

FOR ELECTRIC CONDUITS (see Note 1)
1:10

HOLE STIFFENING DETAIL FOR UTILITY CONDUITS

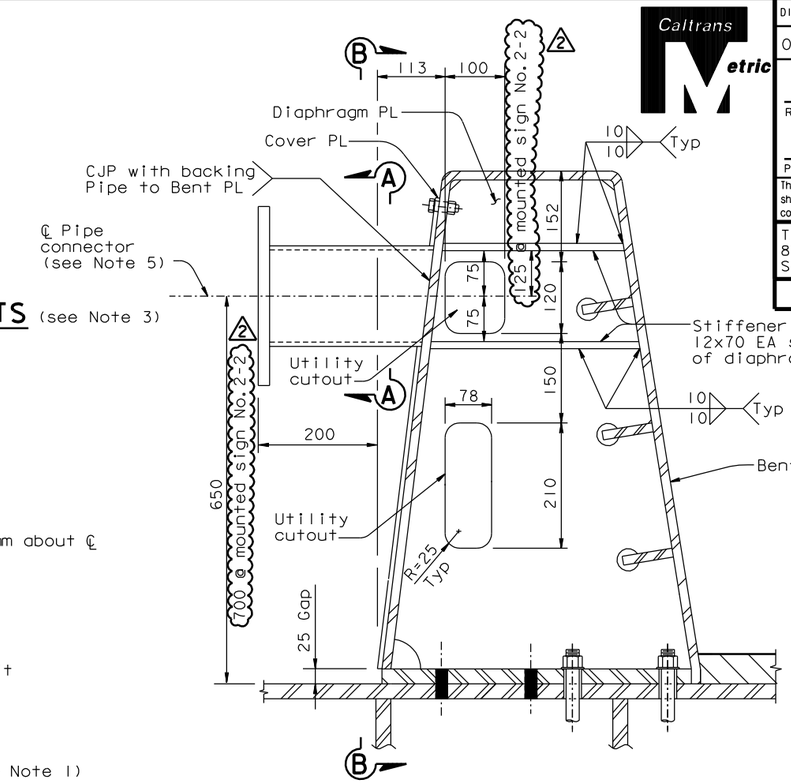

PIPE CONNECTOR FOR SIGN ON BARRIER
1:5

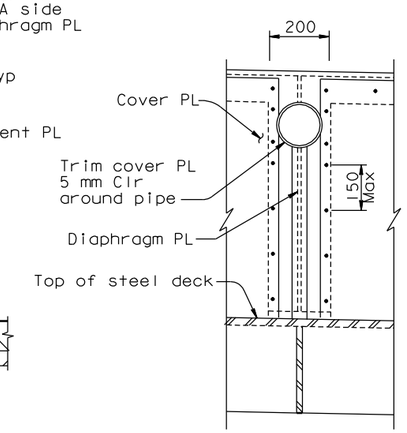

SECTION B-B
1:10

LEGEND:

(C1) Tower longitudinal stiffener designation (see Note 4)

NOTES:

1. Drill holes (100 Dia Max) as required up to 4 maximum. Seal around conduits with silicone caulk with backing rods.
2. For utility layout and details, see "Road Plans".
3. Drill hole and seal to conduits as required for dehumidification conduits. For other duct penetrations, see similar "Duct Opening Detail" on "Dehumidification Support Details No.5" sheet.
4. For tower longitudinal stiffener locations, see "Tower Shaft Details" sheets.
5. Pipe connector must line up with barrier diaphragm. Sign location shall be moved to the nearest diaphragm. See "Barrier Details" sheets for barrier details. See Road Plans for sign details.
6. For mounting screw and openings in mounting PL see "Road Plans."
7. For conduit and box support details, see "Road Plans".

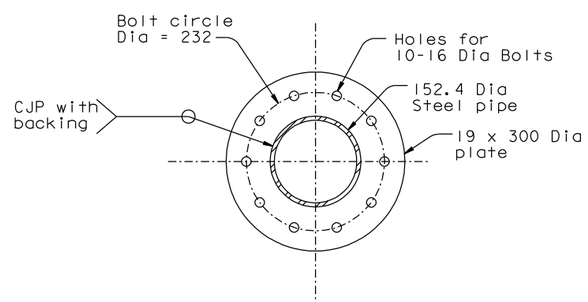

SECTION A-A
1:5

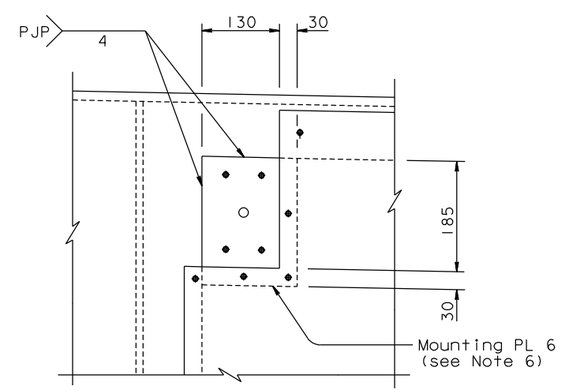

RECEPTACLE MOUNTING
1:5

REQUESTS FOR INFORMATION NOT ADDRESSED IN THIS CCO REMAIN IN FORCE					
2	04/18/08	BARRIER MODIFICATIONS	AS	MN	44
1	08/24/07	BARRIER MODIFICATIONS	GB	MN	44
MARK	DATE	DESCRIPTIONS	BY	CH'D	CCO#
REVISIONS					

CONTRACT CHANGE ORDER NO. ____
SHEET ___ OF ___

ALL DIMENSIONS ARE IN MILLIMETERS UNLESS OTHERWISE SHOWN

SAN FRANCISCO OAKLAND BAY BRIDGE
EAST SPAN SEISMIC SAFETY PROJECT
SELF-ANCHORED SUSPENSION BRIDGE
(SUPERSTRUCTURE & TOWER)

UTILITY DETAILS NO. 2

R. Valizadeh/V. Toan/Y.L./W.L./F.C.
DESIGN OVERSIGHT
Reza Valizadeh / Vong Toan / Y. Liu
SIGN OFF DATE 04/18/08

	BY	CHECKED
DESIGN	M. Nader	T. Ho
DETAILS	L. Rus	T. Ho
QUANTITIES	L. Rus	D. Harrison

PREPARED FOR THE STATE OF CALIFORNIA DEPARTMENT OF TRANSPORTATION

R. Manzanarez
PROJECT ENGINEER

BRIDGE NO. 34-0006L/R
KILOMETER POST 13.2/13.9

Rev. Date: 5-18-98

ORIGINAL SCALE IN MILLIMETERS FOR REDUCED PLANS 0 10 20 30 40 50 60 70 80 90 100

CU 04
EA 0120F1

DISREGARD PRINTS BEARING EARLIER REVISION DATES

REVISION DATES (PRELIMINARY STAGE ONLY) 04/08/02 07/01/02 12/14/02 11/13/05

SHEET 549R2 OF

FILE => L:\BB\04-012001\SAS\Contract Plans and CCO\CCO\In Progress\CCO#44\Update 04-18-08\DGN\akmsc14.dgn

USERNAME => vignotovs DATE PLOTTED => 18 APR 2008 TIME PLOTTED => 09:06

100% PS&E