DIST.	COUNTY	ROUTE	KILOMETER POST TOTAL PROJECT	SHEET NO.	TOTAL SHEETS
04	SF	80	13.2/13.9	903SIRI	1204

Caltrans Metric

REGISTERED ENGINEER - CIVIL

10-31-07
PLANS APPROVAL DATE

REGISTERED PROFESSIONAL ENGINEER Tien Hung Ho No. C 43990 Exp. 6/30/09 CIVIL STATE OF CALIFORNIA

The State of California or its officers or agents shall not be responsible for the accuracy or completeness of electronic copies of this plan sheet.

T.Y. LIN / MOFFATT & NICHOL
825 BATTERY STREET
SAN FRANCISCO, CA 94111

Caltrans now has a web site! To get to the web site, go to: http://www.dot.ca.gov

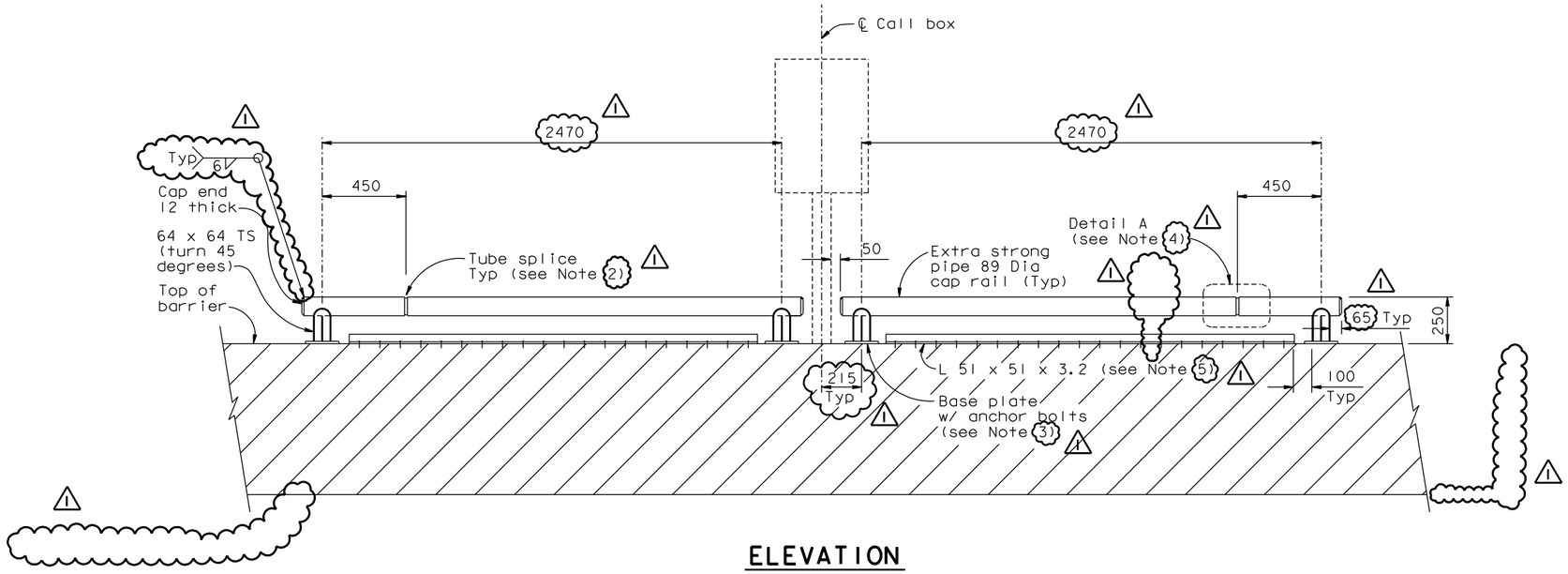

ELEVATION
1:15

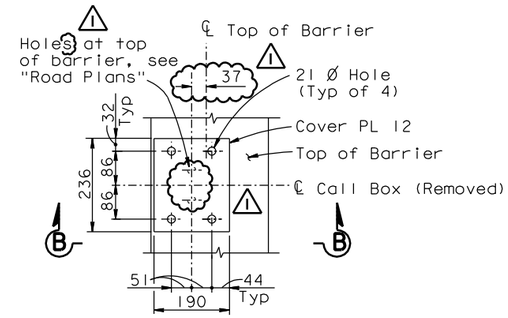

PLAN

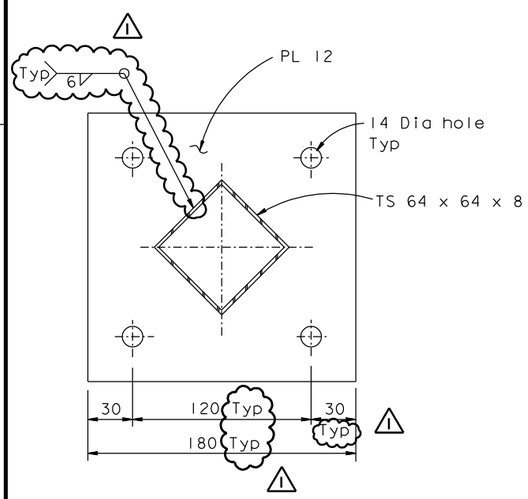

SECTION A-A
1:2

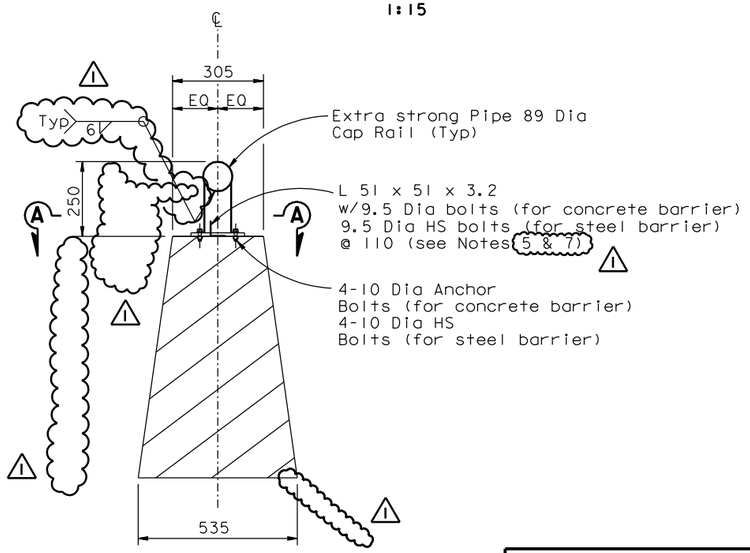

ELEVATION VIEW
1:10

RAILING AT CALL BOX

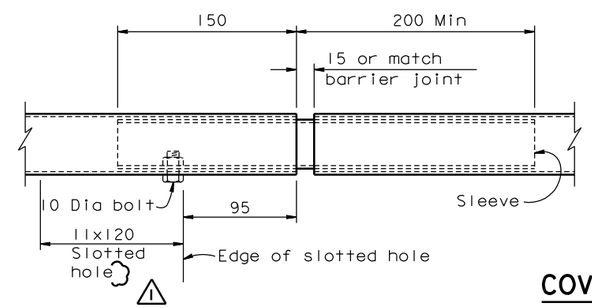

DETAIL A
1:2.5

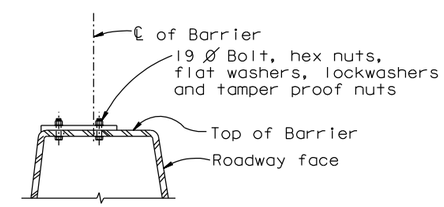

SECTION B-B

COVER PLATE AT REMOVED CALL BOX (STEEL BARRIER)
1:7.5

NOTES:

1. The details in this sheet are intended for both SAS and Skyway structures. Use applicable details as required.
2. Tube splice may be located 450 mm away from either end of rail support.
3. A grout pad to level rail base plates shall be used for concrete barrier.
4. Tube splice required at steel barriers only.
5. Cut angle and provide a 15 mm gap at steel barrier joint.
6. For call box locations, see "Road Plans".
7. Adjust bolt spacing to miss the barrier diaphragm.

REQUESTS FOR INFORMATION NOT ADDRESSED IN THIS CCO REMAIN IN FORCE					
1	06/13/08	BARRIER MODIFICATIONS	TH	AS	44
0	10/31/07	BARRIER MODIFICATIONS	TH	AS	44
MARK	DATE	DESCRIPTIONS	BY	CH'D	CCO#
		REVISIONS			

CONTRACT CHANGE ORDER NO. ____
SHEET ___ OF ___

ALL DIMENSIONS ARE IN MILLIMETERS UNLESS OTHERWISE SHOWN

SAN FRANCISCO OAKLAND BAY BRIDGE
EAST SPAN SEISMIC SAFETY PROJECT
SELF-ANCHORED SUSPENSION BRIDGE
(SUPERSTRUCTURE & TOWER)

RAILING DETAILS NO. 6A

R. Valizadeh/V. Toan/Y.L./W.L./F.C.
DESIGN OVERSIGHT
Roya Valizadeh / Vong Toan / Y. Liu
SIGN OFF DATE 06/13/08

	BY	CHECKED
DESIGN	T. Ho	A. Sanjines
DETAILS	T. Ho	A. Sanjines
QUANTITIES	T. Ho	A. Sanjines

PREPARED FOR THE STATE OF CALIFORNIA DEPARTMENT OF TRANSPORTATION

R. Manzanarez
PROJECT ENGINEER

BRIDGE NO. 34-0006L/R
KILOMETER POST 13.2/13.9

CU 04
EA 0120F1

Rev. Date: 5-18-98

ORIGINAL SCALE IN MILLIMETERS FOR REDUCED PLANS 0 10 20 30 40 50 60 70 80 90 100

DISREGARD PRINTS BEARING EARLIER REVISION DATES 10/31/07

REVISION DATES (PRELIMINARY STAGE ONLY) | SHEET 486SIR1 | OF

FILE => I:\bb\04-012001\sas\contract plans and cco\cco\in progress\cco#44\update 6-13-08\dgn\akrig10.dgn

USERNAME => ptom DATE PLOTTED => 11 JUN 2008 TIME PLOTTED => 16:11:28

100% PS&E