DIST.	COUNTY	ROUTE	KILOMETER POST TOTAL PROJECT	SHEET NO.	TOTAL SHEETS
04	SF	80	13.2/13.9	903R1	1204

Caltrans Metric

REGISTERED ENGINEER - CIVIL

12-6-04
PLANS APPROVAL DATE

REGISTERED PROFESSIONAL ENGINEER Tien Hung Ho No. C 43990 Exp. 06/30/09 CIVIL STATE OF CALIFORNIA

The State of California or its officers or agents shall not be responsible for the accuracy or completeness of electronic copies of this plan sheet.

T.Y. LIN / MOFFATT & NICHOL
825 BATTERY STREET
SAN FRANCISCO, CA 94111

To get to the web site, go to: http://www.dot.ca.gov

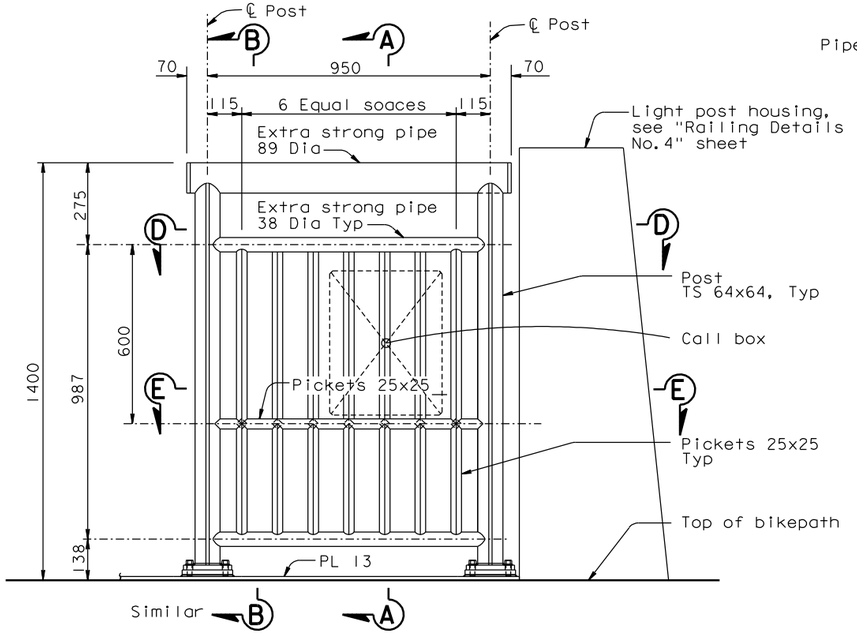

CALL BOX AT BELVEDERE ELEVATION

1:10
(Type D modified)

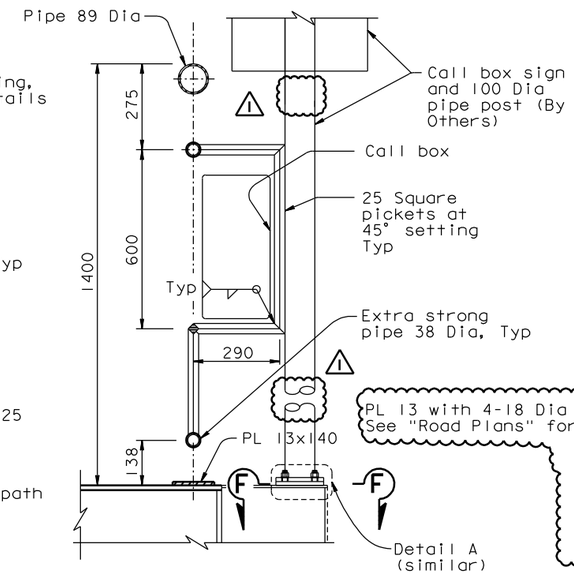

SECTION A-A

1:10

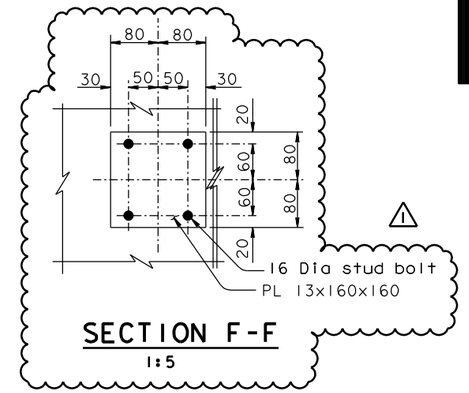

SECTION F-F

1:5

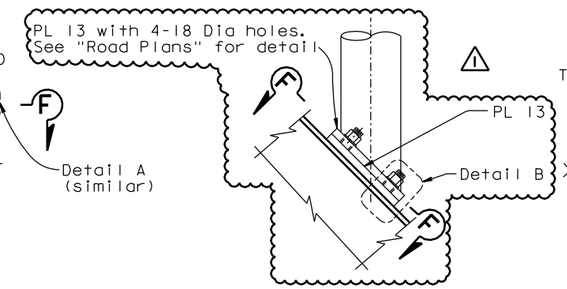

DETAIL A

1:5

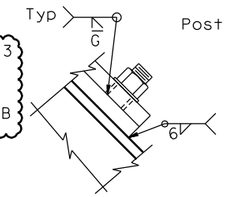

DETAIL B

1:2.5

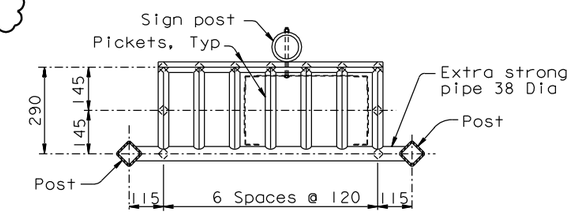

SECTION D-D

1:10

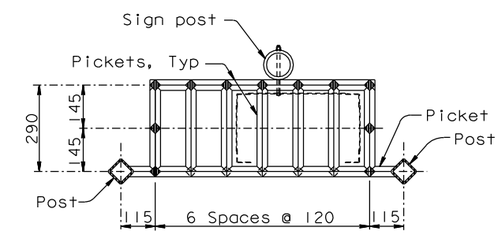

SECTION E-E

1:10

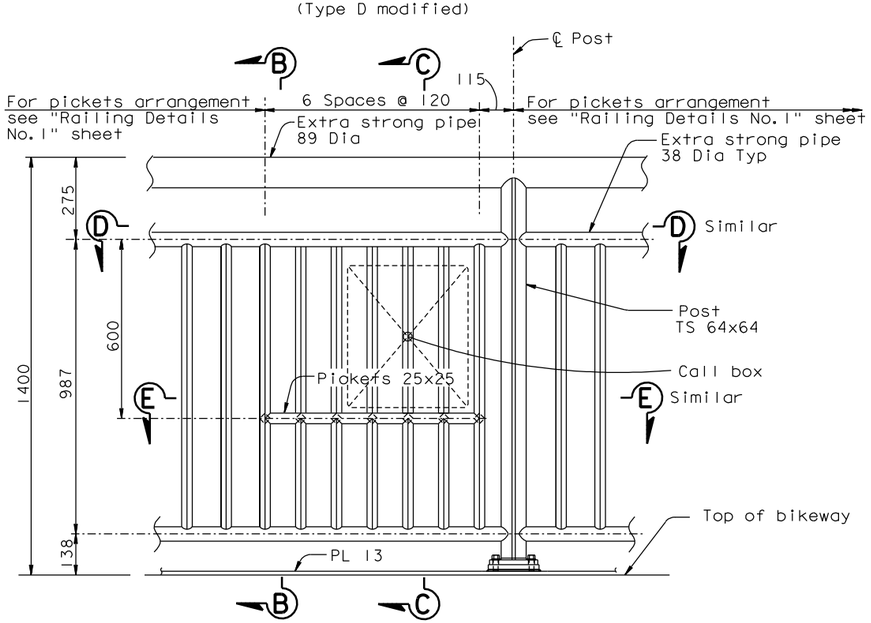

TYPICAL CALL BOX ELEVATION

1:10
(Type A modified)

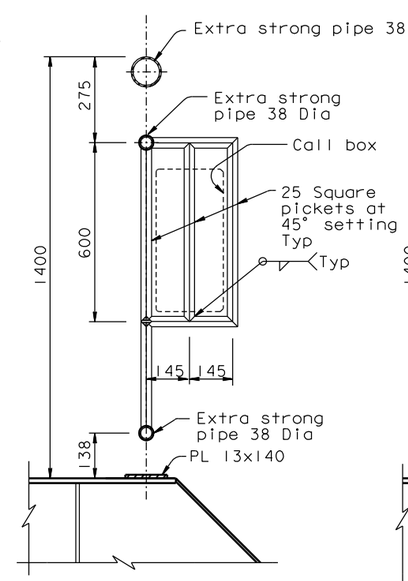

SECTION B-B

1:10

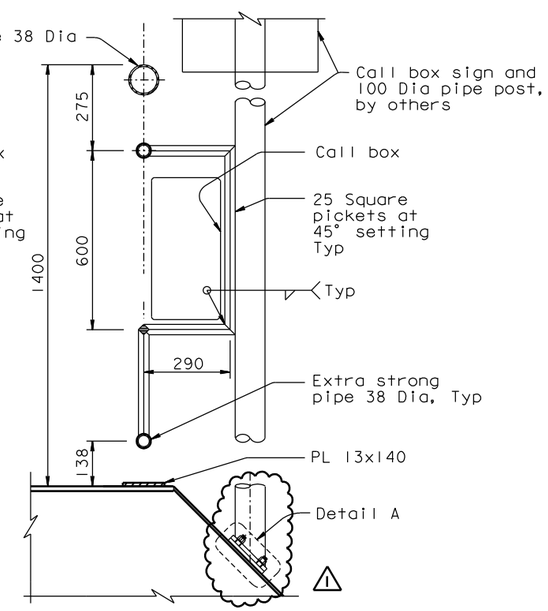

SECTION C-C

1:10

ALL DIMENSIONS ARE IN MILLIMETERS UNLESS OTHERWISE SHOWN

REQUESTS FOR INFORMATION NOT ADDRESSED IN THIS CCO REMAIN IN FORCE

MARK	DATE	DESCRIPTIONS	BY	CH'D	CCO#
1	03/21/08	BARRIER MODIFICATIONS	TH	AS	44

REVISIONS

CONTRACT CHANGE ORDER NO. ____
SHEET ____ OF ____

NOTES:

1. For layout, see "Railing Layout" sheets.

2. For details not shown, see "Railing Details" sheets.

100 % PS&E

USERNAME => vignotovsk DATE PLOTTED => 21 MAR 2008 TIME PLOTTED => 13:56:04

R. Valizadeh/V. Toan/Y.L./W.L./F.C.
DESIGN OVERSIGHT
SIGN OFF DATE 03/21/08

Rev. Date: 5-18-98

	BY	CHECKED
DESIGN	T. Ho	C. Redfield
DETAILS	R. Xu	C. Redfield
QUANTITIES	G. Baker	K. Cormier

PREPARED FOR THE STATE OF CALIFORNIA DEPARTMENT OF TRANSPORTATION

R. Manzanarez
PROJECT ENGINEER

BRIDGE NO. 34-0006L/R
KILOMETER POST 13.2/13.9

SAN FRANCISCO OAKLAND BAY BRIDGE
EAST SPAN SEISMIC SAFETY PROJECT
SELF-ANCHORED SUSPENSION BRIDGE
(SUPERSTRUCTURE & TOWER)

RAILING DETAILS NO. 6

ORIGINAL SCALE IN MILLIMETERS FOR REDUCED PLANS 0 10 20 30 40 50 60 70 80 90 100

CU 04
EA 0120F1

DISREGARD PRINTS BEARING EARLIER REVISION DATES

REVISION DATES (PRELIMINARY STAGE ONLY) 04/08/02 07/01/02 12/19/02

SHEET 486R1 OF

FILE => I:\bb\04-012001\sas\contract plans and cco\cco\in progress\cco#44\update 03-21-08\dgn\akrlg09.dgn