DIST.	COUNTY	ROUTE	KILOMETER POST TOTAL PROJECT	SHEET NO.	TOTAL SHEETS
04	SF	80	13.2/13.9	889R2	1204

REGISTERED ENGINEER - CIVIL

12-6-04
PLANS APPROVAL DATE

REGISTERED PROFESSIONAL ENGINEER Tien Hung Ho No. C 43990 Exp. 6/30/09 CIVIL STATE OF CALIFORNIA

The State of California or its officers or agents shall not be responsible for the accuracy or completeness of electronic copies of this plan sheet.

T.Y. LIN / MOFFATT & NICHOL
825 BATTERY STREET
SAN FRANCISCO, CA 94111

Caltrans now has a web site! To get to the web site, go to: http://www.dot.ca.gov

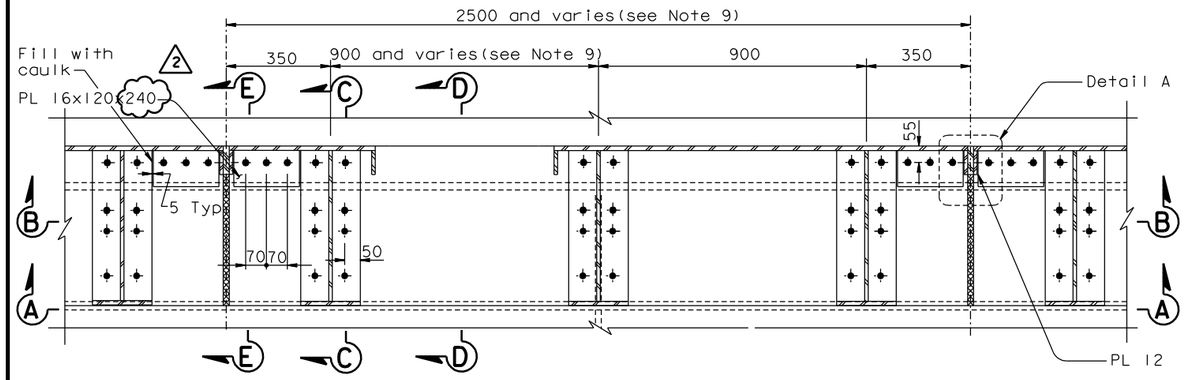

PLAN-STEEL BARRIER Type 732 Modified for W5 E2

1:10

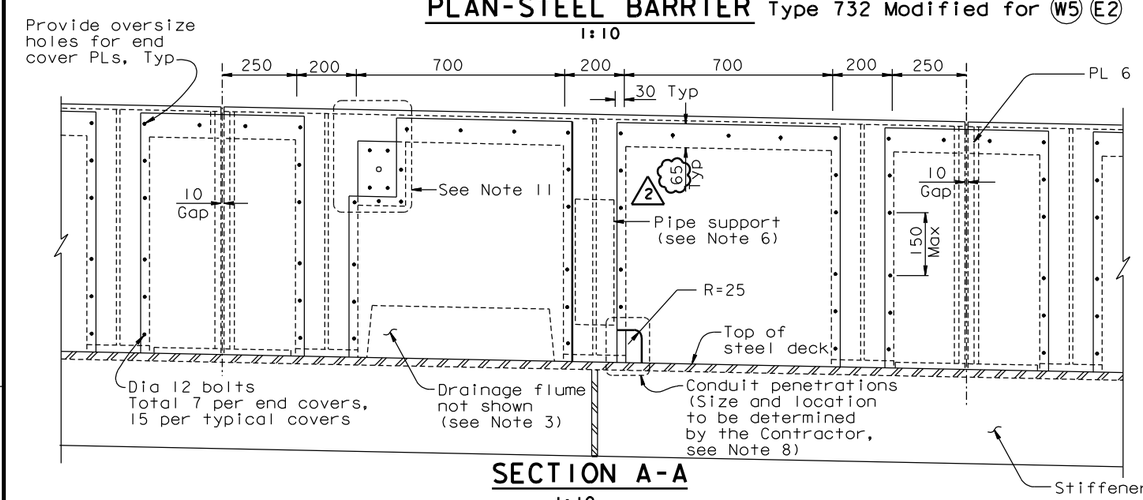

SECTION A-A

1:10

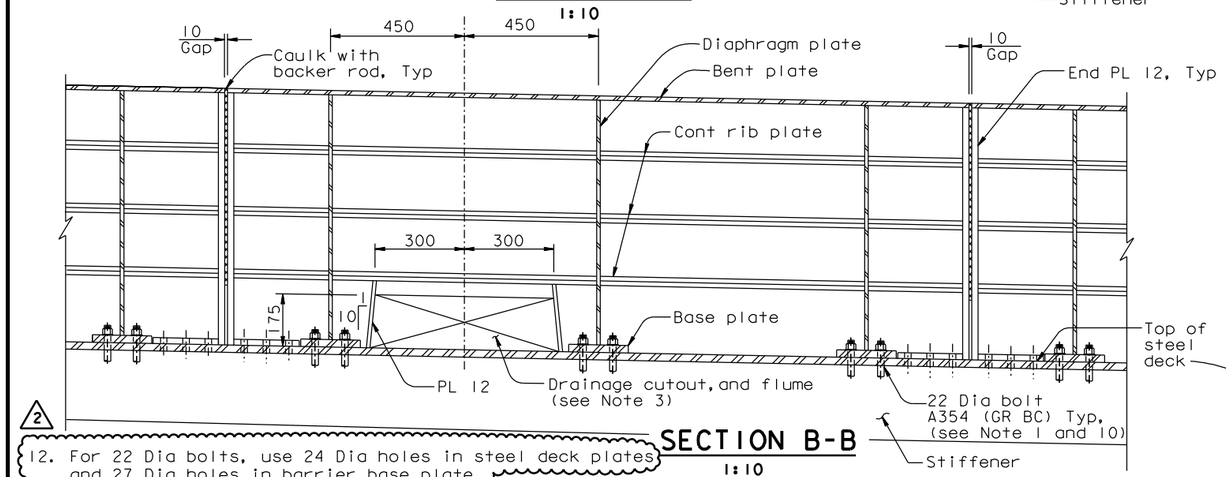

SECTION B-B

1:10

12. For 22 Dia bolts, use 24 Dia holes in steel deck plates and 27 Dia holes in barrier base plate.
13. For conduit and box support details, see "Road Plans".

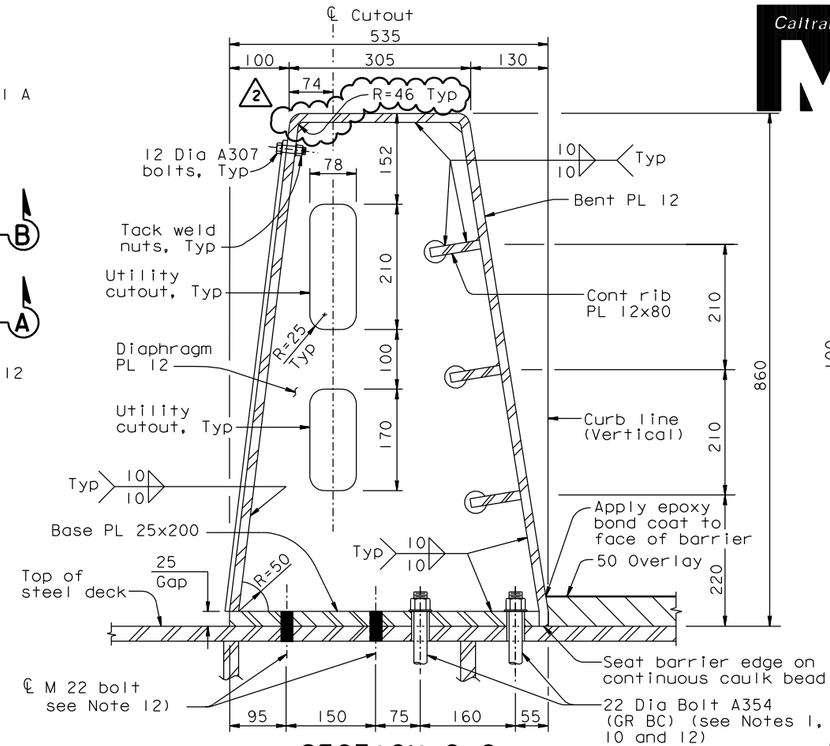

SECTION C-C

1:5

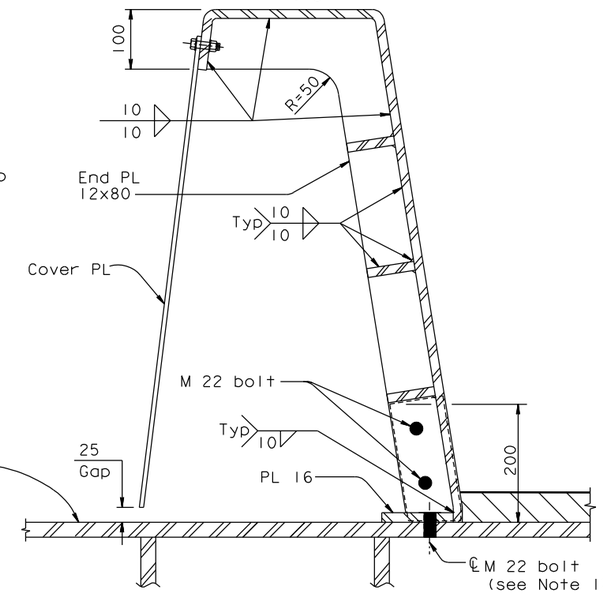

SECTION E-E

1:5

ALL DIMENSIONS ARE IN MILLIMETERS UNLESS OTHERWISE SHOWN

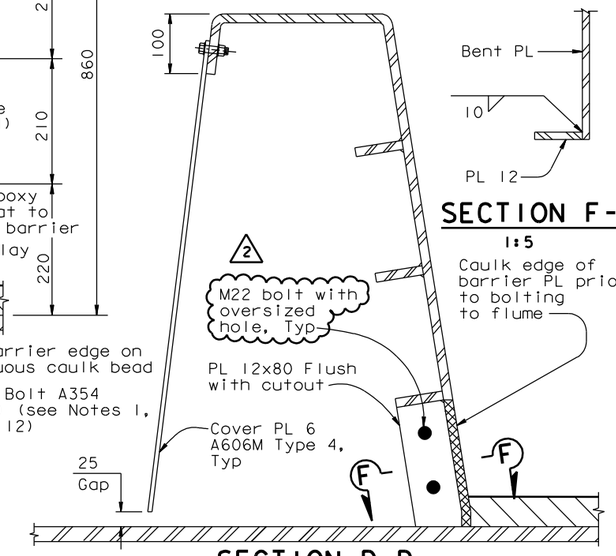

SECTION F-F

1:5

SECTION D-D

1:5

NOTES:

1. For steel barrier to box girder connection details, see "Typical Girder Details" sheets.
2. Inlets and flume plates exist on south barrier of each deck only.
3. For locations and details of drainage features, see "Deck Drainage Details" sheets.
4. For Detail A, see "Barrier Details No.2" sheet.
5. For conduit penetration thru deck and beveled plate detail, see "Utility Details" sheets.
6. For utilities inside barrier, pipe supports and other attachments to barrier, see "Road Plans".
7. For "Barrier Details" sheets, the Contractor shall verify all controlling field dimensions before ordering or fabricating any material.
8. The Contractor shall provide cutouts for conduit penetrations as required. Conduit penetrations shall be arranged so as to allow removal of cover plate.
9. Barrier length and diaphragm spacing varies west of PP 9 and from PP 118 to Hinge A. See Detail D on "Girder at Pier W2 No.3" sheet and "Girder Framing Plan No.4" sheet.
10. Following installation of all HS Bolts all A354 (GR BC) bolts for barrier segment shall be installed snug tight. They shall then be tightened by an additional one-half turn of the nut.
11. For recepticle mounting see "Utility Details No.2". For locations see "Road Plans".

100% PS&E

USERNAME => vignatovsky DATE PLOTTED => 18 APR 2008 TIME PLOTTED => 13:30:13

REQUESTS FOR INFORMATION NOT ADDRESSED IN THIS CCO REMAIN IN FORCE

MARK	DATE	DESCRIPTIONS	BY	CH'D	CCO#
2	04/18/08	BARRIER MODIFICATIONS	GB	TH	44
1	08/24/07	BARRIER MODIFICATIONS	GB	TH	44

REVISIONS

CONTRACT CHANGE ORDER NO. ____
SHEET ___ OF ___

R. Valizadeh/V. Toan/Y.L./W.L./F.C.
DESIGN OVERSIGHT
Roya Valizadeh / Vong Toan / Y. Liu
SIGN OFF DATE 04/18/08

Rev. Date: 5-18-98

DESIGN	BY T. Ho	CHECKED M. Nader	
DETAILS	BY G. Baker	CHECKED M. Nader	
QUANTITIES	BY C. Shi	CHECKED K. Cormier	

ORIGINAL SCALE IN MILLIMETERS FOR REDUCED PLANS 0 10 20 30 40 50 60 70 80 90 100

PREPARED FOR THE STATE OF CALIFORNIA DEPARTMENT OF TRANSPORTATION

R. Manzanarez
PROJECT ENGINEER

BRIDGE NO. 34-0006L/R
KILOMETER POST 13.2/13.9

CU 04
EA 0120F1

DISREGARD PRINTS BEARING EARLIER REVISION DATES

REVISION DATES (PRELIMINARY STAGE ONLY): 01/15/99 05/13/99 08/02/99 04/08/02 07/01/02 12/19/02

SHEET 472R2 OF

SAN FRANCISCO OAKLAND BAY BRIDGE
EAST SPAN SEISMIC SAFETY PROJECT
SELF-ANCHORED SUSPENSION BRIDGE
(SUPERSTRUCTURE & TOWER)

BARRIER DETAILS NO. 1

FILE => L:\BB\04-012001\SAS\Contract Plans and CCO\CCO\In Progress\CCO#44\Update 04-18-08\DGN\akbar01.dgn