DIST.	COUNTY	ROUTE	KILOMETER POST TOTAL PROJECT	SHEET NO.	TOTAL SHEETS
04	SF	80	13.2/13.9	742R2	1204

REGISTERED ENGINEER - CIVIL

12-6-04
PLANS APPROVAL DATE

REGISTERED PROFESSIONAL ENGINEER Marwan N. Nader No. C 054426 Exp. 12/31/09 CIVIL STATE OF CALIFORNIA

The State of California or its officers or agents shall not be responsible for the accuracy or completeness of electronic copies of this plan sheet.

T.Y. LIN / MOFFATT & NICHOL
825 BATTERY STREET
SAN FRANCISCO, CA 94111

Caltrans now has a web site! To get to the web site, go to: http://www.dot.ca.gov

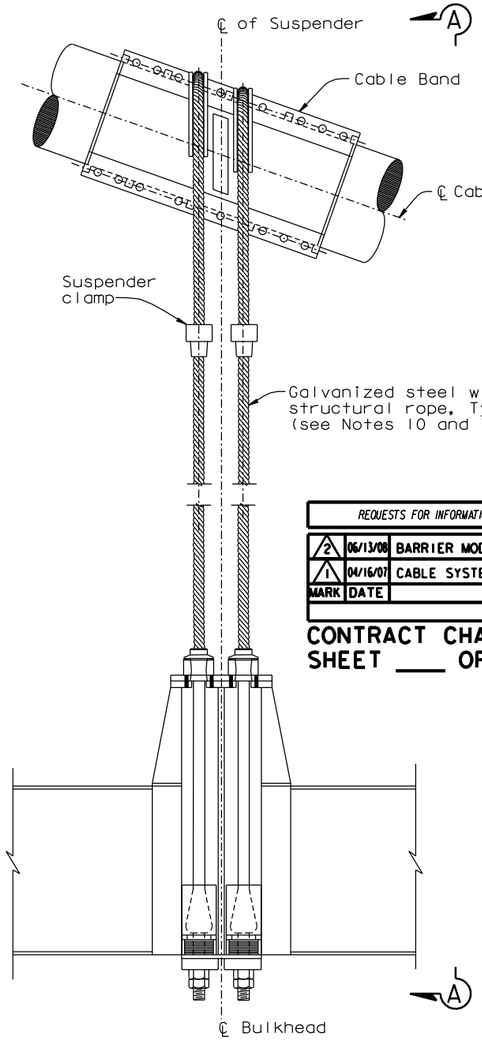

SUSPENDER TYPES 1 & 2

NTS

10. Type 1 Suspender ropes shall have a metallic area of at least 2742 mm² and a nominal diameter no greater than 78 mm. The vertical component of dead load on the four rope parts of one suspender shall be limited to 3200 kN.

11. Type 2 Suspender ropes shall have a metallic area of at least 4460 mm² and a nominal diameter no greater than 102 mm. The vertical component of dead load on the four rope parts of one suspender shall be limited to 4800 kN.

12. At locations where cable railing interferes with web PL, drilling a 10 mm Dia hole in the bracket web PL is acceptable, subject to review and approval of the Engineer. 2

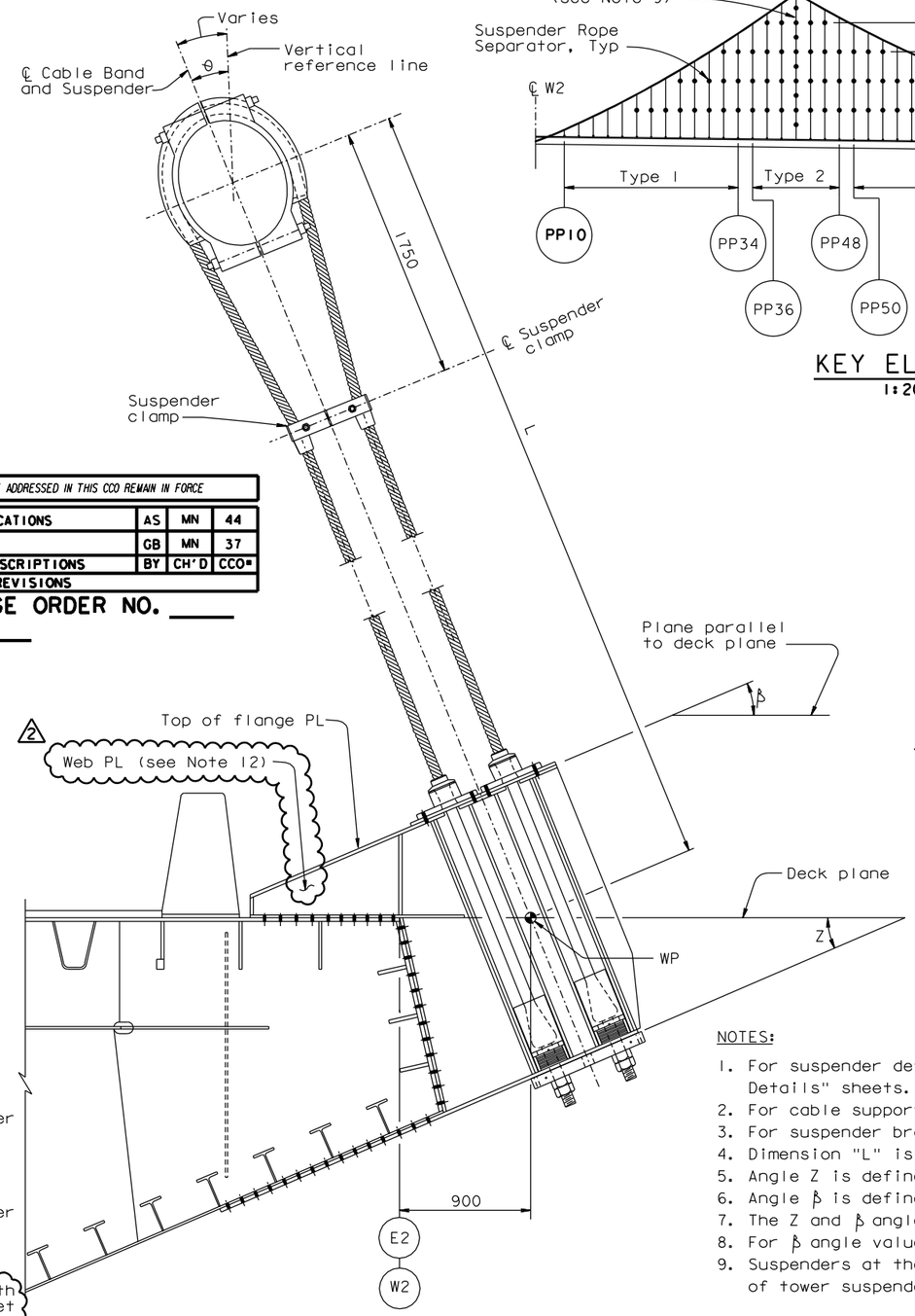

SECTION A-A (TYPICAL)

NTS

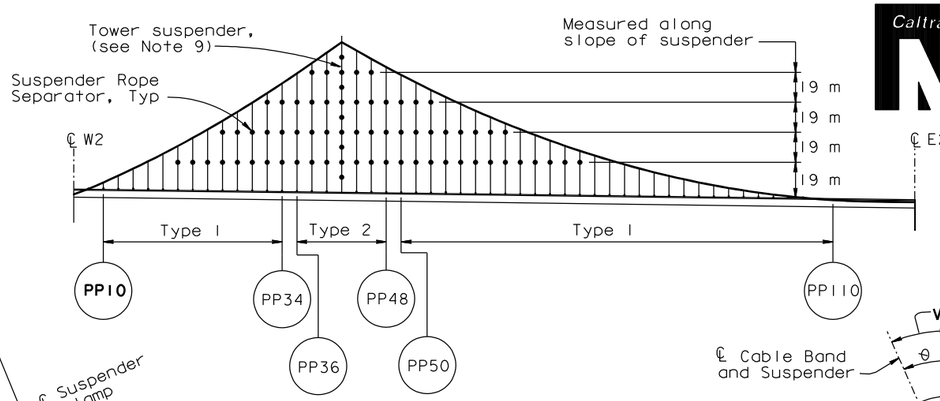

KEY ELEVATION

1:2000

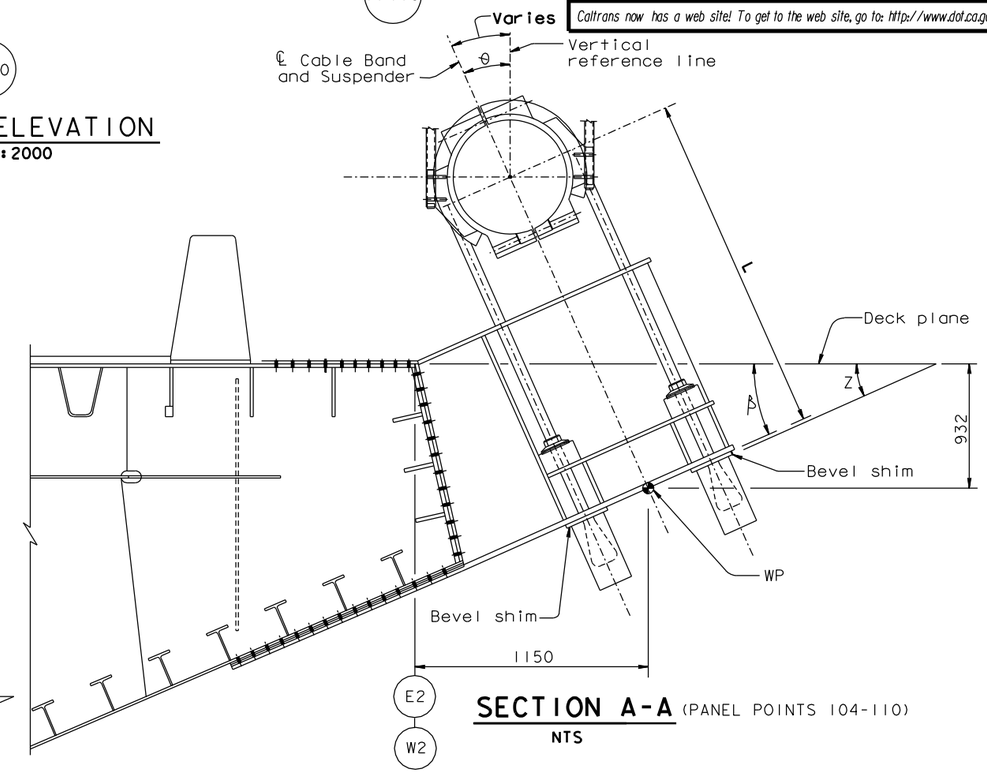

SECTION A-A (PANEL POINTS 104-110)

NTS

NOTES:

1. For suspender details, see "Suspender Assembly Details" sheets. For cable band details, see "Cable Band Details" sheets.
2. For cable support at PP 112, 114 & 116, see "Cable Bracket Details" sheets.
3. For suspender bracket details, see "Suspender Bracket Details" sheets.
4. Dimension "L" is defined as the distance between the ℄ of the cable and the WP of the suspender bracket.
5. Angle Z is defined as the angle between the deck plane and the top flange of the suspender bracket.
6. Angle β is defined as the angle between the deck plane and the top of the bevel shim.
7. The Z and β angles shall be taken as equal.
8. For β angle values, see "Suspender Bracket Details No. 3" sheet.
9. Suspenders at the tower are architectural and are substantially different from all others. For details of tower suspenders, see "Suspenders At Tower Details" sheets.

REQUESTS FOR INFORMATION NOT ADDRESSED IN THIS CCO REMAIN IN FORCE

MARK	DATE	DESCRIPTIONS	BY	CH'D	CCO#
2	06/13/08	BARRIER MODIFICATIONS	AS	MN	44
1	04/16/07	CABLE SYSTEM	GB	MN	37

REVISIONS

CONTRACT CHANGE ORDER NO. ____
SHEET ___ OF ___

ALL DIMENSIONS ARE IN MILLIMETERS UNLESS OTHERWISE SHOWN

R. Valizadeh/V. Toan/Y.L./W.L./F.C.
DESIGN OVERSIGHT
SIGN OFF DATE 06/13/08

	BY	CHECKED
DESIGN	M. Nader	S. Rodriguez
DETAILS	C. Mibelli	S. Rodriguez
QUANTITIES	C. Mibelli	G. Baker

PREPARED FOR THE STATE OF CALIFORNIA DEPARTMENT OF TRANSPORTATION

R. Manzanarez
PROJECT ENGINEER

BRIDGE NO. 34-0006L/R
KILOMETER POST 13.2/13.9

SAN FRANCISCO OAKLAND BAY BRIDGE
EAST SPAN SEISMIC SAFETY PROJECT
SELF-ANCHORED SUSPENSION BRIDGE
(SUPERSTRUCTURE & TOWER)

SUSPENDER LAYOUT NO. 1

Rev. Date: 5-18-98

ORIGINAL SCALE IN MILLIMETERS FOR REDUCED PLANS 0 10 20 30 40 50 60 70 80 90 100

CU 04
EA 0120F1

DISREGARD PRINTS BEARING EARLIER REVISION DATES

REVISION DATES (PRELIMINARY STAGE ONLY) 01/15/99 05/15/99 08/02/99 05/31/01 04/08/02 07/01/02 12/19/02

SHEET 325R2 OF

FILE => I:\bb\04-012001\sas\contract plans and cco\cco\in progress\cco#44\update 6-13-08\dgn\agsus02.dgn

USERNAME => cwinrow DATE PLOTTED => 11 JUN 2008 TIME PLOTTED => 16:15:45

100% PS&E