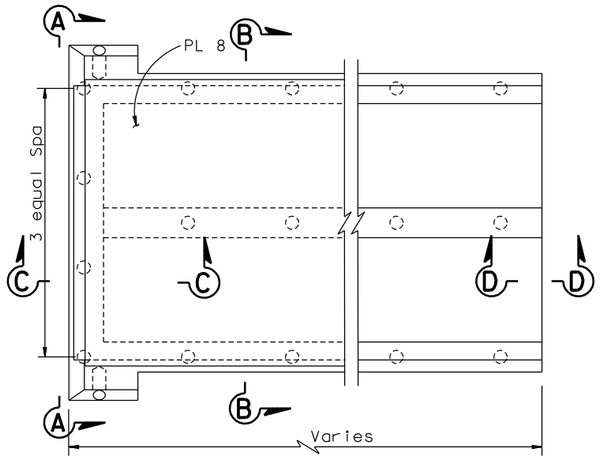

TYPE A

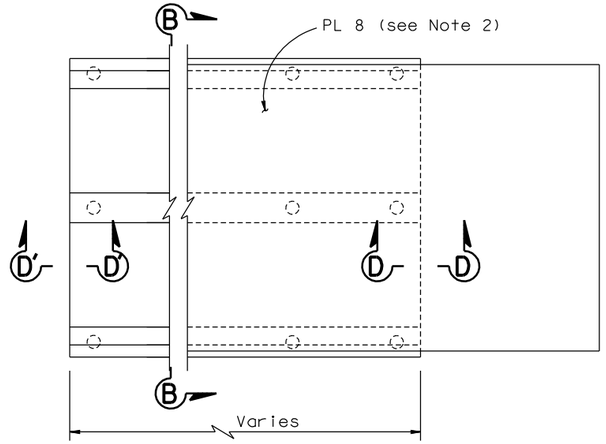

TYPE B

PLAN

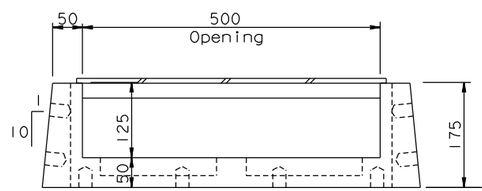

END VIEW A-A

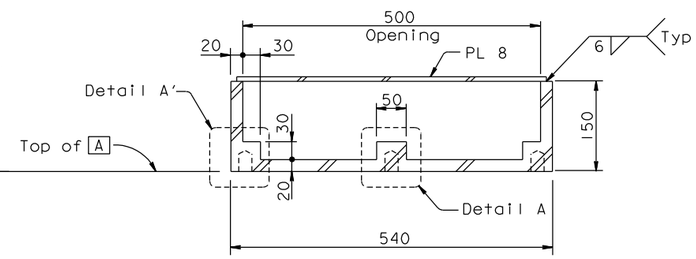

SECTION B-B

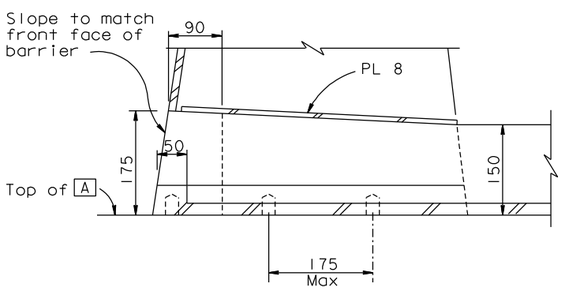

SECTION C-C

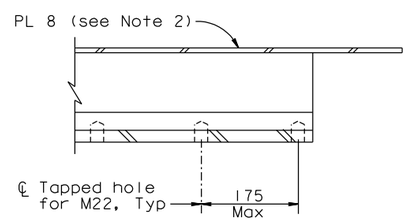

SECTION D-D (Section D'-D' similar)

BARRIER FLUME DETAILS (Drainage Type 2 only)

1:5

DRAINAGE TYPE LOCATION TABLE

See Note 1

PANEL POINT					
TYPE 1			TYPE 2		TYPE 3
W2		E5	W5	E2	E5
10	66	19	9	West of 11	16
12	68	25	12	19	22
14	70	31	18	25	28
16	72	37	23	29	34
18	74	49	25	35	46
20	76	55	30	39	52
22	78	61	35 △2	45	58
24	80	67	37	49	64
26	82	73	46	55	70
28	84	79	48	59	76
30	86	85	53	65	82
32	88	91	55	69	88
34	90	97	61	75	94
36	92	103	66	79	100
38	94	108 △2	71	85	106
40	96	115	73	89	112
42	98	117	78	95	120
44	100	124	84	99	127
46	102		89	105	
48	104		91	111	
50	106		96	115	
52	110		101	116	
54	112		103	117	
56	114		107 △2	123	
58	116		113	125	
60	118		116	127	
62			117	128	
64			120.5		
			121		
			122		
			123		
			123.5		
			124		
			127		
			127.5		
			128		

Caltrans Metric

DIST.	COUNTY	ROUTE	KILOMETER POST TOTAL PROJECT	SHEET NO.	TOTAL SHEETS
04	SF	80	13.2/13.9	878R2	1204

George Baker
REGISTERED ENGINEER - CIVIL

12-6-04
PLANS APPROVAL DATE

REGISTERED PROFESSIONAL ENGINEER George S. Baker No. C57112 Exp. 12/31/05 CIVIL STATE OF CALIFORNIA

The State of California or its officers or agents shall not be responsible for the accuracy or completeness of electronic copies of this plan sheet.

T.Y. LIN / MOFFATT & NICHOL
825 BATTERY STREET
SAN FRANCISCO, CA 94111

Caltrans now has a web site! To get to the web site, go to: http://www.dot.ca.gov

Daniel J. Turner

REGISTERED PROFESSIONAL ENGINEER Daniel J. Turner No. C 65033 Exp. 06/30/09 CIVIL STATE OF CALIFORNIA

FOR REVISIONS ONLY

REQUESTS FOR INFORMATION NOT ADDRESSED IN THIS CCO REMAIN IN FORCE

MARK	DATE	DESCRIPTIONS	BY	CH'D	CCO#
△2	06/13/08	BARRIER MODIFICATIONS	GB	DT	44
△1	08/24/07	BARRIER MODIFICATIONS	GB	DT	44

REVISIONS

CONTRACT CHANGE ORDER NO. ____
SHEET ___ OF ___

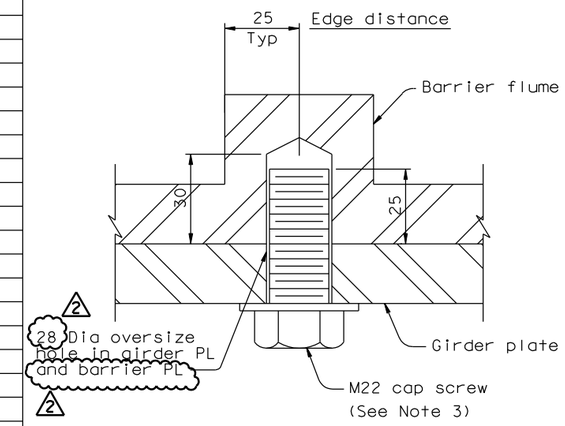

DETAIL A (A' Similar)

1:1

NOTES:

1. Drainage types 1, 2 and 3 are located to the nearest working line indicated. Types 2 and 3 are located east of the panel point unless noted otherwise. Type 1 is located west of panel point.
2. For the extent of PL 8 at Type B Flume, see Section B-B, "Deck Drainage Details No.2" sheet.
3. △2 Cap screws shall be galvanized A307 bolts and shall be used with a thread locking system.

ALL DIMENSIONS ARE IN MILLIMETERS UNLESS OTHERWISE SHOWN

R. Valizadeh/V. Toan/Y.L./W.L./F.C.
DESIGN OVERSIGHT
Roya Valizadeh / Vong Toan / Y. Liu
SIGN OFF DATE 06/13/08

Rev. Date: 5-18-98

	BY	CHECKED
DESIGN	G. Baker	T. Ho
DETAILS	D. Turner	T. Ho
QUANTITIES	G. Baker	D. Harrison

PREPARED FOR THE STATE OF CALIFORNIA DEPARTMENT OF TRANSPORTATION

R. Manzanarez
PROJECT ENGINEER

CU 04
EA 0120F1

BRIDGE NO. 34-0006L/R
KILOMETER POST 13.2/13.9

SAN FRANCISCO OAKLAND BAY BRIDGE
EAST SPAN SEISMIC SAFETY PROJECT
SELF-ANCHORED SUSPENSION BRIDGE
(SUPERSTRUCTURE & TOWER)

DECK DRAINAGE DETAIL NO. 3

ORIGINAL SCALE IN MILLIMETERS FOR REDUCED PLANS 0 10 20 30 40 50 60 70 80 90 100

DISREGARD PRINTS BEARING EARLIER REVISION DATES

REVISION DATES (PRELIMINARY STAGE ONLY) 05/15/99 08/02/99 05/31/01 04/08/02 07/01/02 12/19/02

SHEET 46 OF IR2

FILE => I:\bb\04-012001\sas\contract plans and cco\cco\in progress\cco#44\revised 8-25-08\dgn\akdkd03.dgn

USERNAME => dwinrow DATE PLOTTED => 27 AUG 2008 TIME PLOTTED => 14:25:10

100 % PS&E