DIST.	COUNTY	ROUTE	KILOMETER POST TOTAL PROJECT	SHEET NO.	TOTAL SHEETS
04	SF	80	13.2/13.9	905R3	1204

REGISTERED ENGINEER - CIVIL

12-6-04
PLANS APPROVAL DATE

REGISTERED PROFESSIONAL ENGINEER Tien Hung Ho No. C 43990 Exp. 06/30/09 CIVIL STATE OF CALIFORNIA

The State of California or its officers or agents shall not be responsible for the accuracy or completeness of electronic copies of this plan sheet.

T.Y. LIN / MOFFATT & NICHOL
825 BATTERY STREET
SAN FRANCISCO, CA 94111

Caltrans now has a web site! To get to the web site, go to: http://www.dot.ca.gov

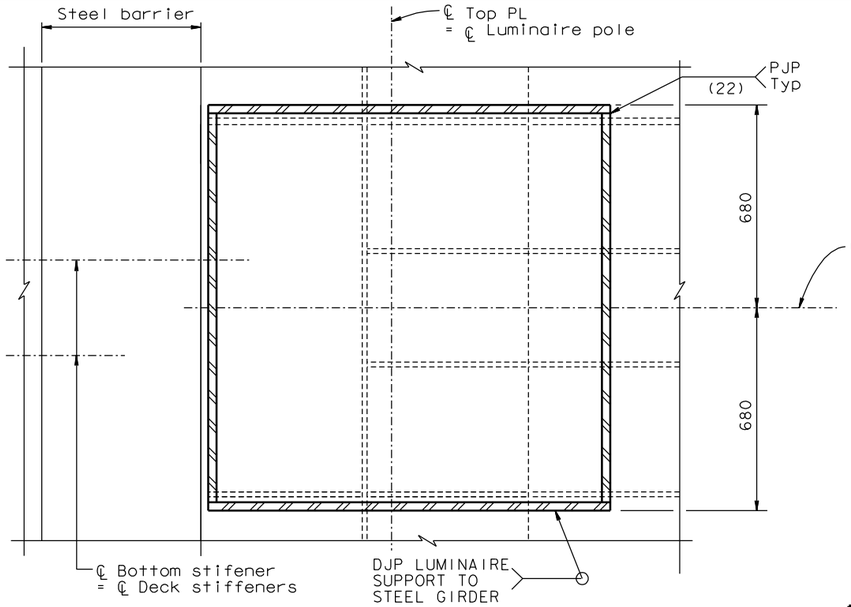

SECTION B-B
1:10

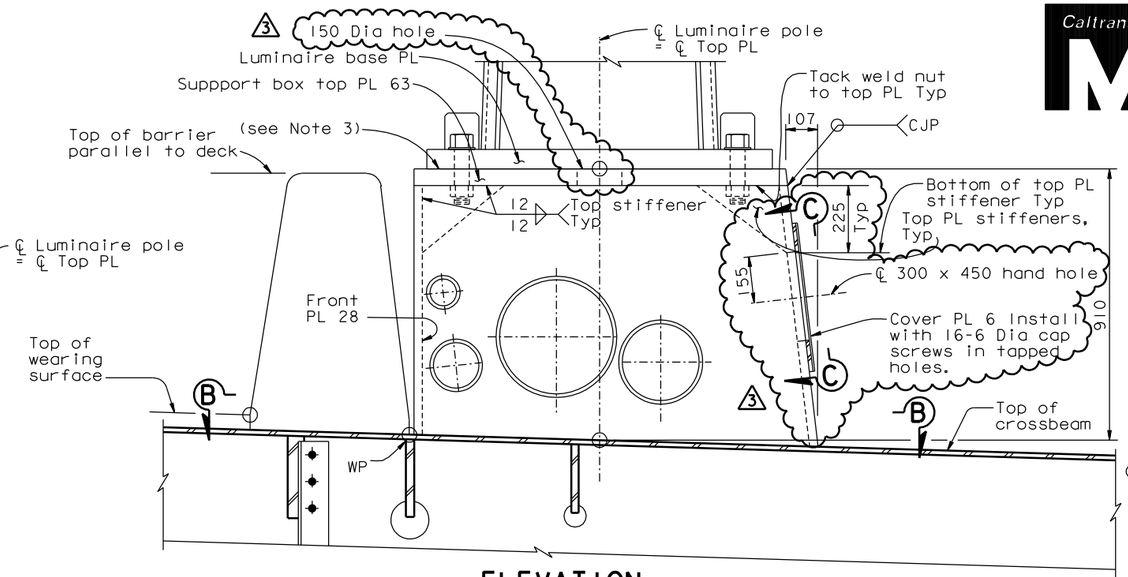

ELEVATION (OVER CROSSBEAM, WB shown, EB similar)
WELDED LUMINAIRE SUPPORT BOX
1:10

NOTES:

1. For dimensions and details not shown, see "Luminaire Support Details No.1" sheet.
2. Anchor rods at the base PL connection shall be tensioned to 0.5Fy.
3. Surfaces of plates shall be milled level to ensure bearing.
4. For View C-C and Typical Drain Hole Detail, see "Luminaire Support Details No.1" sheet. 3
5. The Contractor shall submit for approval by the Engineer details of conduit penetration through deck plate. Conduit penetration details shall be completely sealed to ensure no water leakage into support box.
6. For location of luminaire, see "Road Plans" sheets.
7. For geometry of luminaire base plate, conduit openings and location of bolts, see "Road Plans".
8. All reinforcement in concrete luminaire support shall be epoxy coated.
9. At locations where cable railing interferes with luminaire support box, terminate railing at eye bolts, each side of support box, subject to review and approval of the Engineer. 3

MARK	DATE	DESCRIPTIONS	BY	CH'D	CCO#
3	06/13/08	BARRIER MODIFICATIONS	TH	JD	44
2	08/24/07	BARRIER MODIFICATIONS	TH	JD	44
1	07/21/06	W2 CAP BEAM ISD	JD	NV	23

REQUESTS FOR INFORMATION NOT ADDRESSED IN THIS CCO REMAIN IN FORCE

REVISIONS

CONTRACT CHANGE ORDER NO. ___
SHEET ___ OF ___

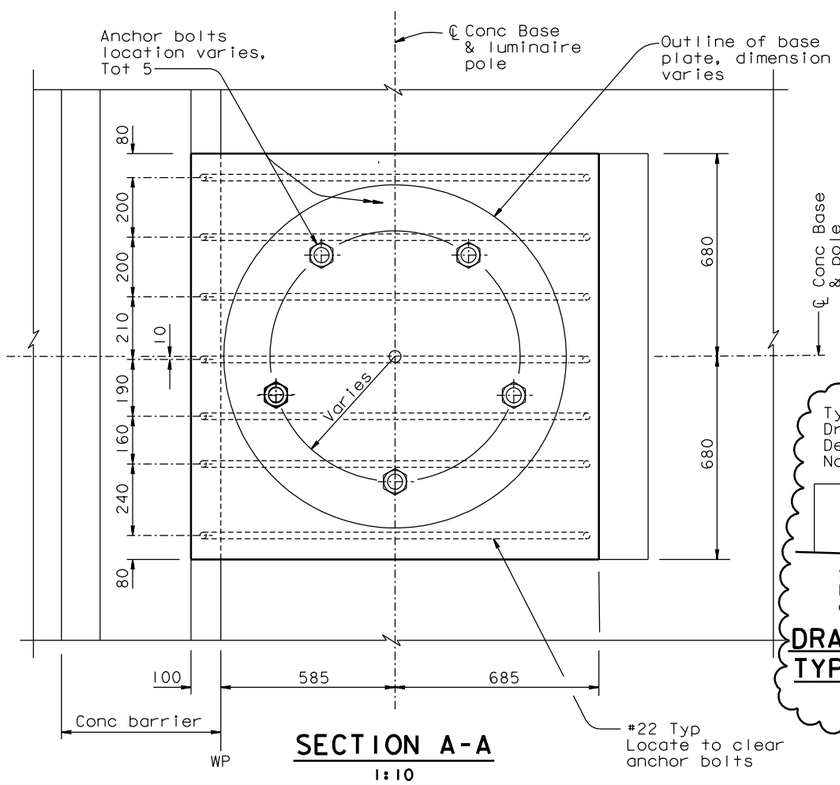

SECTION A-A
1:10

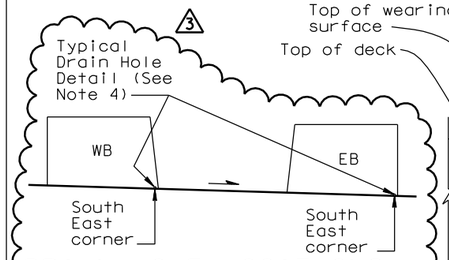

DRAIN HOLE LOCATIONS @ TYPICAL LUMINAIRE AND SIGN SUPPORT BOX
NTS

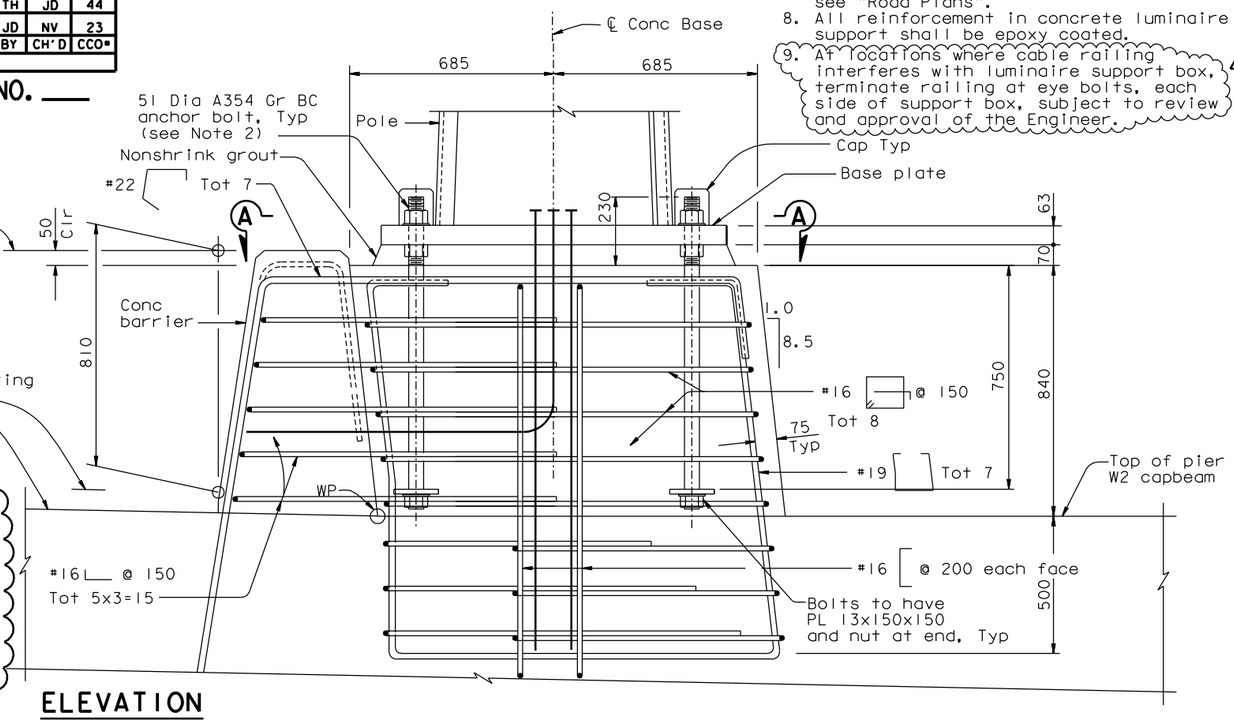

ELEVATION
CONCRETE LUMINAIRE SUPPORT
1:10

ALL DIMENSIONS ARE IN MILLIMETERS UNLESS OTHERWISE SHOWN

R. Valizadeh/V. Toan/Y.L./W.L./F.C.
DESIGN OVERSIGHT
SIGN OFF DATE 06/13/08

DESIGN	BY T. Ho	CHECKED	C. Redfield
DETAILS	BY R. Xu	CHECKED	C. Redfield
QUANTITIES	BY C. Mauch	CHECKED	K. Cormier

PREPARED FOR THE STATE OF CALIFORNIA DEPARTMENT OF TRANSPORTATION

R. Manzanarez
PROJECT ENGINEER

BRIDGE NO. 34-0006L/R
KILOMETER POST 13.2/13.9

SAN FRANCISCO OAKLAND BAY BRIDGE
EAST SPAN SEISMIC SAFETY PROJECT
SELF-ANCHORED SUSPENSION BRIDGE
(SUPERSTRUCTURE & TOWER)

LUMINAIRE SUPPORT DETAILS NO. 2

Rev. Date: 5-18-98

ORIGINAL SCALE IN MILLIMETERS FOR REDUCED PLANS 0 10 20 30 40 50 60 70 80 90 100

CU 04
EA 0120F1

DISREGARD PRINTS BEARING EARLIER REVISION DATES

REVISION DATES (PRELIMINARY STAGE ONLY) 05/14/01 04/08/02 07/09/02 12/19/02 11/13/05

SHEET 488R3 OF

FILE => I:\bb\04-01200I\sas\contract plans and cco\cco\in progress\cco#44\revised 8-25-08\dgn\akIht08a.dgn

100% PS&E

USERNAME => dwinrow DATE PLOTTED => 27 AUG 2008 TIME PLOTTED => 14:28:02