| DIST. | COUNTY | ROUTE | KILOMETER POST TOTAL PROJECT | SHEET NO. | TOTAL SHEETS |
|---|---|---|---|---|---|
| 04 | SF | 80 | 13.2/13.9 | 878R2 | 1204 |

Caltrans Metric

George Baker
REGISTERED ENGINEER - CIVIL
12-6-04
PLANS APPROVAL DATE

REGISTERED PROFESSIONAL ENGINEER George S. Baker No. C57112 Exp. 12/31/05 CIVIL STATE OF CALIFORNIA

The State of California or its officers or agents shall not be responsible for the accuracy or completeness of electronic copies of this plan sheet.

T.Y. LIN / MOFFATT & NICHOL
825 BATTERY STREET
SAN FRANCISCO, CA 94111

Caltrans now has a web site! To get to the web site, go to: http://www.dot.ca.gov

Daniel J. Turner

REGISTERED PROFESSIONAL ENGINEER Daniel J. Turner No. C 65033 Exp. 06/30/09 CIVIL STATE OF CALIFORNIA

FOR REVISIONS ONLY

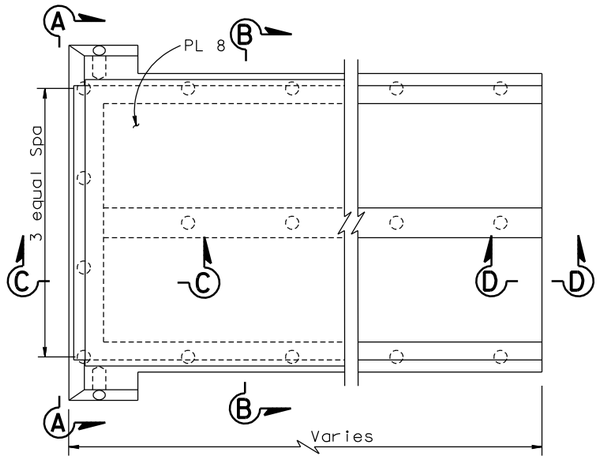


TYPE A

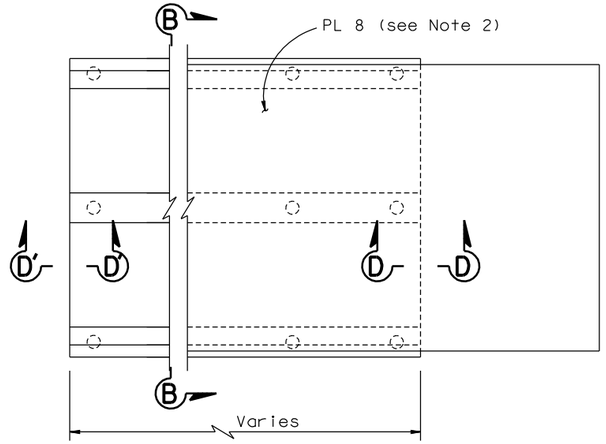


TYPE B

## PLAN

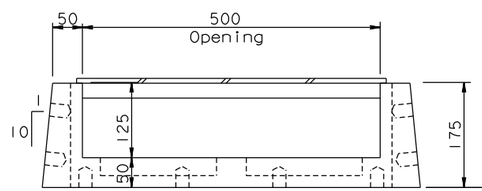


## END VIEW A-A

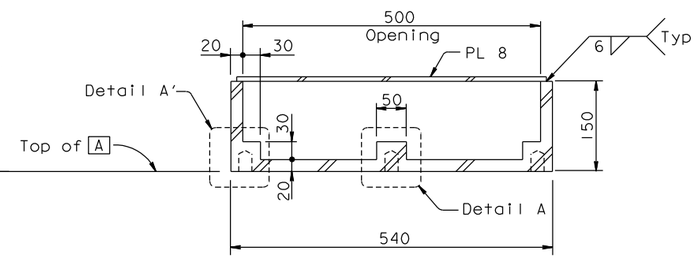


## SECTION B-B

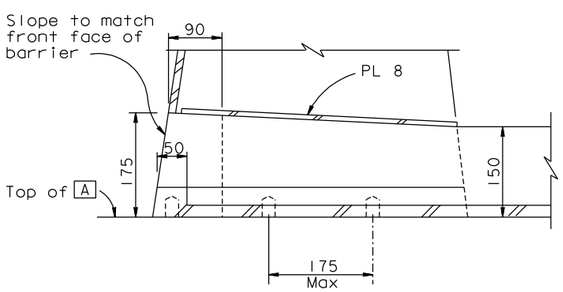


## SECTION C-C

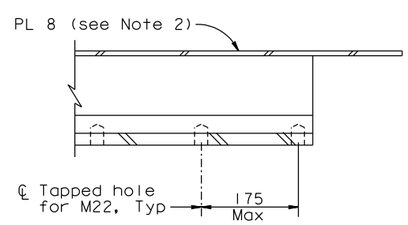


## SECTION D-D (Section D'-D' similar)

## BARRIER FLUME DETAILS (Drainage Type 2 only)

1:5

## DRAINAGE TYPE LOCATION TABLE

See Note 1

| PANEL POINT | | | | | |
|---|---|---|---|---|---|
| TYPE 1 | | | TYPE 2 | | TYPE 3 |
| W2 | | E5 | W5 | E2 | E5 |
| 10 | 66 | 19 | 9 | West of 11 | 16 |
| 12 | 68 | 25 | 12 | 19 | 22 |
| 14 | 70 | 31 | 18 | 25 | 28 |
| 16 | 72 | 37 | 23 | 29 | 34 |
| 18 | 74 | 49 | 25 | 35 | 46 |
| 20 | 76 | 55 | 30 | 39 | 52 |
| 22 | 78 | 61 | 35 | 45 | 58 |
| 24 | 80 | 67 | 37 | 49 | 64 |
| 26 | 82 | 73 | 46 | 55 | 70 |
| 28 | 84 | 79 | 48 | 59 | 76 |
| 30 | 86 | 85 | 53 | 65 | 82 |
| 32 | 88 | 91 | 55 | 69 | 88 |
| 34 | 90 | 97 | 61 | 75 | 94 |
| 36 | 92 | 103 | 66 | 79 | 100 |
| 38 | 94 | 108 | 71 | 85 | 106 |
| 40 | 96 | 115 | 73 | 89 | 112 |
| 42 | 98 | 117 | 78 | 95 | 120 |
| 44 | 100 | 124 | 84 | 99 | 127 |
| 46 | 102 | | 89 | 105 | |
| 48 | 104 | | 91 | 111 | |
| 50 | 106 | | 96 | 115 | |
| 52 | 110 | | 101 | 116 | |
| 54 | 112 | | 103 | 117 | |
| 56 | 114 | | 107 | 123 | |
| 58 | 116 | | 113 | 125 | |
| 60 | 118 | | 116 | 127 | |
| 62 | | | 117 | 128 | |
| 64 | | | 120.5 | | |
| | | | 121 | | |
| | | | 122 | | |
| | | | 123 | | |
| | | | 123.5 | | |
| | | | 124 | | |
| | | | 127 | | |
| | | | 127.5 | | |
| | | | 128 | | |

REQUESTS FOR INFORMATION NOT ADDRESSED IN THIS CCO REMAIN IN FORCE

| MARK | DATE | DESCRIPTIONS | BY | CH'D | CCO# |
|---|---|---|---|---|---|
| 2 | 06/13/08 | BARRIER MODIFICATIONS | GB | DT | 44 |
| 1 | 08/24/07 | BARRIER MODIFICATIONS | GB | DT | 44 |

REVISIONS

CONTRACT CHANGE ORDER NO. ____
SHEET ___ OF ___

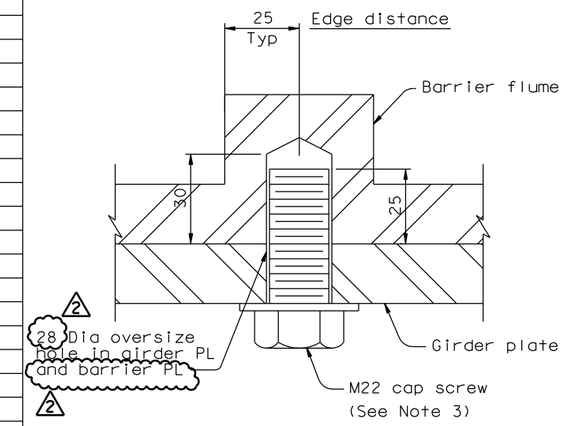


## DETAIL A (A' Similar)

1:1

NOTES:

1. Drainage types 1, 2 and 3 are located to the nearest working line indicated. Types 2 and 3 are located east of the panel point unless noted otherwise. Type 1 is located west of panel point.
2. For the extent of PL 8 at Type B Flume, see Section B-B, "Deck Drainage Details No.2" sheet.
3. Cap screws shall be galvanized A307 bolts and shall be used with a thread locking system.

ALL DIMENSIONS ARE IN MILLIMETERS UNLESS OTHERWISE SHOWN

R. Valizadeh/V. Toan/Y.L./W.L./F.C.
DESIGN OVERSIGHT
Roya Valizadeh / Vong Toan / Y. Liu
SIGN OFF DATE 06/13/08

| | | | |
|---|---|---|---|
| DESIGN | BY G. Baker | CHECKED T. Ho | |
| DETAILS | BY D. Turner | CHECKED T. Ho | |
| QUANTITIES | BY G. Baker | CHECKED D. Harrison | |

PREPARED FOR THE STATE OF CALIFORNIA DEPARTMENT OF TRANSPORTATION

R. Manzanarez
PROJECT ENGINEER

CU 04
EA 0120F1

BRIDGE NO. 34-0006L/R
KILOMETER POST 13.2/13.9

SAN FRANCISCO OAKLAND BAY BRIDGE
EAST SPAN SEISMIC SAFETY PROJECT
SELF-ANCHORED SUSPENSION BRIDGE
(SUPERSTRUCTURE & TOWER)

# DECK DRAINAGE DETAIL NO. 3

Rev. Date: 5-18-98

ORIGINAL SCALE IN MILLIMETERS FOR REDUCED PLANS 0 10 20 30 40 50 60 70 80 90 100

DISREGARD PRINTS BEARING EARLIER REVISION DATES

REVISION DATES (PRELIMINARY STAGE ONLY) 05/15/99 08/02/99 05/31/01 04/08/02 07/01/02 12/19/02

SHEET 46IR2 OF

FILE => L:\BB\04-012001\SAS\Contract Plans and CCO\CCO\In Progress\CCO#44\UPDATE 6-13-08\DGN\akdkd03.dgn

USERNAME => \vignatovs DATE PLOTTED => 03 JUL 2008 TIME PLOTTED => 10:13:47

100 % PS&E