DIST	COUNTY	ROUTE	KILOMETER POST TOTAL PROJECT	SHEET No	TOTAL SHEETS
04	SF	80	13.2/13.9	130 R1	1204

REGISTERED ELECTRICAL ENGINEER 12/19/02 DATE

12-6-04
PLANS APPROVAL DATE

REGISTERED PROFESSIONAL ENGINEER JENS ERLINGSSON No. 8249 Exp. 9/30/06 ELECTRICAL STATE OF CALIFORNIA

PB POWER, Inc.
A Parsons Brinckerhoff Company
303 Second St., Suite 700N
San Francisco, CA 94107-1317

The State of California or its officers or agents shall not be responsible for the accuracy or completeness of electronic copies of this plan sheet.

Caltrans now has a web site! To get to the web site, go to http://www.dot.ca.gov

Caltrans Metric

UTILITY PANEL UP-108 (CKT #1099)

Location: SAS SUPERSTRUCTURE SERVICE PLATFORM 8

LOAD DESCRIPTION	LTG	REC	OTH.	CB		CB	LTG	REC	OTH.	LOAD DESCRIPTION
Recept (1) Westbound North Barrier		180		20/1	1 A 2	20/1			10	CB-143A
Recept (3) Westbound South Barrier		540		20/1	3 B 4	20/1			10 △1	CB-143B 1
Recept (2) Service Platform #8		360		20/1	5 C 6	20/1				Spare
Recept (3) Girder		540		20/1	7 A 8	20/1	984			Girder Ltg. (24)
Recept (6) Crossbeams		1080		20/1	9 B 10	20/1	738			Crossbeam Ltg (20)
RTU #11W (Lighting & Receptacle)	105	180	150	20/1	11 C 12	20/1	820			Crossbeam Ltg (20)
Recept (1) Crossbeams		180		20/1	13 A 14	20/1				Spare
Spare				20/1	15 B 16	20/1				Spare
RTU #11W (PLC Power Supply)			100	20/1	17 C 18	20/1				
Spare				20/1	19 A 20	20/1				
				20/1	21 B 22	20/1				
				20/1	23 C 24	20/1				
TOTAL VA	105	3060	250				2542	△1	20	TOTAL VA

LOAD SUMMARY (INCLUDES .90 PF) (VA)

Lighting (At 100%): 2647
Gen Use (1st 10 kVA AT 100% Plus 50% of remainder): 3350

TOTAL kVA: 5.977 △1

BALANCE (kVA)

Phase A - 1.884 △1
Phase B - 2.358
Phase C - 1.715

VOLTAGE: 208Y/120 V
PHASE/WIRES: 3-phase, 4-wire
BUS RATING: 100 A
MAIN: 60 A
MOUNTING: Surface
K.A.I.C.: 10

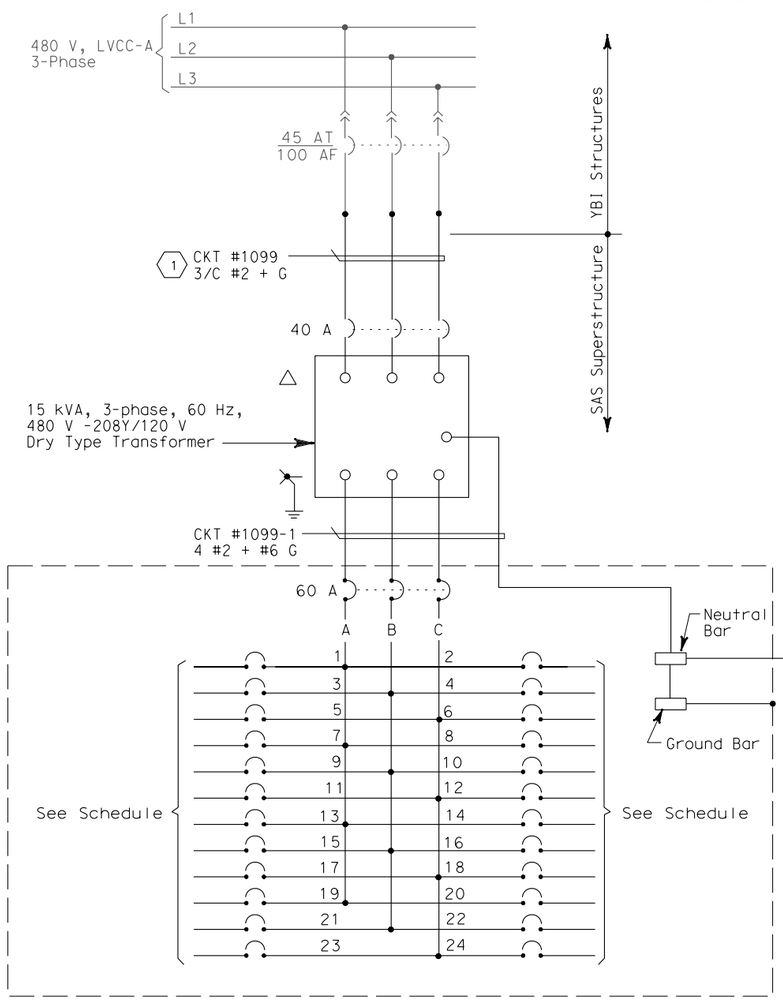

NOTES:

1. The Contractor shall provide nameplates and circuit schedules as shown.
2. Install transformer/panelboard inside a PB-8A enclosure (fiberglass) to be sized by the Contractor.
3. References:
   - For circuit and conduit/cable tray schedules, see sheets starting at E-401.
   - For pull box schedule, see sheet E-83.
   - For crossbeam lighting plan, see sheet E-119.

SHEET NOTES:

1. The Contractor shall extend and coil 5 meters of cable in manhole 25. All cables shall be tagged with circuit numbers as shown. For location of manhole 25, see sheet E-11.

REVISED BY	DATE REVISED
EJL	2/04

CALCULATED/DESIGNED BY	DATE 08/01
JP	11/01
CHECKED BY	BL

DESIGN OVERSIGHT
BEHZAD GOLEMOHAMMADI

STATE OF CALIFORNIA - DEPARTMENT OF TRANSPORTATION
Caltrans

REGISTERED PROFESSIONAL ENGINEER S. A. ESTOQUE, JR. No. E-10151 Exp. 12/31/2008 ELECTRICAL STATE OF CALIFORNIA

FOR REVISION ONLY

REQUEST FOR INFORMATION NOT ADDRESSED IN THIS CCO REMAIN IN FORCE

MARK	DATE	DESCRIPTIONS	BY	CH'D	CCO#
△1	03/04/08	BARRIER MODIFICATIONS	JS BM	RG SE	44

REVISIONS

CONTRACT CHANGE ORDER NO. _____
SHEET _____ OF _____

THIS PLAN IS ACCURATE FOR ELECTRICAL WORK ONLY.

DETAILS
SAS SUPERSTRUCTURE ROADWAY WESTBOUND PANEL UP-108 SCHEDULE
NO SCALE

E-63

LAST REVISION 00-00-00
DATE PLOTTED => 4/18/2008
TIME PLOTTED => 1:54:49 PM

FOR REDUCED PLANS ORIGINAL SCALE IS IN MILLIMETERS 0 20 40 60 80

DGN FILE =>T:\13103\MS\pse\SAS Struc\CCO\SAS CCO44\04-0120f1_0130R01.dgn
USERNAME =>llorico

CU 04251 EA 0120F1