DIST	COUNTY	ROUTE	KILOMETER POST TOTAL PROJECT	SHEET No	TOTAL SHEETS
04	SF	80	13.2/13.9	312 R1	1204

REGISTERED ELECTRICAL ENGINEER 12/19/02 DATE

12-6-04
PLANS APPROVAL DATE

REGISTERED PROFESSIONAL ENGINEER JENS ERLINGSSON No. 8249 Exp. 9/30/06 ELECTRICAL STATE OF CALIFORNIA

PB POWER, Inc.
A Parsons Brinckerhoff Company
303 Second St., Suite 700N
San Francisco, CA 94107-1317

The State of California or its officers or agents shall not be responsible for the accuracy or completeness of electronic copies of this plan sheet.

Caltrans now has a web site! To get to the web site, go to http://www.dot.ca.gov

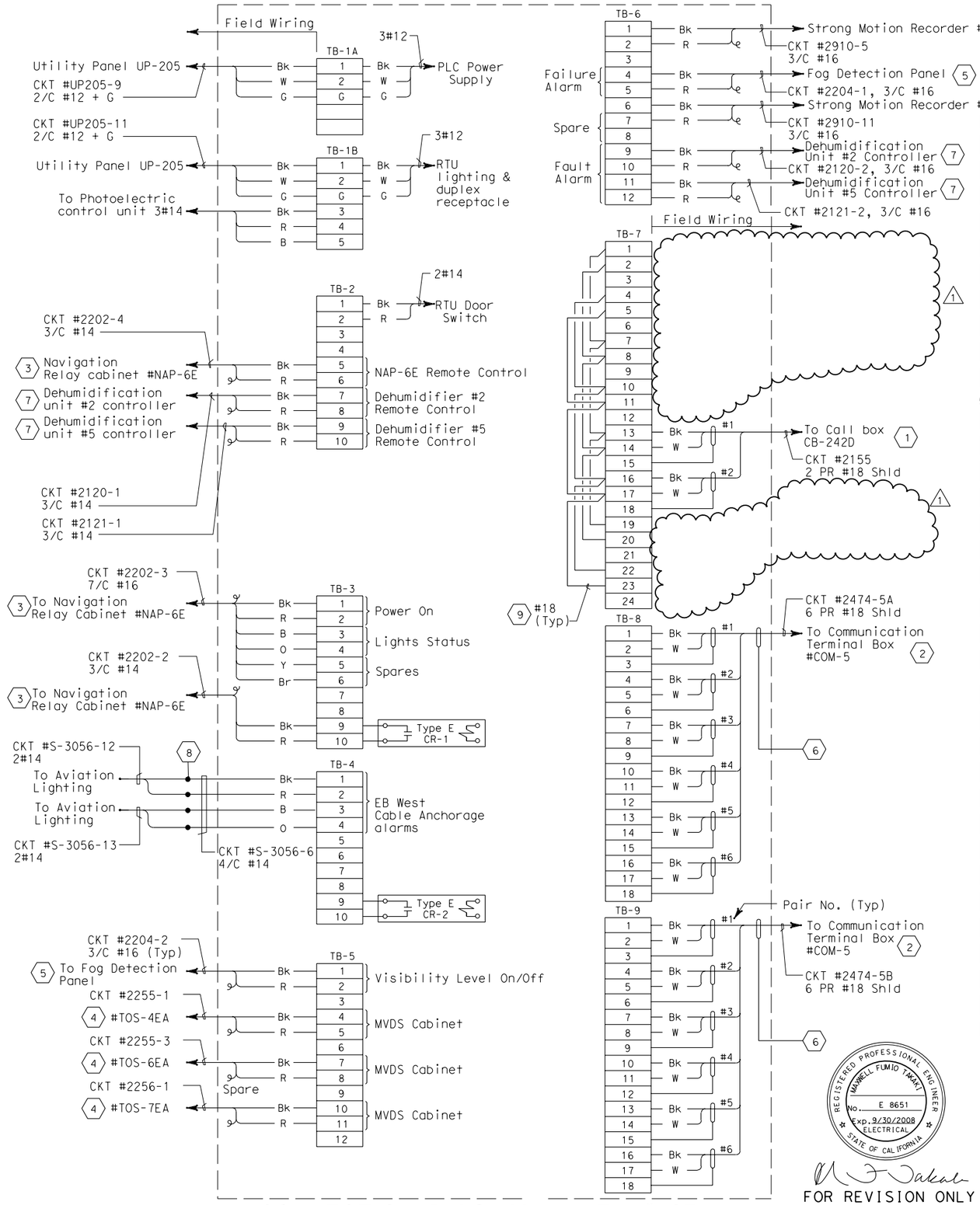

CONNECTION DIAGRAM - RTU #10E

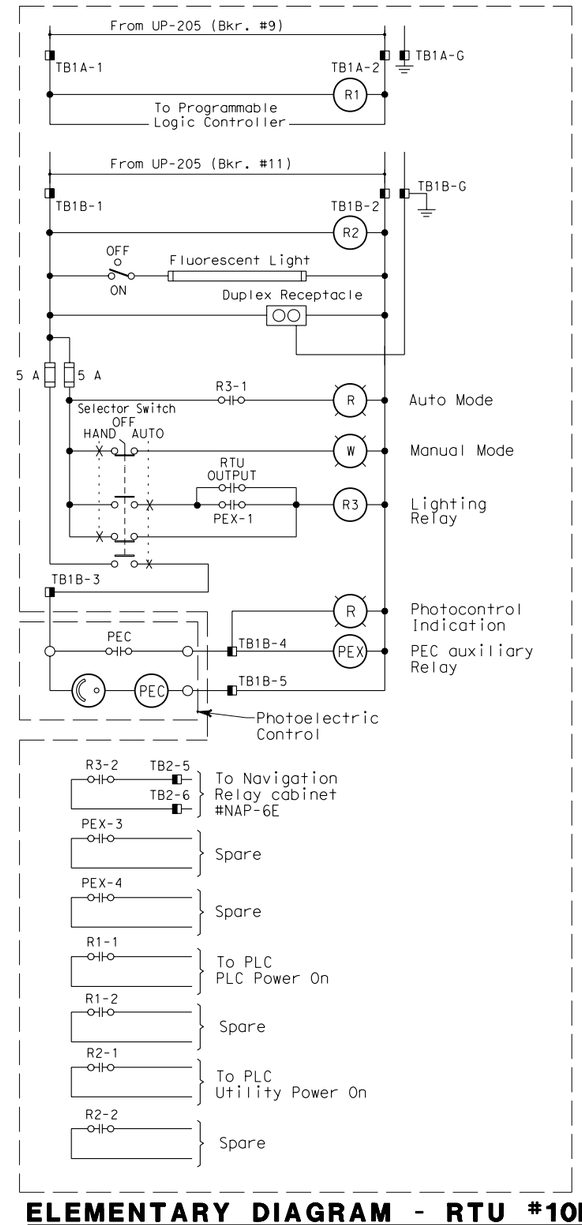

ELEMENTARY DIAGRAM - RTU #10E

(Navigation Lighting System)

SHEET NOTES:

1. For connection diagram to call boxes, see sheet E-399.
2. For connection diagram to scada system, see sheet E-325.
3. For connection diagram to navigation system, see sheet E-303.
4. Connections to panel door switch. For remote alarm status to RTU.
5. For connection diagram to fog detection panel, see sheet E-300.
6. Field to tape cable overall shield wire.
7. For connection diagram to dehumidification controllers, see sheet E-79.
8. Conductors spliced inside junction box PB-2A located inside the girder.
9. The Contractor shall install resistors, approximately equal to the impedance (Zo) of the twised pairs, at the extreme ends of the multidrop network.

NOTES:

1. All spare conductors shall be coiled and taped at conductor ends unless terminated.
2. Terminate cable shields to low level ground bus.
3. References:
   - For UP-205 panel schedule, see sheet E-151.
   - For navigation system elementary diagram, see sheet E-299.
   - For RTU #10E panel layout, see sheet E-320.
   - For circuit and conduit/cable tray schedules, see sheets starting at E-401.
   - For strong motion detection system cable block diagrams, see sheets E-383 and E-384.

REQUEST FOR INFORMATION NOT ADDRESSED IN THIS CCO REMAIN IN FORCE

MARK	DATE	DESCRIPTIONS	BY	CH'D	CCO#
1	03/04/08	BARRIER MODIFICATIONS	JS BM	RG SE	44

REVISIONS

CONTRACT CHANGE ORDER NO._____
SHEET_____ OF _____

REGISTERED PROFESSIONAL ENGINEER MANNELL FUMIO TAKAKI No. E 8651 Exp. 9/30/2008 ELECTRICAL STATE OF CALIFORNIA

FOR REVISION ONLY

DETAILS
SCADA REMOTE TERMINAL UNIT SYSTEM
RTU #10E ELEMENTARY AND CONNECTION DIAGRAM

NO SCALE

E-331

DATE	BY	CALCULATED/ DESIGNED BY	CHECKED BY	REVISED BY	DATE REVISED
10/01	EDC	JL			

DESIGN OVERSIGHT
BEHZAD GOLEMOHAMMADI

STATE OF CALIFORNIA - DEPARTMENT OF TRANSPORTATION
Caltrans

THIS PLAN IS ACCURATE FOR ELECTRICAL WORK ONLY.

FOR REDUCED PLANS ORIGINAL SCALE IS IN MILLIMETERS 0 20 40 60 80

DGN FILE =>t:\13103\MS\pse\SAS Struc\CCO\SAS CCO44\04-0120f1_0312R01.dgn
USERNAME =>llorico

CU 04251 EA 0120F1

LAST REVISION 00-00-00
DATE PLOTTED => 3/4/2008
TIME PLOTTED => 9:25:31 AM