DIST	COUNTY	ROUTE	KILOMETER POST TOTAL PROJECT	SHEET No.	TOTAL SHEETS
04	SF	80	13.2/13.9	131 STRO	1204

REGISTERED ELECTRICAL ENGINEER 9/18/2007 DATE

PLANS APPROVAL DATE

REGISTERED PROFESSIONAL ENGINEER MAXWELL FUMIO TAKAKI No. E 8651 Exp. 9/30/2008 ELECTRICAL STATE OF CALIFORNIA

PB POWER, Inc.
A Parsons Brinckerhoff Company
303 Second St., Suite 700N
San Francisco, CA 94107-1317

The State of California or its officers or agents shall not be responsible for the accuracy or completeness of electronic copies of this plan sheet.

Caltrans now has a web site! To get to the web site, go to http://www.dot.ca.gov

FOR REVISION ONLY

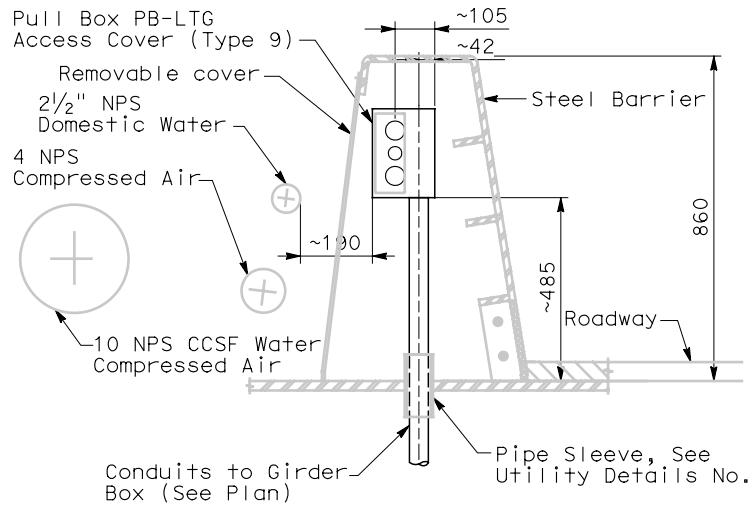

SECTION B-B

TYPICAL PULL BOX PB-LTG AND CONDUIT LOCATION (W5)
SCALE 1:10
(W2) (SIMILAR)

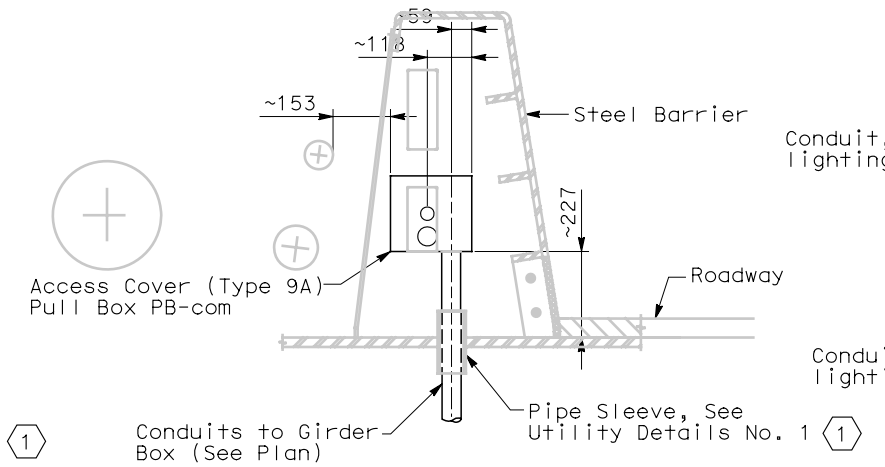

SECTION C-C

TYPICAL PULL BOX PB-COM AND CONDUIT LOCATION (W5)
SCALE 1:10
(W2) (SIMILAR)

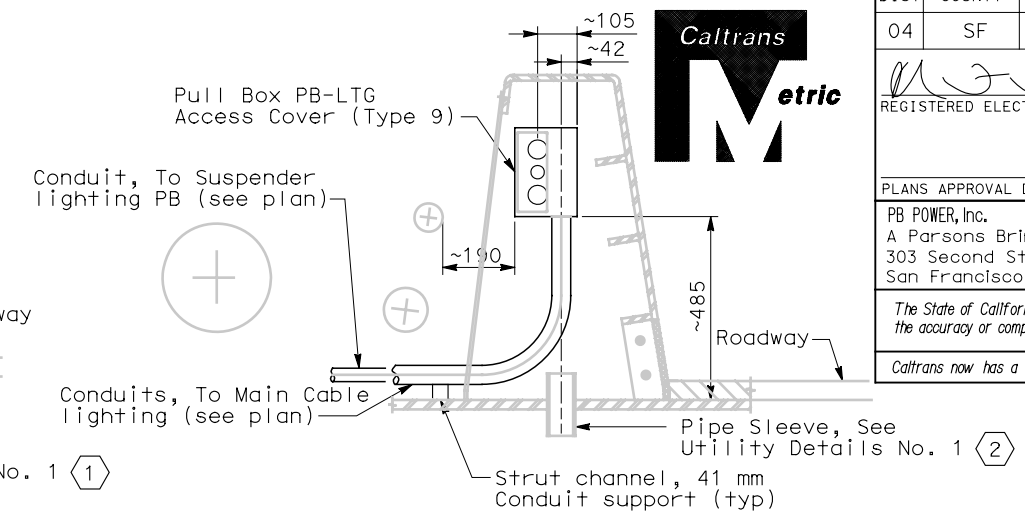

DETAIL 6

TYPICAL CONDUIT LOCATION FROM PULL BOX PB-LTG TO SUSPENDER AND MAIN CABLE LIGHTING (W5)
SCALE 1:10
(W2) (SIMILAR)

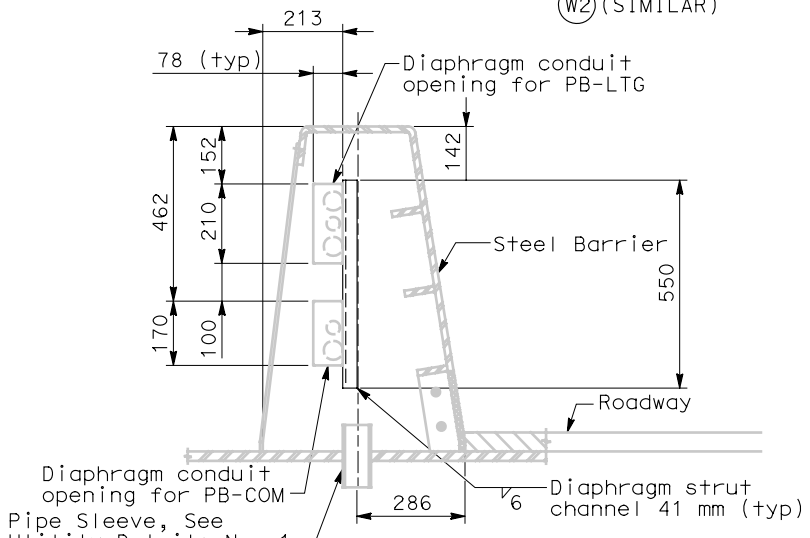

DETAIL 1

TYPICAL CONDUIT SUPPORT THROUGH DIAPHRAGM (W5)
SCALE 1:10

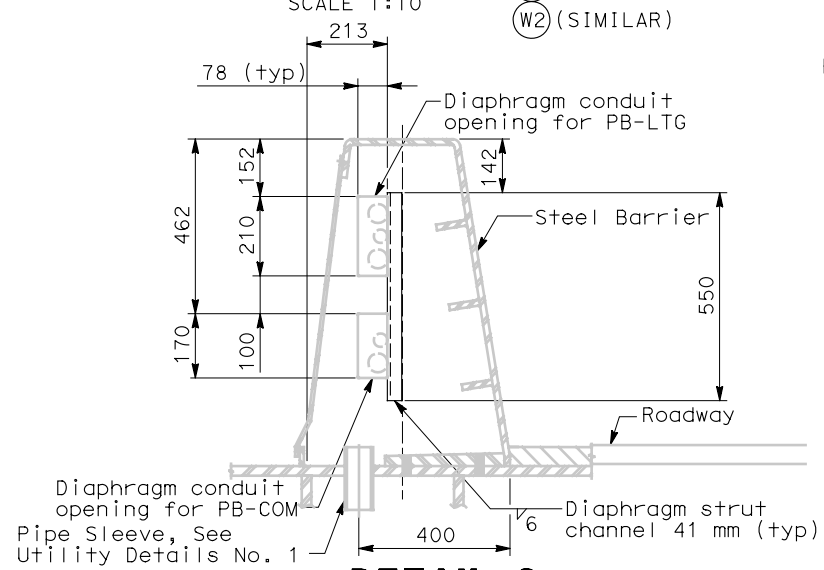

DETAIL 2

TYPICAL CONDUIT SUPPORT THROUGH DIAPHRAGM (W2)
SCALE 1:10

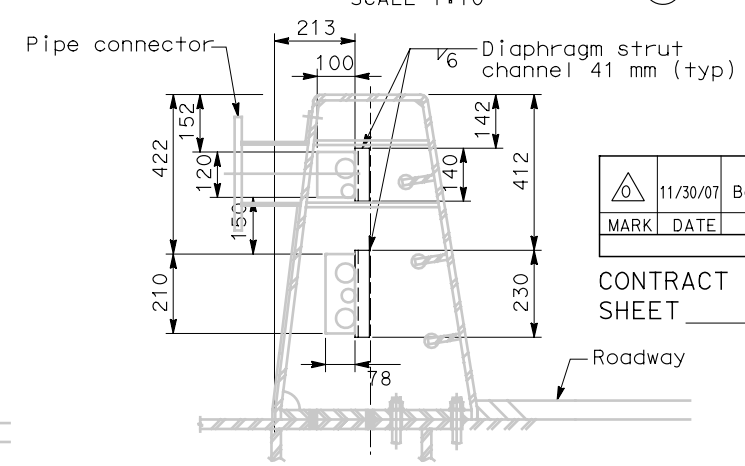

DETAIL 3

AT BARRIER WITH MOUNTED SIGNS
CONDUIT SUPPORT DIAPHRAGM E5 (PP38 + 2.150)
CONDUIT SUPPORT DIAPHRAGM E2 (PP38 + 2.150)
SCALE 1:10

MARK	DATE	DESCRIPTIONS	BY	CK	CCO
0	11/30/07	Barrier Modifications.	EL	RG	44

REVISIONS

CONTRACT CHANGE ORDER NO. 44
SHEET ____ OF ____

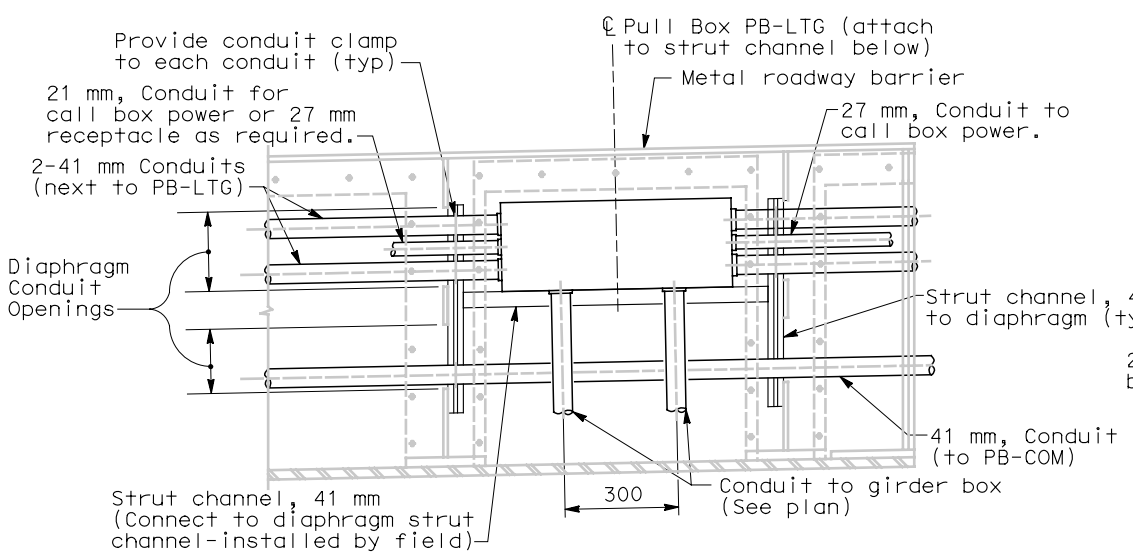

DETAIL 4

TYPICAL CONDUIT SUPPORT PULL BOX PB-LTG MOUNTING
SCALE 1:10

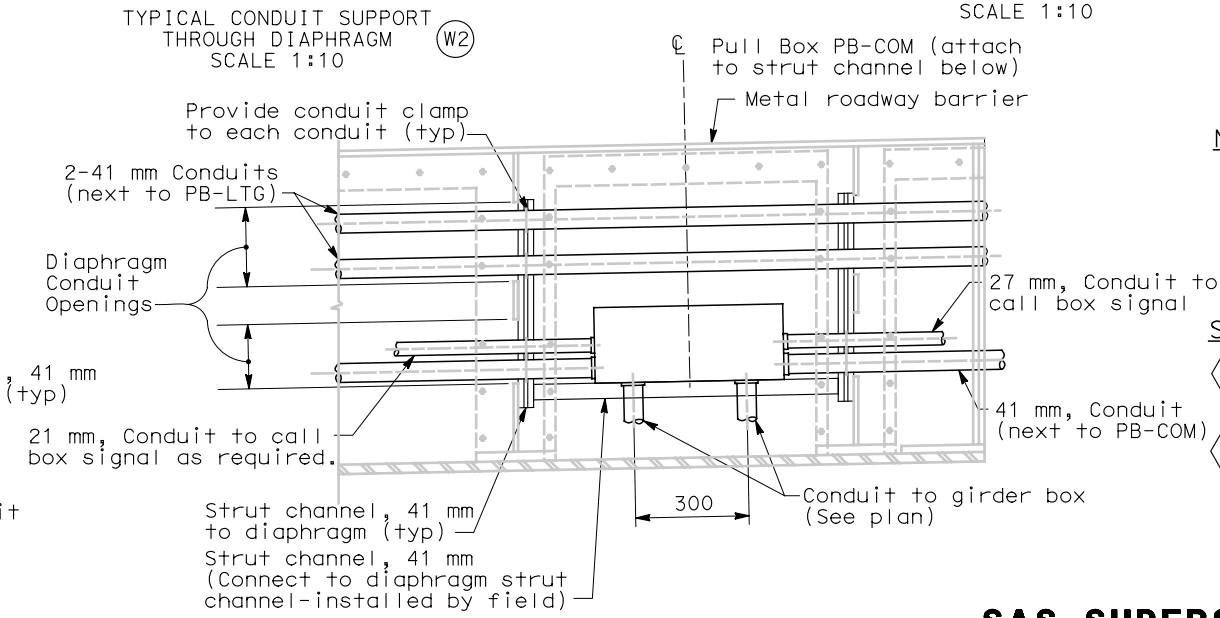

DETAIL 5

TYPICAL CONDUIT SUPPORT PULL BOX PB-COM MOUNTING
SCALE 1:10

NOTES:

1. References:
   - For pull box schedule, see Sheet E-83.
   - For barrier details, see structural drawings.
2. For location of pull boxes inside girder, see Sheet E-96 through E-101.

SHEET NOTES:

(1) To prevent moisture from passing inside the sleeve, the Contractor shall install sealant between the sleeve and conduit.

(2) Spare pipe sleeves shall be capped on both ends.

DETAILS
SAS SUPERSTRUCTURE ROADWAY CONDUIT AND PULL BOX LOCATIONS

SCALE AS NOTED

E-66A

THIS PLAN IS ACCURATE FOR ELECTRICAL WORK ONLY.

ALL DIMENSIONS ARE IN MILLIMETERS UNLESS OTHERWISE SHOWN.

FOR REDUCED PLANS ORIGINAL SCALE IS IN MILLIMETERS 0 20 40 60 80

DGN FILE =>t:\13103\ms\pse\sas struc\cco\sas cco44\04-0120f1_0131s01r00.dgn
USERNAME =>reyesl

CU 04251

EA 0120F1

LAST REVISION 00-00-00

DATE PLOTTED => 11/29/2007
TIME PLOTTED => 2:34:52 PM

STATE OF CALIFORNIA - DEPARTMENT OF TRANSPORTATION

Caltrans

DESIGN OVERSIGHT BEHZAD GOLEMOHAMMADI

CALCULATED/DESIGNED BY FK DATE 11/02 REVISED BY
CHECKED BY IAH 11/02 DATE REVISED