| DIST. | COUNTY | ROUTE | KILOMETER POST TOTAL PROJECT | SHEET NO. | TOTAL SHEETS |
|---|---|---|---|---|---|
| 04 | SF | 80 | 13.2/13.9 | 876R1 | 1204 |

Caltrans Metric

George Baker
REGISTERED ENGINEER - CIVIL
12-6-04
PLANS APPROVAL DATE

REGISTERED PROFESSIONAL ENGINEER George S. Baker No. C57112 Exp. 12/31/05 CIVIL STATE OF CALIFORNIA

*The State of California or its officers or agents shall not be responsible for the accuracy or completeness of electronic copies of this plan sheet.*

REGISTERED PROFESSIONAL ENGINEER Daniel J. Turner No. C 65033 Exp. 06/30/09 CIVIL STATE OF CALIFORNIA

FOR REVISIONS ONLY

T.Y. LIN / MOFFATT & NICHOL
825 BATTERY STREET
SAN FRANCISCO, CA 94111

*Caltrans now has a web site! To get to the web site, go to: http://www.dot.ca.gov*

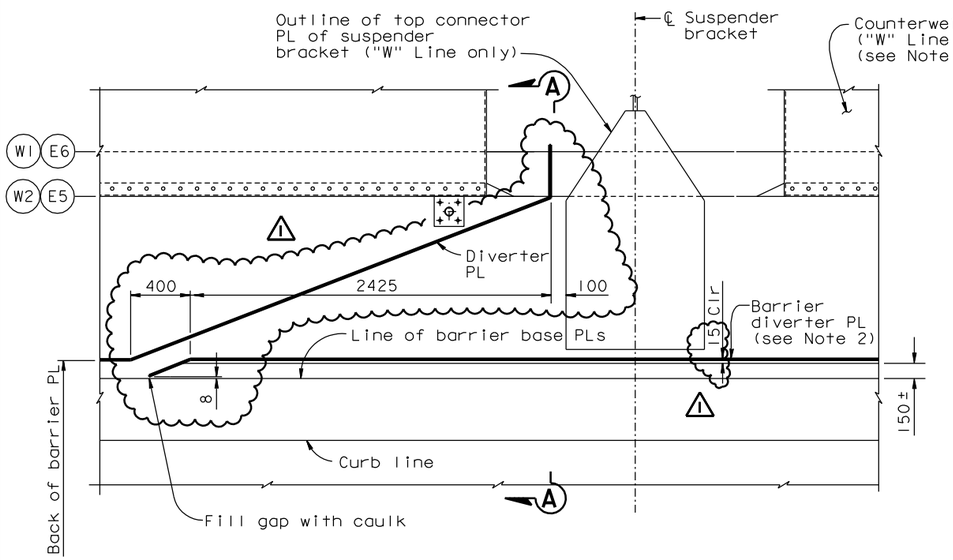


("W" Line girder shown. "E" Line girder similar UNO)

## TYPICAL DRAINAGE PLAN TYPE 1 (See Notes 3 & 5)

1:20

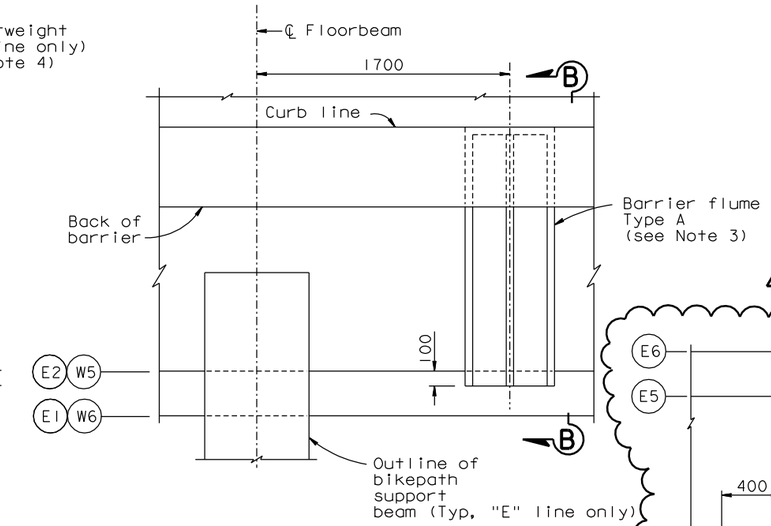


("E" Line girder shown. "W" Line girder similar UNO)

## TYPICAL DRAINAGE PLAN TYPE 2

1:20 (See Note 3)

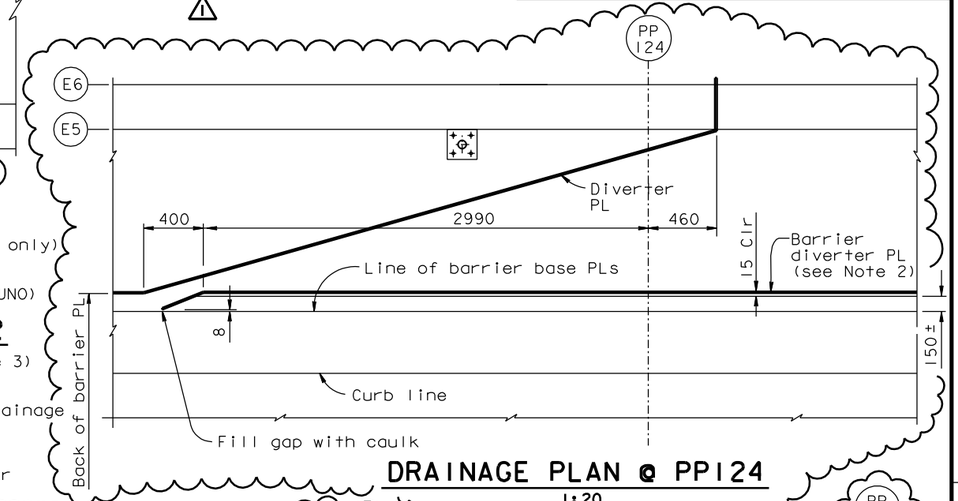


## DRAINAGE PLAN @ PP124

1:20

NOTES:

1. For sections A-A, A'-A', B-B, C-C, see "Deck Drainage Details No.2" sheet.
2. Barrier diverter plate shall be continuous along barriers near working lines W2 and E5, unless otherwise shown.
3. For barrier flume details and locations of drainage types 1, 2 and 3, see "Deck Drainage Details No.3" sheet.
4. For Counterweight details, see "Typical Girder Details" sheets.
5. Diverter plates may be shifted to avoid interference with cable railing base plate upon review and approval by the Engineer.

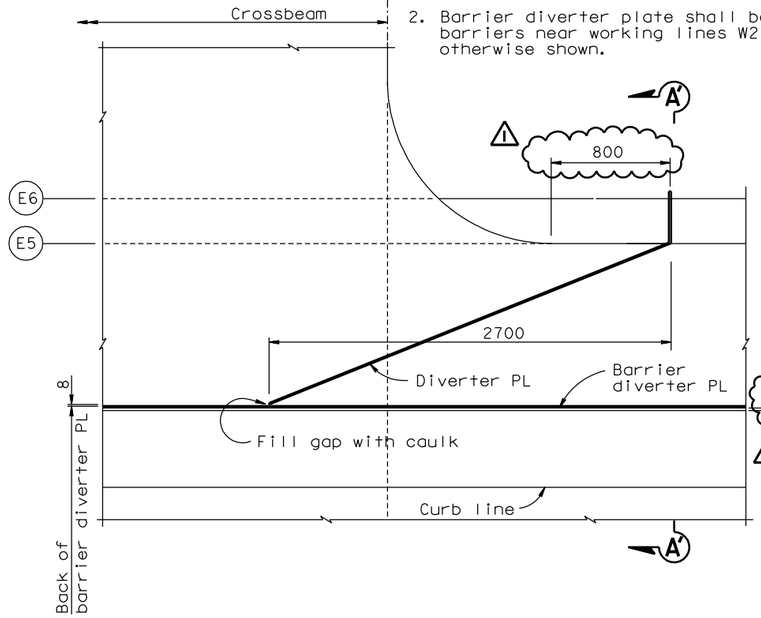


## TYPICAL DRAINAGE PLAN TYPE 3 (See Notes 3 & 5)

1:20

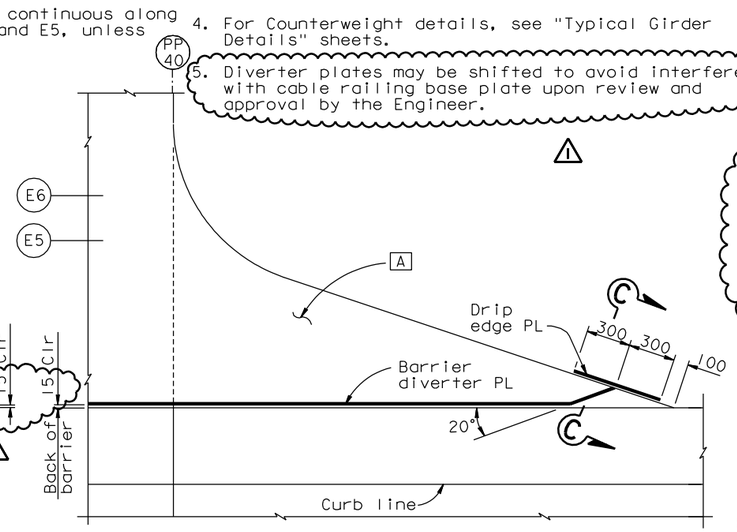


AT "E" LINE PP40 ONLY

## DRAINAGE PLAN TYPE 4

1:20

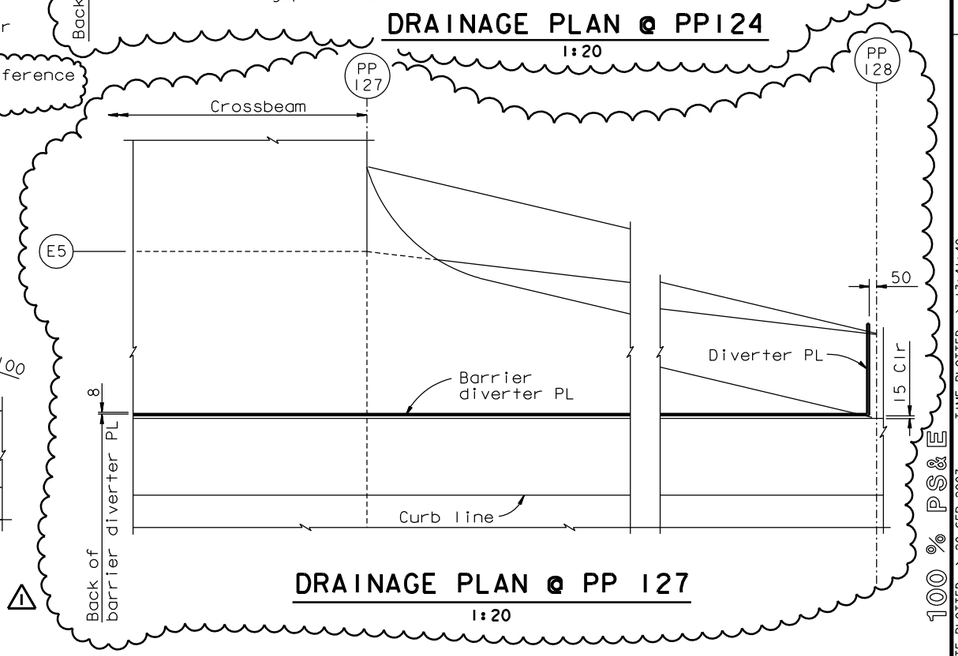


## DRAINAGE PLAN @ PP 127

1:20

ALL DIMENSIONS ARE IN MILLIMETERS UNLESS OTHERWISE SHOWN

100 % PS&E

| MARK | DATE | DESCRIPTIONS | BY | CH'D | CCO# |
|---|---|---|---|---|---|
| 1 | 08/24/07 | BARRIER MODIFICATIONS | GB | DT | 44 |

REVISIONS

CONTRACT CHANGE ORDER NO. ____
SHEET ___ OF ___

R. Valizadeh/V. Toan/Y.L./W.L./F.C.
DESIGN OVERSIGHT
Ryan Valizadeh / Vong Toan / Y. Liu
SIGN OFF DATE 08/24/07

Rev. Date: 5-18-98

| | BY | CHECKED |
|---|---|---|
| DESIGN | G. Baker | T. Ho |
| DETAILS | D. Turner | T. Ho |
| QUANTITIES | G. Baker | D. Harrison |

PREPARED FOR THE STATE OF CALIFORNIA DEPARTMENT OF TRANSPORTATION

R. Manzanarez
PROJECT ENGINEER

BRIDGE NO. 34-0006L/R
KILOMETER POST 13.2/13.9

SAN FRANCISCO OAKLAND BAY BRIDGE
EAST SPAN SEISMIC SAFETY PROJECT
SELF-ANCHORED SUSPENSION BRIDGE
(SUPERSTRUCTURE & TOWER)

# DECK DRAINAGE DETAILS NO. 1

ORIGINAL SCALE IN MILLIMETERS FOR REDUCED PLANS 0 10 20 30 40 50 60 70 80 90 100

CU 04
EA 0120F1

DISREGARD PRINTS BEARING EARLIER REVISION DATES

REVISION DATES (PRELIMINARY STAGE ONLY): 05/15/99 08/02/99 05/31/01 04/08/02 07/01/02 12/19/02

SHEET 459R1 OF

FILE => L:\BB\04-012001\SAS\Contract Plans and CCO\CCO\In Progress\CCO=44\DGN\akdkd01.dgn

USERNAME => dwinrow DATE PLOTTED => 20 SEP 2007 TIME PLOTTED => 13:41:40