| DIST. | COUNTY | ROUTE | KILOMETER POST TOTAL PROJECT | SHEET NO. | TOTAL SHEETS |
|---|---|---|---|---|---|
| 04 | SF | 80 | 13.2/13.9 | 905R2 | 1204 |

REGISTERED ENGINEER - CIVIL

12-6-04
PLANS APPROVAL DATE

REGISTERED PROFESSIONAL ENGINEER Tien Hung Ho No. C 43990 Exp. 06/30/09 CIVIL STATE OF CALIFORNIA

*The State of California or its officers or agents shall not be responsible for the accuracy or completeness of electronic copies of this plan sheet.*

T.Y. LIN / MOFFATT & NICHOL
825 BATTERY STREET
SAN FRANCISCO, CA 94111

*Caltrans now has a web site! To get to the web site, go to: http://www.dot.ca.gov*

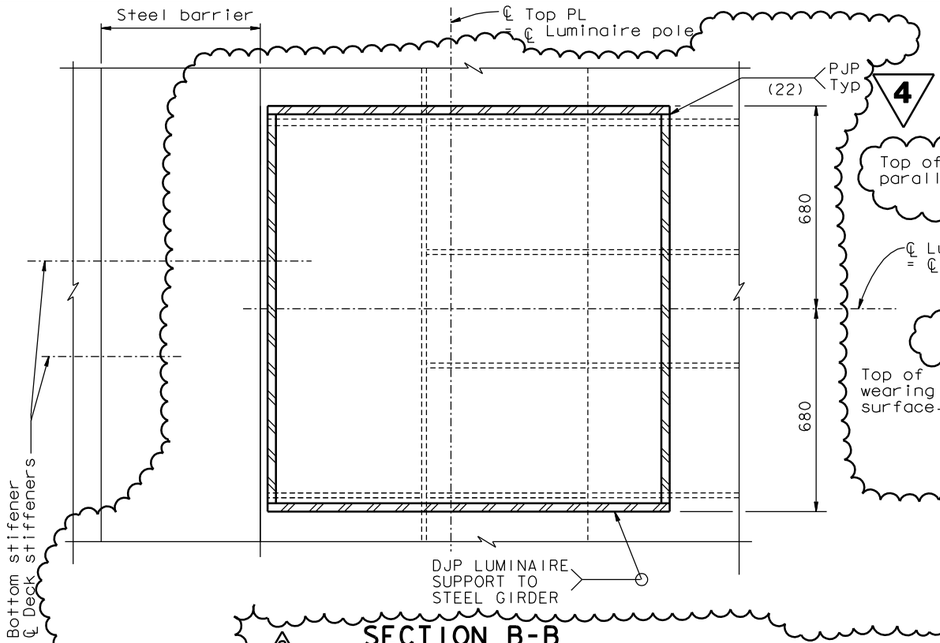


## SECTION B-B
1:10

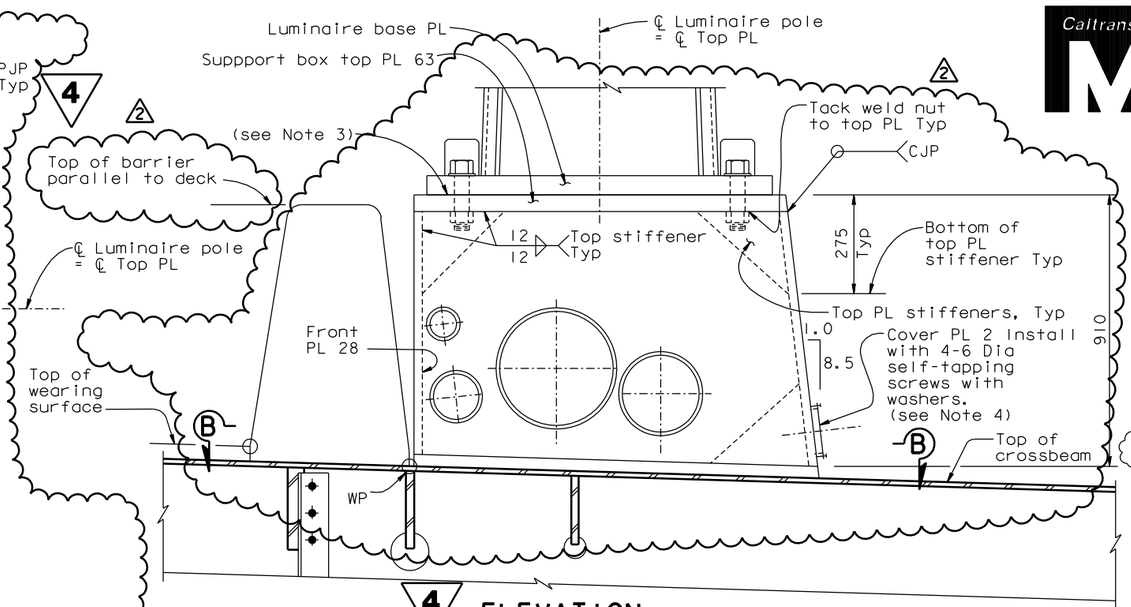


## ELEVATION (OVER CROSSBEAM, WB shown, EB similar)

## WELDED LUMINAIRE SUPPORT BOX
1:10

NOTES:

1. For dimensions and details not shown, see "Luminaire Support Details No. 1" sheet.
2. Anchor rods at the base PL connection shall be tensioned to 0.5Fy.
3. Surfaces of plates shall be milled level to ensure bearing.
4. Silicone seal around edge of cover plate to ensure watertightness.
5. The Contractor shall submit for approval by the Engineer details of conduit penetration through deck plate. Conduit penetration details shall be completely sealed to ensure no water leakage into support box.
6. For location of luminaire, see "Road Plans" sheets.
7. For geometry of luminaire base plate, conduit openings and location of bolts, see "Road Plans".
8. All reinforcement in concrete luminaire support shall be epoxy coated.

## DETAIL A
NTS

| MARK | DATE | DESCRIPTIONS | BY | CH'D | CCO# |
|---|---|---|---|---|---|
| 2 | 08/24/07 | BARRIER MODIFICATIONS | TH | JD | 44 |
| 1 | 07/21/06 | W2 CAP BEAM ISD | JD | NV | 23 |

REVISIONS

CONTRACT CHANGE ORDER NO. ___
SHEET ___ OF ___

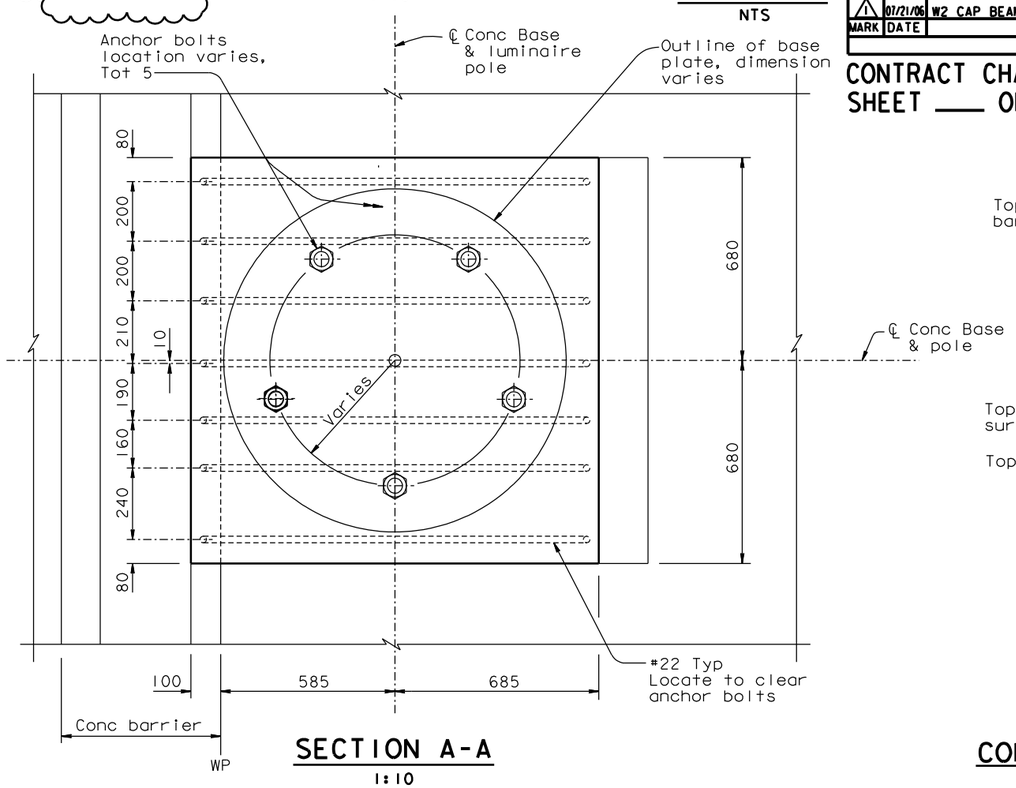


## SECTION A-A
1:10

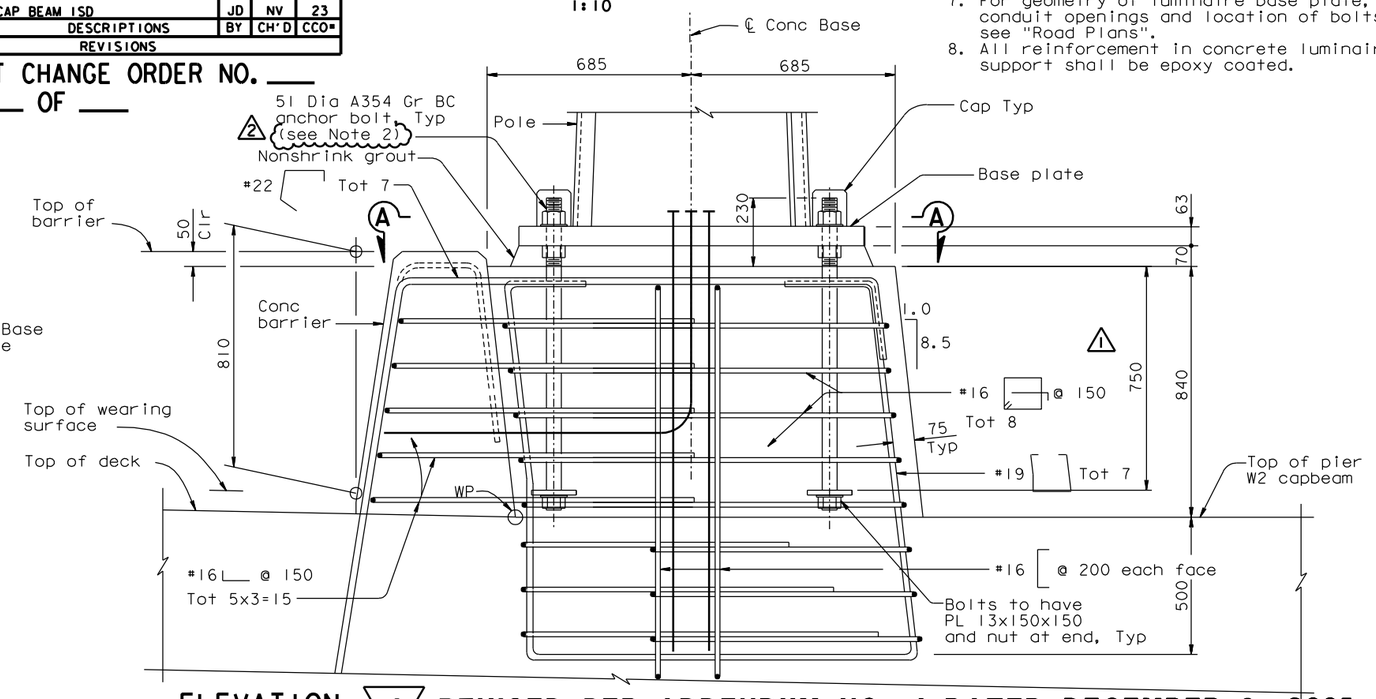


## ELEVATION

4 REVISED PER ADDENDUM NO. 4 DATED DECEMBER 9, 2005

## CONCRETE LUMINAIRE SUPPORT
1:10

ALL DIMENSIONS ARE IN MILLIMETERS UNLESS OTHERWISE SHOWN

R. Valizadeh/V. Toan/Y.L./W.L./F.C.
DESIGN OVERSIGHT
Y. Liu
SIGN OFF DATE 08/24/07

| | BY | CHECKED |
|---|---|---|
| DESIGN | T. Ho | C. Redfield |
| DETAILS | R. Xu | C. Redfield |
| QUANTITIES | C. Mauch | K. Cormier |

PREPARED FOR THE STATE OF CALIFORNIA DEPARTMENT OF TRANSPORTATION

R. Manzanarez
PROJECT ENGINEER

BRIDGE NO. 34-0006L/R
KILOMETER POST 13.2/13.9

SAN FRANCISCO OAKLAND BAY BRIDGE
EAST SPAN SEISMIC SAFETY PROJECT
SELF-ANCHORED SUSPENSION BRIDGE
(SUPERSTRUCTURE & TOWER)

# LUMINAIRE SUPPORT DETAILS NO. 2

Rev. Date: 5-18-98

ORIGINAL SCALE IN MILLIMETERS FOR REDUCED PLANS 0 10 20 30 40 50 60 70 80 90 100

CU 04
EA 0120F1

DISREGARD PRINTS BEARING EARLIER REVISION DATES

REVISION DATES (PRELIMINARY STAGE ONLY) 05/31/01 04/08/02 07/01/02 12/19/02 11/13/05

SHEET 488R2 OF

FILE => I:\bb\04-012001\sas\contract plans and cco\cco\in progress\cco#44\dgn\akiht08a.dgn

100% PS&E

DATE PLOTTED => 19 SEP 2007 TIME PLOTTED => 11:36:58

USERNAME => dwinrow