DIST.	COUNTY	ROUTE	KILOMETER POST TOTAL PROJECT	SHEET NO.	TOTAL SHEETS
04	SF	80	13.2/13.9	890R1	1204

REGISTERED ENGINEER - CIVIL

12-6-04
PLANS APPROVAL DATE

REGISTERED PROFESSIONAL ENGINEER Tien Hung Ho No. C 43990 Exp. 6/30/09 CIVIL STATE OF CALIFORNIA

The State of California or its officers or agents shall not be responsible for the accuracy or completeness of electronic copies of this plan sheet.

T.Y. LIN / MOFFATT & NICHOL
825 BATTERY STREET
SAN FRANCISCO, CA 94111

Caltrans now has a web site! To get to the web site, go to: http://www.dot.ca.gov

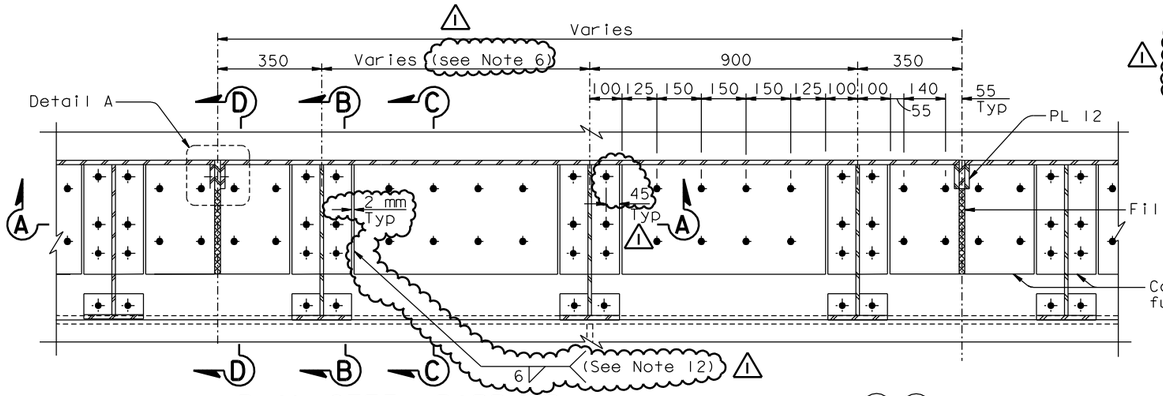

PLAN-STEEL BARRIER Type 732 Modified for W2 E5

1:10

6. Barrier length and diaphragm spacing varies west of PP 9 and from PP 118 to Hinge A. See Detail D on "Girder At Pier W2 No. 3" sheet. and "Girder Framing Plan No.4" sheet.
7. For call box penetrations and locations see "Road Plans".
8. Cut line for cover PLs located 3300 west of panel points listed under Type 1 in "Drainage Type Location Table" on "Deck Drainage Detail No.3" sheet.
9. For details not shown, see "Barrier Details No.1" sheet.
10. 25 Dia holes shall be used in barrier base plates and steel deck plate for 22 Dia bolts.
11. For conduit and box support details, see "Road Plans"
12. In lieu of the 6 mm fillet weld, an equivalent PJP weld may be provided.

MARK	DATE	DESCRIPTIONS	BY	CH'D	CCO#
1	08/24/07	BARRIER MODIFICATIONS	GB	TH	44
		REVISIONS			

CONTRACT CHANGE ORDER NO. ____
SHEET ___ OF ___

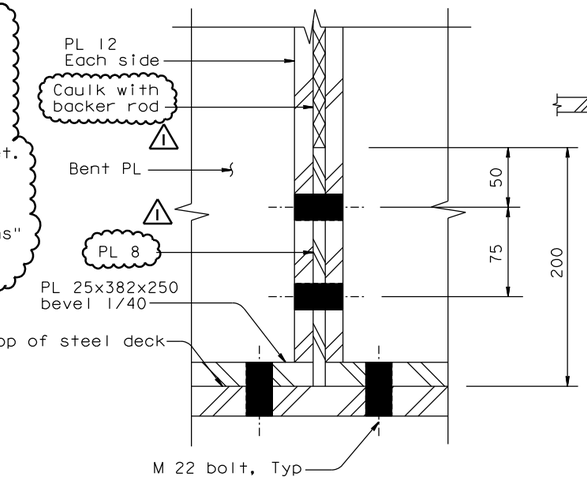

SECTION E-E

1:2.5

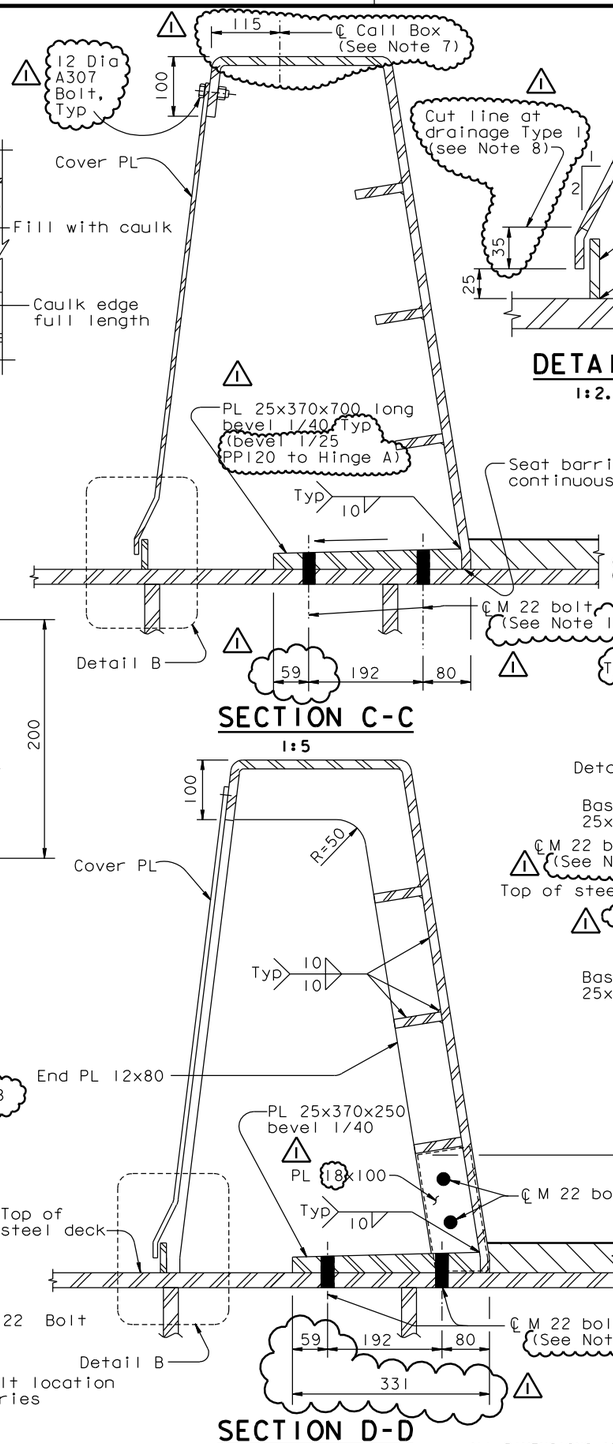

SECTION C-C

1:5

SECTION D-D

1:5

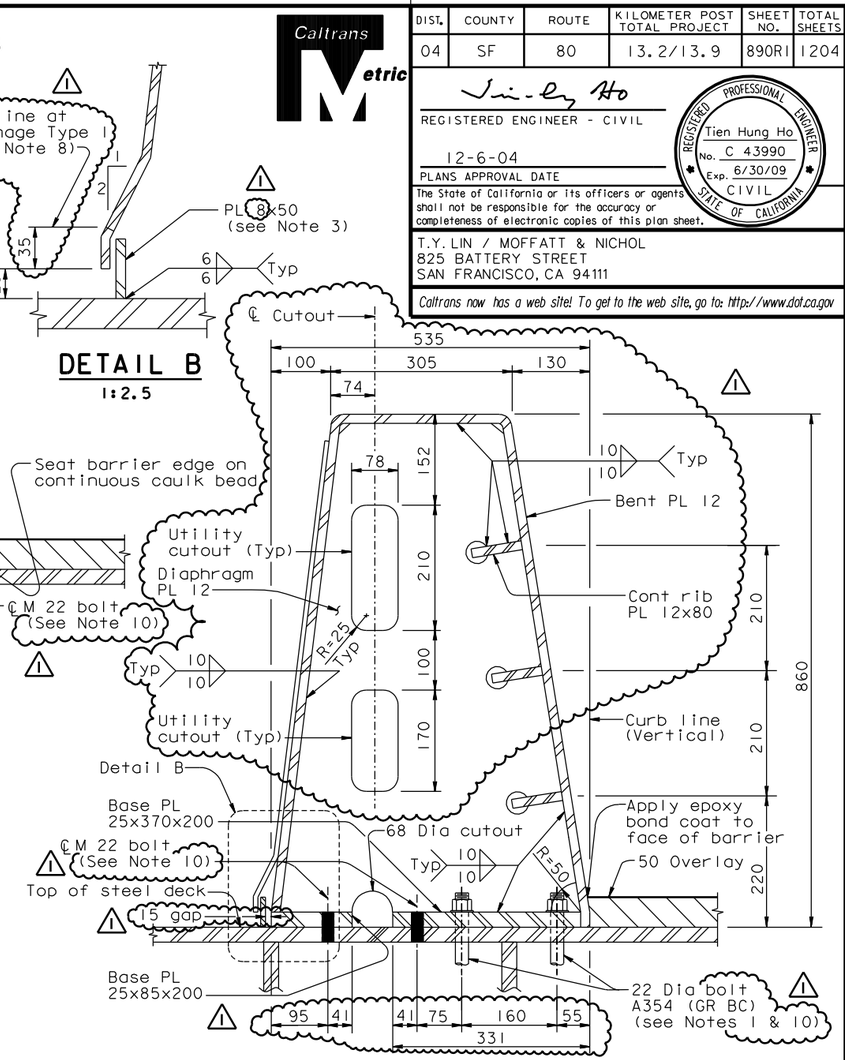

SECTION B-B

1:5

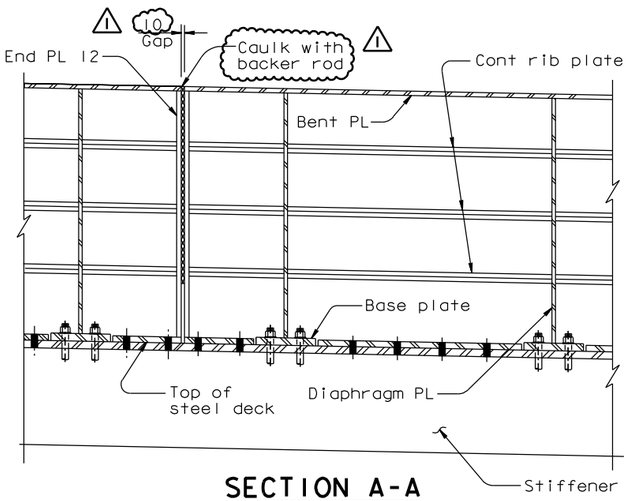

SECTION A-A

1:10

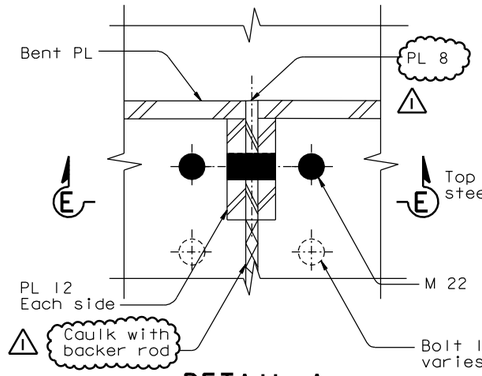

DETAIL A

1:2.5

NOTES:

1. For steel barrier to box girder connection details, see "Typical Girder Details" and "Barrier Details No.1" sheets.
2. Inlets and flume plates exist on south barrier of each deck only.
3. For locations of drainage features, see "Deck Drainage Details No. 2" sheet. Slot cover over Diverter plate where shown on "Deck Drainage Details No.1" sheet.
4. For conduit penetration thru deck and beveled plate detail, see "Utility Detail" sheets.
5. For utilities inside barrier, see "Road Plans".

ALL DIMENSIONS ARE IN MILLIMETERS UNLESS OTHERWISE SHOWN

R. Valizadeh/V. Toan/Y.L./W.L./F.C.
DESIGN OVERSIGHT
Ryan Valizadeh / Vong Toan / Y. Liu
SIGN OFF DATE 08/24/07

DESIGN	BY T. Ho	CHECKED M. Nader	
DETAILS	BY G. Baker	CHECKED M. Nader	
QUANTITIES	BY C. Shi	CHECKED K. Cormier	

PREPARED FOR THE STATE OF CALIFORNIA DEPARTMENT OF TRANSPORTATION

R. Manzanarez
PROJECT ENGINEER

BRIDGE NO. 34-0006L/R
KILOMETER POST 13.2/13.9

SAN FRANCISCO OAKLAND BAY BRIDGE
EAST SPAN SEISMIC SAFETY PROJECT
SELF-ANCHORED SUSPENSION BRIDGE
(SUPERSTRUCTURE & TOWER)

BARRIER DETAILS NO. 2

Rev. Date: 5-18-98

ORIGINAL SCALE IN MILLIMETERS FOR REDUCED PLANS 0 10 20 30 40 50 60 70 80 90 100

CU 04
EA 0120F1

DISREGARD PRINTS BEARING EARLIER REVISION DATES

REVISION DATES (PRELIMINARY STAGE ONLY): 01/15/99 05/15/99 08/02/99 05/14/01 04/08/02 07/01/02 12/19/02

SHEET 473R1 OF

FILE => I:\bb\04-012001\sas\contract plans and cco\cco\in progress\cco#44\dgn\akbar03.dgn

USERNAME => vignatovsky DATE PLOTTED => 14 SEP 2007 TIME PLOTTED => 13:54:51

100 % PS&E