DIST.	COUNTY	ROUTE	KILOMETER POST TOTAL PROJECT	SHEET NO.	TOTAL SHEETS
04	SF	80	13.2/13.9	876R1	1204

Caltrans Metric

George Baker
REGISTERED ENGINEER - CIVIL
12-6-04
PLANS APPROVAL DATE

REGISTERED PROFESSIONAL ENGINEER George S. Baker No. C57112 Exp. 12/31/05 CIVIL STATE OF CALIFORNIA

The State of California or its officers or agents shall not be responsible for the accuracy or completeness of electronic copies of this plan sheet.

REGISTERED PROFESSIONAL ENGINEER Daniel J. Turner No. C 65033 Exp. 06/30/09 CIVIL STATE OF CALIFORNIA

FOR REVISIONS ONLY

T.Y. LIN / MOFFATT & NICHOL
825 BATTERY STREET
SAN FRANCISCO, CA 94111

Caltrans now has a web site! To get to the web site, go to: http://www.dot.ca.gov

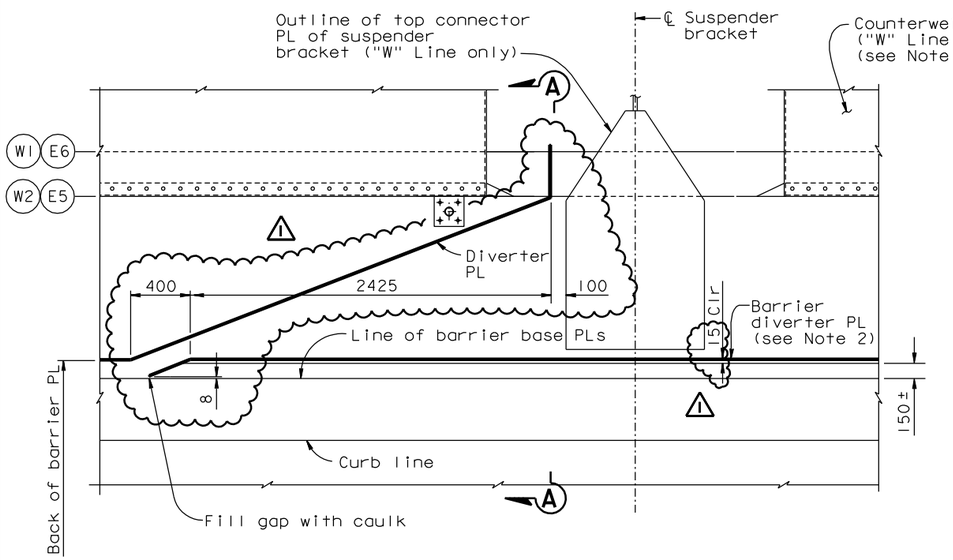

("W" Line girder shown. "E" Line girder similar UNO)

TYPICAL DRAINAGE PLAN TYPE 1 (See Notes 3 & 5)

1:20

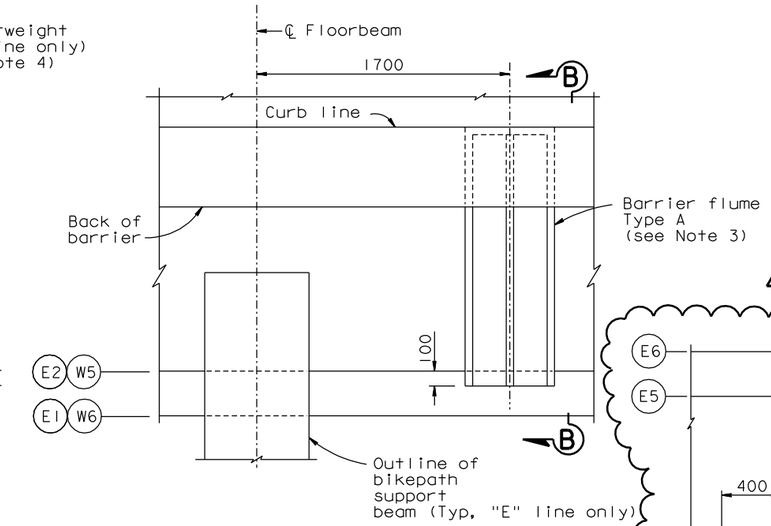

("E" Line girder shown. "W" Line girder similar UNO)

TYPICAL DRAINAGE PLAN TYPE 2

1:20 (See Note 3)

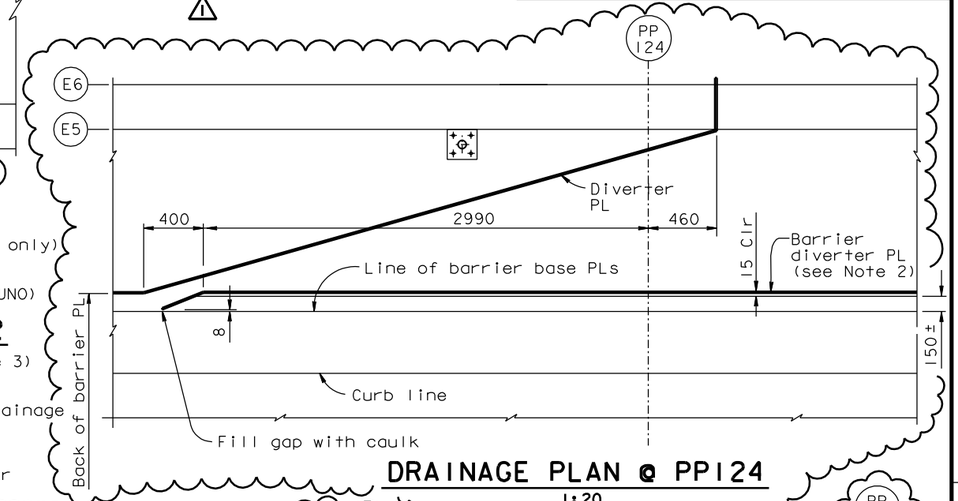

DRAINAGE PLAN @ PP124

1:20

NOTES:

1. For sections A-A, A'-A', B-B, C-C, see "Deck Drainage Details No.2" sheet.
2. Barrier diverter plate shall be continuous along barriers near working lines W2 and E5, unless otherwise shown.
3. For barrier flume details and locations of drainage types 1, 2 and 3, see "Deck Drainage Details No.3" sheet.
4. For Counterweight details, see "Typical Girder Details" sheets.
5. Diverter plates may be shifted to avoid interference with cable railing base plate upon review and approval by the Engineer.

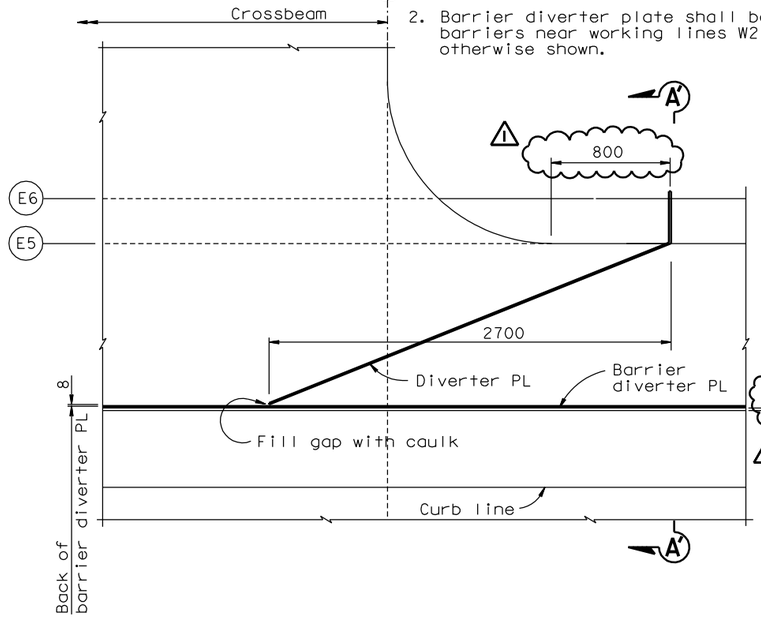

TYPICAL DRAINAGE PLAN TYPE 3

1:20 (See Notes 3 & 5)

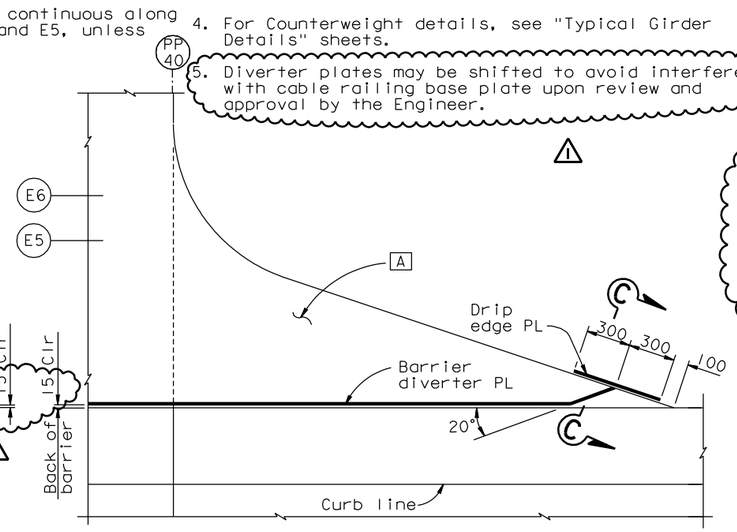

AT "E" LINE PP40 ONLY

DRAINAGE PLAN TYPE 4

1:20

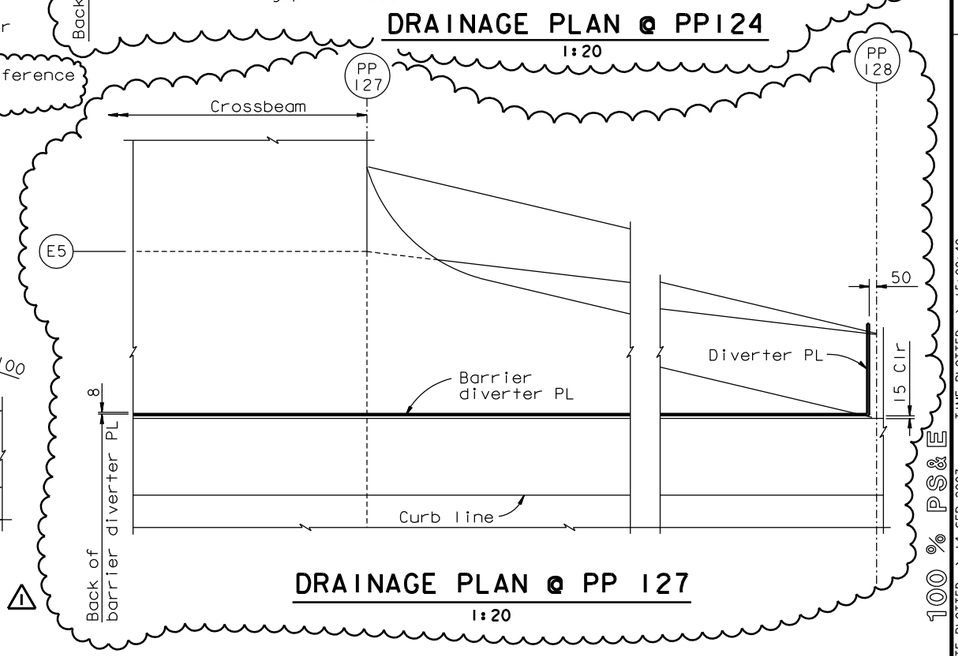

DRAINAGE PLAN @ PP 127

1:20

ALL DIMENSIONS ARE IN MILLIMETERS UNLESS OTHERWISE SHOWN

MARK	DATE	DESCRIPTIONS	BY	CH'D	CCO#
1	08/24/07	BARRIER MODIFICATIONS	GB	DT	44

REVISIONS

CONTRACT CHANGE ORDER NO. ____
SHEET ___ OF ___

R. Valizadeh/V. Toan/Y.L./W.L./F.C.
DESIGN OVERSIGHT
Ryan Valizadeh / Vong Toan / Y. Liu
SIGN OFF DATE 08/24/07

Rev. Date: 5-18-98

	BY	CHECKED
DESIGN	G. Baker	T. Ho
DETAILS	D. Turner	T. Ho
QUANTITIES	G. Baker	D. Harrison

PREPARED FOR THE STATE OF CALIFORNIA DEPARTMENT OF TRANSPORTATION

R. Manzanarez
PROJECT ENGINEER

ORIGINAL SCALE IN MILLIMETERS FOR REDUCED PLANS 0 10 20 30 40 50 60 70 80 90 100

CU 04
EA 0120F1

BRIDGE NO. 34-0006L/R
KILOMETER POST 13.2/13.9

DISREGARD PRINTS BEARING EARLIER REVISION DATES

REVISION DATES (PRELIMINARY STAGE ONLY): 05/15/99 08/02/99 05/31/01 04/08/02 07/01/02 12/19/02

SHEET 459R1 OF

SAN FRANCISCO OAKLAND BAY BRIDGE
EAST SPAN SEISMIC SAFETY PROJECT
SELF-ANCHORED SUSPENSION BRIDGE
(SUPERSTRUCTURE & TOWER)

DECK DRAINAGE DETAILS NO. 1

100% PS&E

USERNAME => vignatovsk DATE PLOTTED => 14 SEP 2007 TIME PLOTTED => 15:08:40

FILE => I:\bb\04-012001\sas\contract plans and cco\cco\in progress\cco#44\dgn\akdkd01.dgn