DIST.	COUNTY	ROUTE	KILOMETER POST TOTAL PROJECT	SHEET NO.	TOTAL SHEETS
04	SF	80	13.2/13.9	966R1	1204

REGISTERED ENGINEER - CIL

1-27-03
PLANS APPROVAL DATE

REGISTERED PROFESSIONAL ENGINEER Marwan N. Nader No. C 054426 Exp. 12/31/07 CIVIL STATE OF CALIFORNIA

The State of California or its officers or agents shall not be responsible for the accuracy or completeness of electronic copies of this plan sheet.

T.Y. LIN / MOFFATT & NICHOL
825 BATTERY STREET
SAN FRANCISCO, CA 94111

To get to the web site, go to: http://www.dot.ca.gov

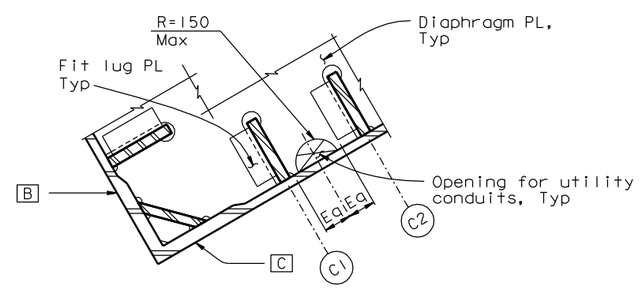

TYPICAL
1:20

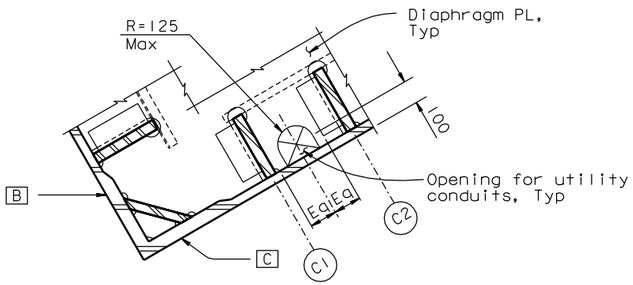

AT DIAPHRAGM TYPE 2C ONLY
1:20

DIAPHRAGM COPE DETAIL FOR UTILITY CONDUITS

4

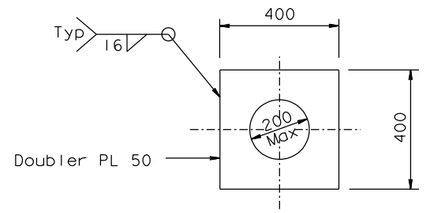

FOR DEHUMIDIFICATION CONDUITS (see Note 3)
1:10

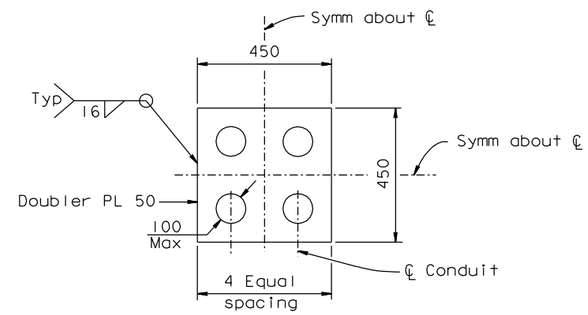

FOR ELECTRIC CONDUITS (see Note 1)
1:10

HOLE STIFFENING DETAIL FOR UTILITY CONDUITS

4

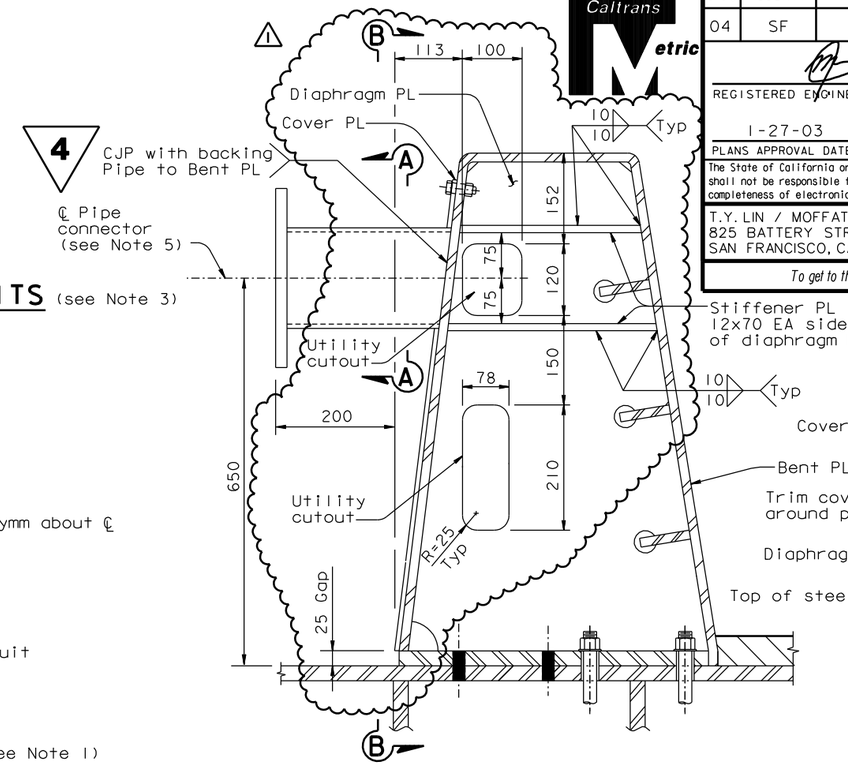

PIPE CONNECTOR FOR SIGN ON BARRIER
1:5

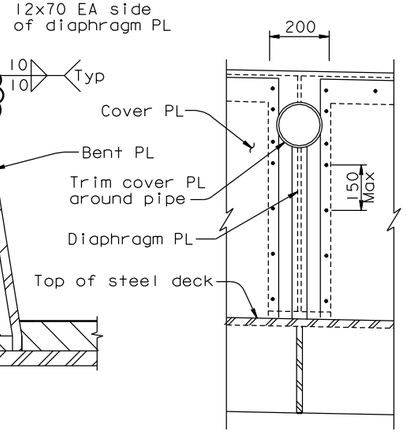

SECTION B-B
1:10

LEGEND:

(C1) Tower longitudinal stiffener designation (see Note 4)

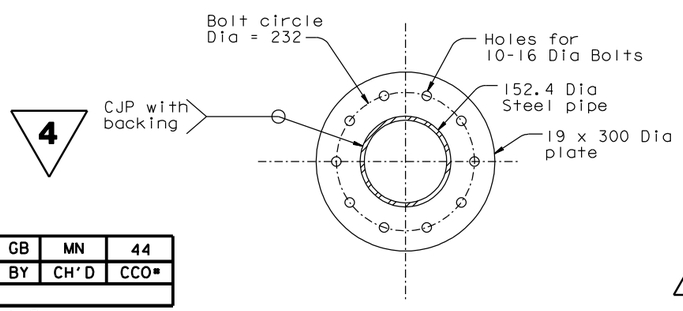

SECTION A-A
1:5

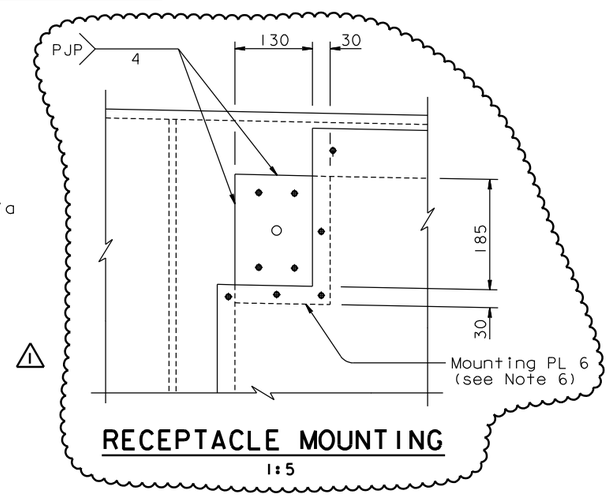

RECEPTACLE MOUNTING
1:5

NOTES:

1. Drill holes (100 Dia Max) as required up to 4 maximum. Seal around conduits with silicone caulk with backing rods.
2. For utility layout and details, see "Road Plans".
3. Drill hole and seal to conduits as required for dehumidification conduits. For other duct penetrations, see similar "Duct Opening Detail" on "Dehumidification Support Details No.5" sheet.
4. For tower longitudinal stiffener locations, see "Tower Shaft Details" sheets.
5. Pipe connector must line up with barrier diaphragm. Sign location shall be moved to the nearest diaphragm. See "Barrier Details" sheets for barrier details. See Road Plans for sign details.
6. For mounting screw and openings in mounting PL see "Road Plans."
7. For conduit and box support details, see "Road Plans".

MARK	DATE	DESCRIPTIONS	BY	CH'D	CCO#
1	08/24/07	BARRIER MODIFICATIONS	GB	MN	44

REVISIONS

CONTRACT CHANGE ORDER NO. _____
SHEET ____ OF ____

4 **REVISED PER ADDENDUM NO. 4 DATED DECEMBER 9, 2005**

ALL DIMENSIONS ARE IN MILLIMETERS UNLESS OTHERWISE SHOWN

R. Valizadeh/V. Toan/Y.L./W.L./F.C.
DESIGN OVERSIGHT
Roya Valizadeh / Vong Toan / Y. Lin
SIGN OFF DATE 08/24/07

	BY	CHECKED
DESIGN	M. Nader	T. Ho
DETAILS	L. Rus	T. Ho
QUANTITIES	L. Rus	D. Harrison

PREPARED FOR THE STATE OF CALIFORNIA DEPARTMENT OF TRANSPORTATION

R. Manzanarez
PROJECT ENGINEER

BRIDGE NO. 34-0006L/R
KILOMETER POST 13.2/13.9

SAN FRANCISCO OAKLAND BAY BRIDGE
EAST SPAN SEISMIC SAFETY PROJECT
SELF-ANCHORED SUSPENSION BRIDGE
(SUPERSTRUCTURE & TOWER)

UTILITY DETAILS NO. 2

Rev. Date: 5-18-98

ORIGINAL SCALE IN MILLIMETERS FOR REDUCED PLANS 0 10 20 30 40 50 60 70 80 90 100

CU 04
EA 0120F1

DISREGARD PRINTS BEARING EARLIER REVISION DATES

REVISION DATES (PRELIMINARY STAGE ONLY) 04/08/02 07/01/02 12/19/02 11/13/05

SHEET 549R1 OF

FILE => I:\bb\04-012001\sas\contract plans and cco\cco\in progress\cco#44\dgn\akmscl4.dgn

100% PS&E 05 SEP 2007 TIME:3P8:15ED =>

USERNAME => vlignatovsk DATE PLOTTED =>