DIST.	COUNTY	ROUTE	KILOMETER POST TOTAL PROJECT	SHEET NO.	TOTAL SHEETS
04	SF	80	13.2/13.9	890S3R2	1204

REGISTERED ENGINEER - CIVIL

04-05-10
PLANS APPROVAL DATE

REGISTERED PROFESSIONAL ENGINEER Marwan N. Nader No. C 054426 Exp. 12/31/11 CIVIL STATE OF CALIFORNIA

The State of California or its officers or agents shall not be responsible for the accuracy or completeness of electronic copies of this plan sheet.

T.Y. LIN / MOFFATT & NICHOL
825 BATTERY STREET
SAN FRANCISCO, CA 94111

Caltrans now has a web site! To get to the web site, go to: http://www.dot.ca.gov

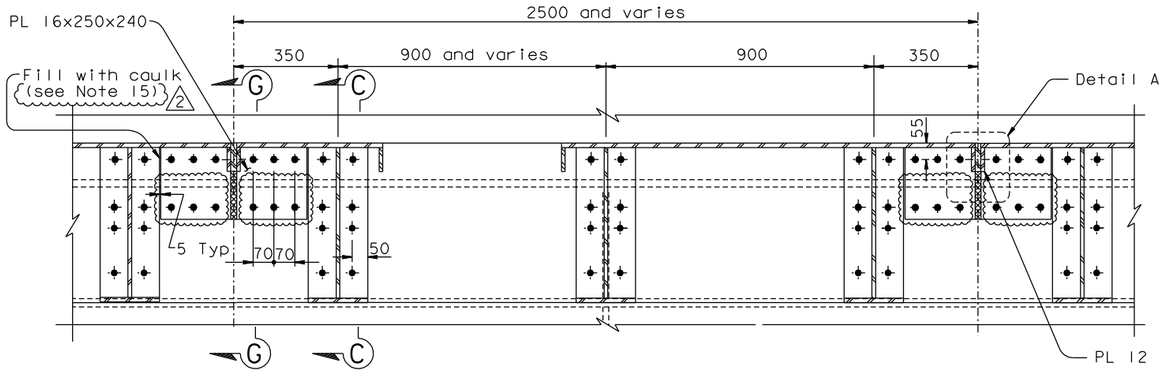

PLAN-STEEL BARRIER Type 732 Modified for W5 E2
1:10 (See Note 13)

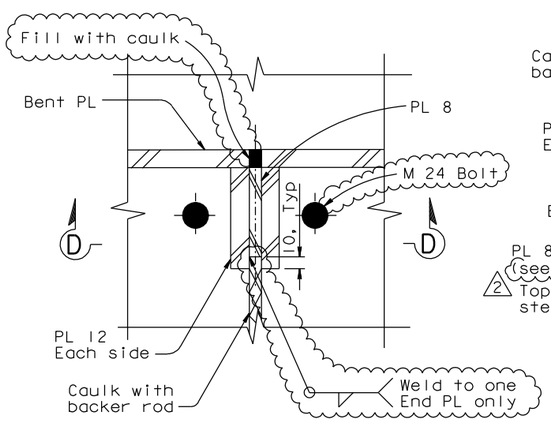

DETAIL A
1:2.5

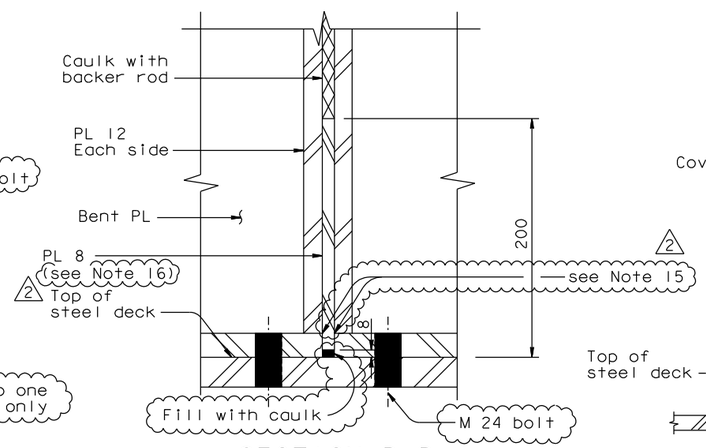

SECTION D-D
1:2.5

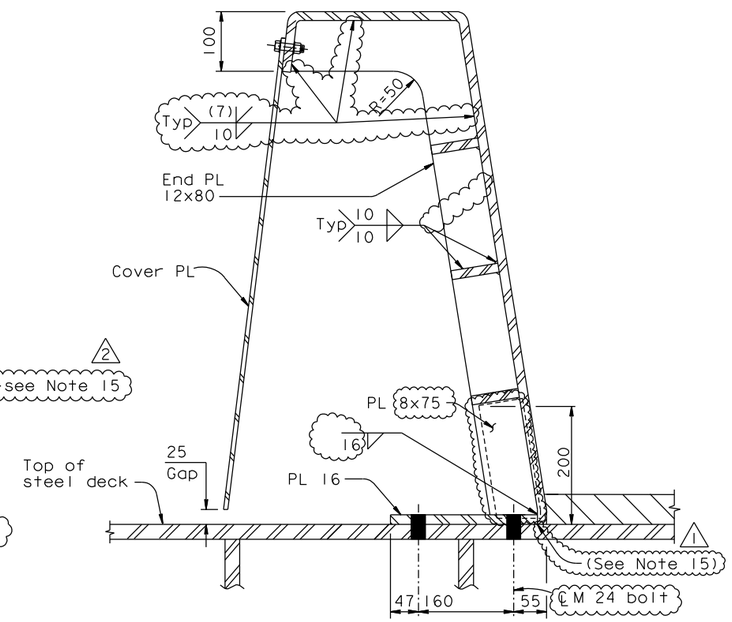

SECTION G-G
1:5

NOTES:

1. For steel barrier to box girder connection details, see "Typical Girder Details" sheets.
2. Inlets and flume plates exist on south barrier of each deck only.
3. For locations and details of drainage features, see "Deck Drainage Details" sheets. Slot cover over Diverter plate where shown on "Deck Drainage Details No. 1" sheet.
4. For conduit penetration thru deck and beveled plate detail, see "Utility Details" sheets.
5. For utilities inside barrier, pipe supports and other attachments to barrier, see "Road Plans".
6. The contractor shall provide cutouts for conduit penetrations as required. Conduit penetrations shall be arranged so as to allow removal of cover plate.
7. Barrier length and diaphragm spacing vary west of PP 9 and from PP 118 to Hinge A. See Detail D on "Girder at Pier W2 No. 3" sheet and "Girder Framing Plan No. 4" sheet. Bolt spacings may be varied within the requirements of "Bolt Dimension Table" on "Typical Girder Details No. 1" sheet.
8. For receptacle mounting see "Utility Details No. 2". For locations see "Road Plans".
9. For conduit and box support details, and for call box penetrations and locations, see "Road Plans".
10. Between PP 120+350 and PP 120+1250, the Contractor shall provide shim plates under the barrier base plates and under the barrier connections as required to fill the gap caused by the OBG kink. The 68 Dia drainage cut-out in the barrier diaphragm shall not be blocked, and the caulk shall be thickened under the barrier along the curb lines between these panel points.
11. Bolt holes shall be standard size in the deck PL and oversize in the barrier.
12. All bolts between the barrier and the deck shall be tensioned prior to load transfer.
13. For Section C-C and Details not shown for Lines W5/E2, see "Barrier Details No. 1".
14. Following installation of all HS bolts all anchor rods for barrier segment shall be installed snug tight. They shall then be tightened by an additional one-half turn of the nut.
15. At the Contractor's option, a seal weld may be used in lieu of caulk seal between:
    - Base PL 25 & PL 12
    - Base PL 25 & PL 16
    - PL 16 & PL 12,

    subject to review and approval of the Engineer. (2) (1)
16. At the Contractor's option, the PL 8 may be removed provided the caulk with backer rod is extended to the top of steel deck, subject to review and approval of the Engineer. (2)

CONTRACT CHANGE ORDER NO. _____
SHEET ____ OF ____

REQUESTS FOR INFORMATION NOT ADDRESSED IN THIS CCO REMAIN IN FORCE

ALTERNATE BARRIER DETAILS - CONNECTION BEFORE LOAD TRANSFER

ALL DIMENSIONS ARE IN MILLIMETERS UNLESS OTHERWISE SHOWN

MARK	DATE	DESCRIPTIONS	BY	CH'D	CCO#
2	01/21/11	BARRIER MODIFICATIONS	GB	MN	44
1	10/22/10	BARRIER MODIFICATIONS	GB	MN	44
0	04/05/10	BARRIER MODIFICATIONS	GB	MN	44

REVISIONS

R. Valizadeh/V. Toan/Y.L./W.L./F.C.
DESIGN OVERSIGHT
SIGN OFF DATE 01/21/11

	BY	CHECKED
DESIGN	M. Nader	G. Baker
DETAILS	D. Turner	J. Duxbury
QUANTITIES	J. Duxbury	D. Turner

PREPARED FOR THE STATE OF CALIFORNIA DEPARTMENT OF TRANSPORTATION

R. Manzanarez
PROJECT ENGINEER

BRIDGE NO. 34-0006L/R
KILOMETER POST 13.2/13.9

SAN FRANCISCO OAKLAND BAY BRIDGE
EAST SPAN SEISMIC SAFETY PROJECT
SELF-ANCHORED SUSPENSION BRIDGE
(SUPERSTRUCTURE & TOWER)

BARRIER DETAILS NO. 2C

Rev. Date: 5-18-98

ORIGINAL SCALE IN MILLIMETERS FOR REDUCED PLANS 0 10 20 30 40 50 60 70 80 90 100

CU 04
EA 0120F1

DISREGARD PRINTS BEARING EARLIER REVISION DATES 04/05/10

REVISION DATES (PRELIMINARY STAGE ONLY)

SHEET 473S3R2 OF

FILE => I:\bb\04-012001\sas\contract plans and cco\cco\cco#44\21-revision 01-21-11\dgn\akbar03c.dgn

USERNAME => DWinrow DATE PLOTTED => 21 JAN 2011 TIME PLOTTED => 14:59:30

100% PS&E