DIST.	COUNTY	ROUTE	KILOMETER POST TOTAL PROJECT	SHEET NO.	TOTAL SHEETS
04	SF	80	13.2/13.9	890SIR5	1204

REGISTERED ENGINEER - CIVIL

01-20-10
PLANS APPROVAL DATE

REGISTERED PROFESSIONAL ENGINEER Tien Hung Ho No. C 43990 Exp. 06/30/11 CIVIL STATE OF CALIFORNIA

The State of California or its officers or agents shall not be responsible for the accuracy or completeness of electronic copies of this plan sheet.

T.Y. LIN / MOFFATT & NICHOL
825 BATTERY STREET
SAN FRANCISCO, CA 94111

Caltrans now has a web site! To get to the web site, go to: http://www.dot.ca.gov

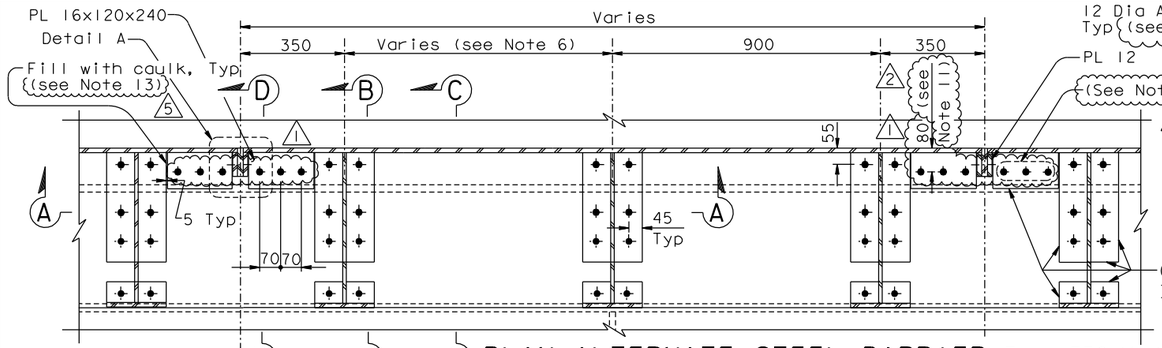

PLAN-ALTERNATE STEEL BARRIER

Type 732 Modified for W2 E5

1:10

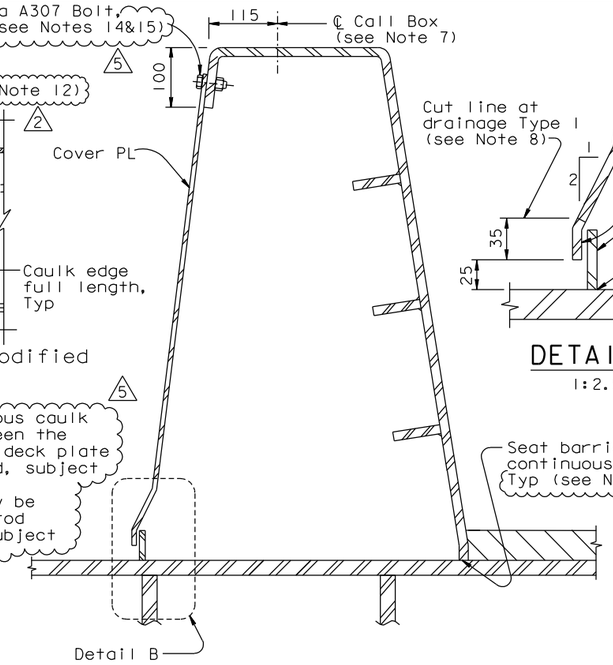

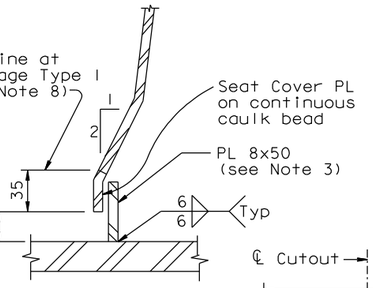

DETAIL B

1:2.5

7. For call box penetrations and locations see "Road Plans".
8. Cut line for cover PLs located 3300 west of panel points listed under Type I in "Drainage Type Location Table" on "Deck Drainage Detail No.3" sheet.
9. For details not shown, see "Barrier Details No.1" sheet.
10. For 22 Dia bolts, use 24 Dia holes in steel deck plates and 27 Dia holes in barrier base plate.
11. A spacing of 55 mm shall be used between PP 47 and Hinge A.
12. At the Contractor's option, the 3-M22 bolt pattern at each barrier end may be replaced with 4-M22 bolts using 25x319x243 plates between PP 8 and PP 47. For details of PL 25x319x243 not shown, see "Barrier Details No.2" sheet.
13. At the Contractor's option, a seal weld may be used in lieu of caulk seal between:
    - Base PL 25 & PL 12
    - Base PL 25 & PL 16
    - PL 16 & PL 12,

    subject to review and approval of the Engineer.
14. At the Contractor's option, M12 cap screw may be used. Also at the Contractor's option, tapped hole may be used.
15. At the Contractor's option, 16 Dia oversize holes may be used in the cover plate with washer of sufficient size to cover the oversize holes, subject to review and approval of the Engineer.
16. At the Contractor's option, the continuous caulk bead may be applied along the seam between the interior barrier face plate and the OBG deck plate after barrier segments have been aligned, subject to review and approval of the Engineer.
17. At the Contractor's option, the PL 8 may be removed provided the caulk with backer rod is extended to the top of steel deck, subject to review and approval of the Engineer.

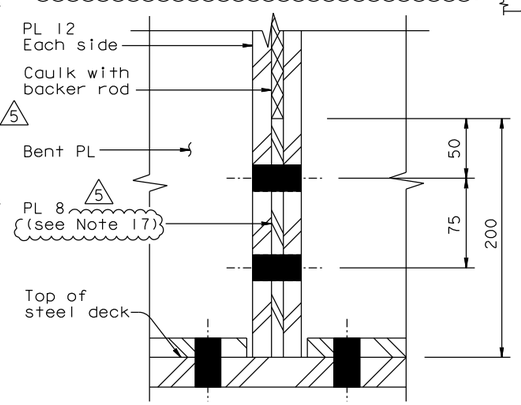

SECTION E-E

1:2.5

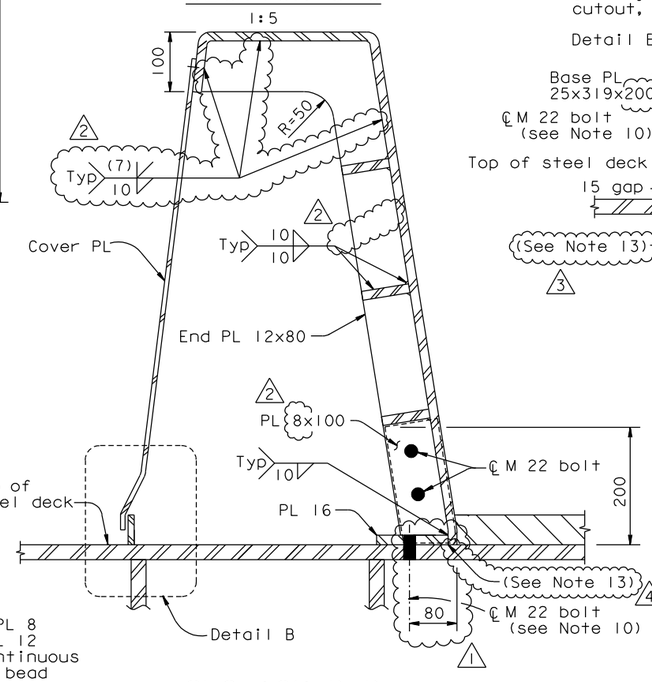

SECTION C-C

1:5

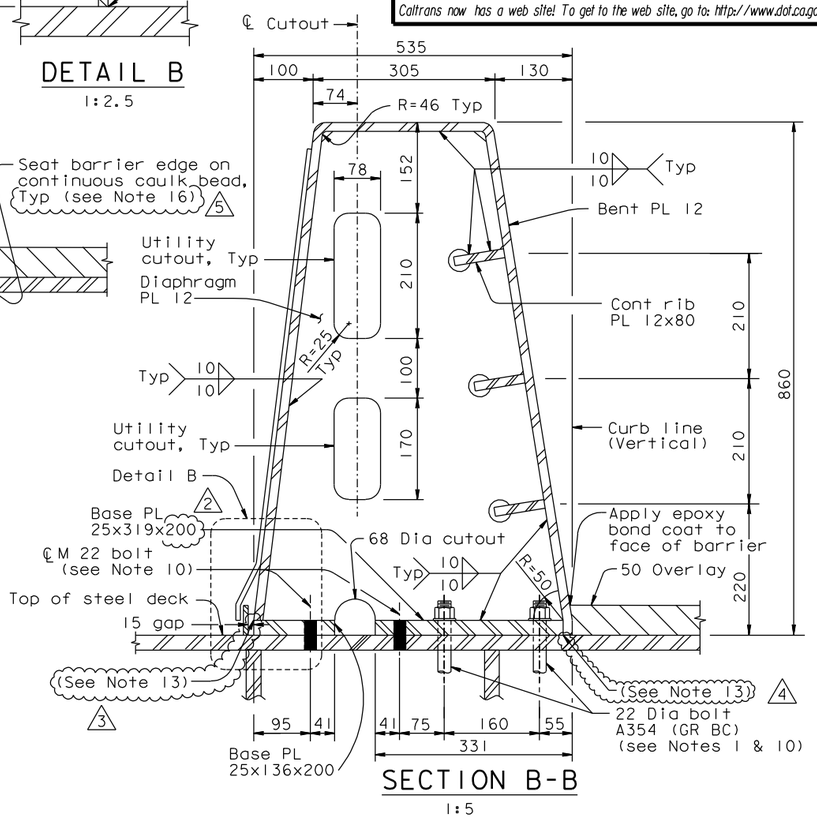

SECTION B-B

1:5

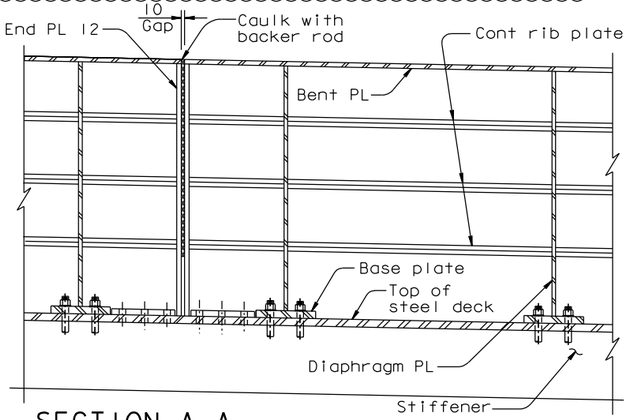

SECTION A-A

1:10

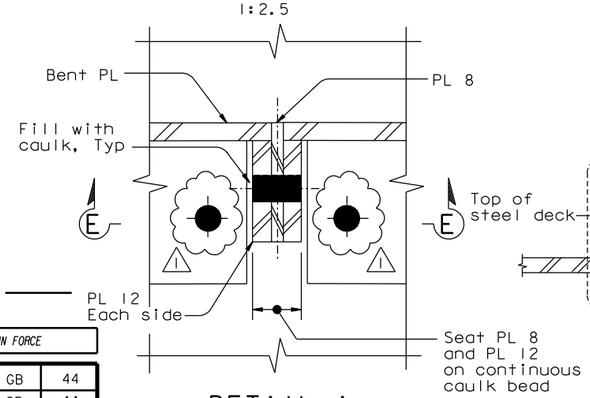

DETAIL A

1:2.5

NOTES:

1. For steel barrier to box girder connection details, see "Typical Girder Details" and "Barrier Details No.1" sheets.
2. Inlets and flume plates exist on south barrier of each deck only.
3. For locations of drainage features, see "Deck Drainage Details No. 2" sheet. Slot cover over Diverter plate where shown on "Deck Drainage Details No.1" sheet.
4. For conduit penetration thru deck and beveled plate detail, see "Utility Detail" sheets.
5. For utilities inside barrier support details, conduit and box, see "Road Plans".
6. Barrier length and diaphragm spacing varies west PP 9 and from PP 118 to Hinge A. See Detail D on "Girder At Pier W2 No. 3" sheet and "Girder Framing Plan No. 4" sheet.

CONTRACT CHANGE ORDER NO. ____
SHEET ____ OF ____

REQUESTS FOR INFORMATION NOT ADDRESSED IN THIS CCO REMAIN IN FORCE

MARK	DATE	DESCRIPTIONS	BY	CH'D	CCO#
5	01/21/11	BARRIER MODIFICATIONS	TH	GB	44
4	10/22/10	BARRIER MODIFICATIONS	TH	GB	44
3	09/14/10	BARRIER MODIFICATIONS	TH	GB	44
2	04/05/10	BARRIER MODIFICATIONS	TH	GB	44
1	01/29/10	BARRIER MODIFICATIONS	TH	GB	44
0	01/20/10	BARRIER MODIFICATIONS	TH	GB	44

REVISIONS

R. Valizadeh/V. Toan/Y.L./W.L./F.C.
DESIGN OVERSIGHT
SIGN OFF DATE 01/21/11

Rev. Date: 5-18-98

	BY	CHECKED
DESIGN	T. Ho	G. Baker
DETAILS	T. Ho	G. Baker
QUANTITIES	T. Ho	G. Baker

PREPARED FOR THE STATE OF CALIFORNIA DEPARTMENT OF TRANSPORTATION

R. Manzanarez
PROJECT ENGINEER

ALL DIMENSIONS ARE IN MILLIMETERS UNLESS OTHERWISE SHOWN

BRIDGE NO. 34-0006L/R
KILOMETER POST 13.2/13.9

SAN FRANCISCO OAKLAND BAY BRIDGE
EAST SPAN SEISMIC SAFETY PROJECT
SELF-ANCHORED SUSPENSION BRIDGE
(SUPERSTRUCTURE & TOWER)

BARRIER DETAILS NO. 2A

ORIGINAL SCALE IN MILLIMETERS FOR REDUCED PLANS 0 10 20 30 40 50 60 70 80 90 100

CU 04
EA 0120F1

DISREGARD PRINTS BEARING EARLIER REVISION DATES 01/20/10

REVISION DATES (PRELIMINARY STAGE ONLY)

SHEET 473SIR5 OF

FILE => I:\bb\04-012001\sas\contract plans and cco\cco\cco#44\21-revision 01-21-11\dgn\akbar03a.dgn

USERNAME => DWinrow DATE PLOTTED => 21 JAN 2011 TIME PLOTTED => 14:56:04

100% PS&E