| DIST. | COUNTY | ROUTE | KILOMETER POST TOTAL PROJECT | SHEET NO. | TOTAL SHEETS |
|---|---|---|---|---|---|
| 04 | SF | 80 | 13.2/13.9 | 889S1 | 1204 |

Caltrans Metric

REGISTERED ENGINEER - CIVIL

01-21-11
PLANS APPROVAL DATE

REGISTERED PROFESSIONAL ENGINEER Tien Hung Ho No. C 43990 Exp. 06/30/11 CIVIL STATE OF CALIFORNIA

*The State of California or its officers or agents shall not be responsible for the accuracy or completeness of electronic copies of this plan sheet.*

T.Y. LIN / MOFFATT & NICHOL
825 BATTERY STREET
SAN FRANCISCO, CA 94111

*Caltrans now has a web site! To get to the web site, go to: http://www.dot.ca.gov*

(DIMENSIONS TAKEN VERTICAL)

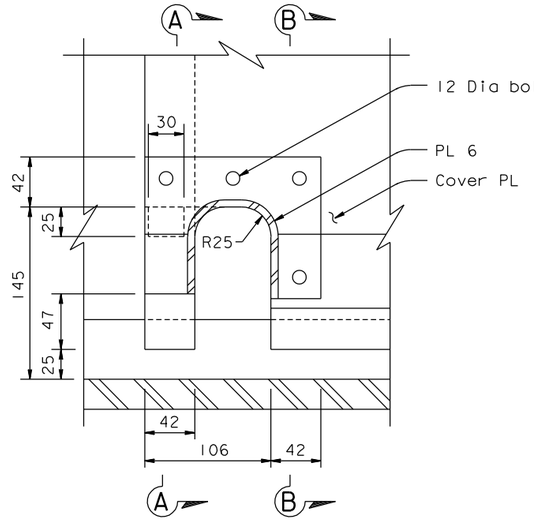


BARRIER AT (W2)(E5)

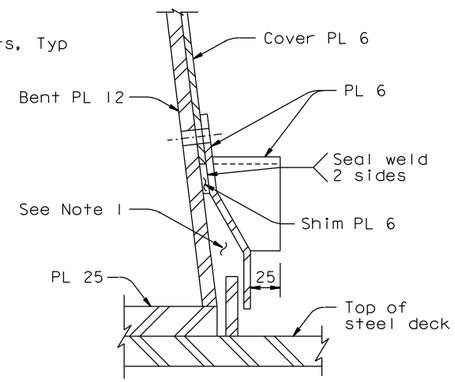


SECTION A-A

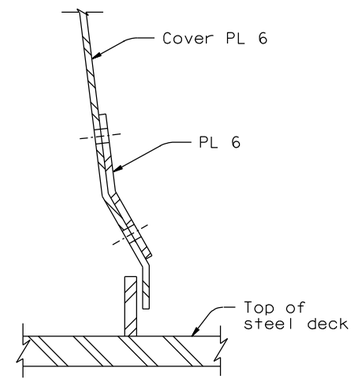


SECTION B-B

(DIMENSIONS TAKEN VERTICAL)

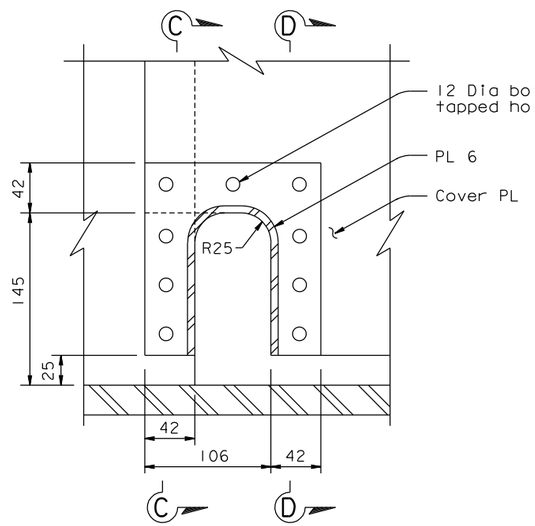


BARRIER AT (W5)(E2)

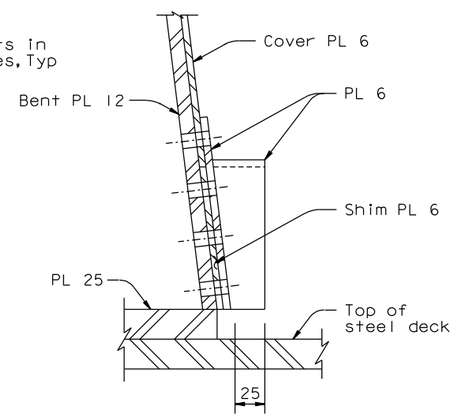


SECTION C-C

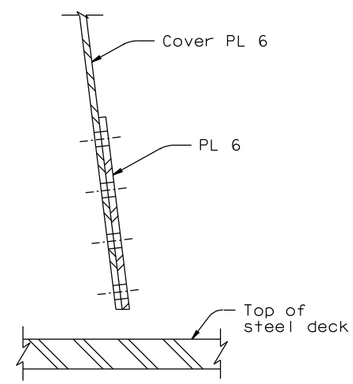


SECTION D-D

## CONDUIT PENETRATION DETAILS

1:2.5

NOTES:

1. For caulking details, see "Barrier Details No. 2" sheet.

CONTRACT CHANGE ORDER NO. _____
SHEET ____ OF ____

*REQUESTS FOR INFORMATION NOT ADDRESSED IN THIS CCO REMAIN IN FORCE*

ALL DIMENSIONS ARE IN MILLIMETERS UNLESS OTHERWISE SHOWN

R. Valizadeh/V. Toan/Y.L./W.L./F.C.
DESIGN OVERSIGHT
SIGN OFF DATE 01/21/11

| MARK | DATE | DESCRIPTIONS | BY | CH'D | CCO# |
|---|---|---|---|---|---|
| 0 | 01/21/11 | BARRIER MODIFICATIONS | GB | TH | 44 |

REVISIONS

| | BY | CHECKED |
|---|---|---|
| DESIGN | G. Baker | T. Ho |
| DETAILS | G. Baker | T. Ho |
| QUANTITIES | G. Baker | T. Ho |

PREPARED FOR THE STATE OF CALIFORNIA DEPARTMENT OF TRANSPORTATION

R. Manzanarez
PROJECT ENGINEER

BRIDGE NO. 34-0006L/R
KILOMETER POST 13.2/13.9

SAN FRANCISCO OAKLAND BAY BRIDGE
EAST SPAN SEISMIC SAFETY PROJECT
SELF-ANCHORED SUSPENSION BRIDGE
(SUPERSTRUCTURE & TOWER)

# BARRIER DETAILS NO. 1A

Rev. Date: 5-18-98

ORIGINAL SCALE IN MILLIMETERS FOR REDUCED PLANS 0 10 20 30 40 50 60 70 80 90 100

CU 04
EA 0120F1

DISREGARD PRINTS BEARING EARLIER REVISION DATES 01/21/11

REVISION DATES (PRELIMINARY STAGE ONLY)

SHEET 472S1 OF

FILE => I:\bb\04-012001\sas\contract plans and cco\cco\cco#44\21-revision 01-21-11\dgn\akbar01a.dgn

100 % PS&E

USERNAME => DWinrow DATE PLOTTED => 21 JAN 2011 TIME PLOTTED => 14:52:01