| DIST | COUNTY | ROUTE | KILOMETER POST TOTAL PROJECT | SHEET No | TOTAL SHEETS |
|---|---|---|---|---|---|
| 04 | SF | 80 | 13.2/13.9 | 130 R1 | 1204 |

REGISTERED ELECTRICAL ENGINEER 12/19/02 DATE

12-6-04
PLANS APPROVAL DATE

REGISTERED PROFESSIONAL ENGINEER JENS ERLINGSSON No. 8249 Exp. 9/30/06 ELECTRICAL STATE OF CALIFORNIA

PB POWER, Inc.
A Parsons Brinckerhoff Company
303 Second St., Suite 700N
San Francisco, CA 94107-1317

*The State of California or its officers or agents shall not be responsible for the accuracy or completeness of electronic copies of this plan sheet.*

*Caltrans now has a web site! To get to the web site, go to http://www.dot.ca.gov*

Caltrans Metric

## UTILITY PANEL UP-108 (CKT #1099)

Location: SAS SUPERSTRUCTURE SERVICE PLATFORM 8

| LOAD DESCRIPTION | LTG | REC | OTH. | CB | | CB | LTG | REC | OTH. | LOAD DESCRIPTION |
|---|---|---|---|---|---|---|---|---|---|---|
| Recept (1) Westbound North Barrier | | 180 | | 20/1 | 1 A 2 | 20/1 | | | 10 | CB-143A |
| Recept (3) Westbound South Barrier | | 540 | | 20/1 | 3 B 4 | 20/1 | | | 10 △1 | CB-143B 1 |
| Recept (2) Service Platform #8 | | 360 | | 20/1 | 5 C 6 | 20/1 | | | | Spare |
| Recept (3) Girder | | 540 | | 20/1 | 7 A 8 | 20/1 | 984 | | | Girder Ltg. (24) |
| Recept (6) Crossbeams | | 1080 | | 20/1 | 9 B 10 | 20/1 | 738 | | | Crossbeam Ltg (20) |
| RTU #11W (Lighting & Receptacle) | 105 | 180 | 150 | 20/1 | 11 C 12 | 20/1 | 820 | | | Crossbeam Ltg (20) |
| Recept (1) Crossbeams | | 180 | | 20/1 | 13 A 14 | 20/1 | | | | Spare |
| Spare | | | | 20/1 | 15 B 16 | 20/1 | | | | Spare |
| RTU #11W (PLC Power Supply) | | | 100 | 20/1 | 17 C 18 | 20/1 | | | | |
| Spare | | | | 20/1 | 19 A 20 | 20/1 | | | | |
| | | | | 20/1 | 21 B 22 | 20/1 | | | | |
| | | | | 20/1 | 23 C 24 | 20/1 | | | | |
| TOTAL VA | 105 | 3060 | 250 | | | | 2542 | △1 | 20 | TOTAL VA |

LOAD SUMMARY (INCLUDES .90 PF) (VA)

Lighting (At 100%): 2647
Gen Use (1st 10 kVA AT 100% Plus 50% of remainder): 3350

TOTAL kVA: 5.977 △1

BALANCE (kVA)

Phase A - 1.884 △1
Phase B - 2.358
Phase C - 1.715

VOLTAGE: 208Y/120 V
PHASE/WIRES: 3-phase, 4-wire
BUS RATING: 100 A
MAIN: 60 A
MOUNTING: Surface
K.A.I.C.: 10

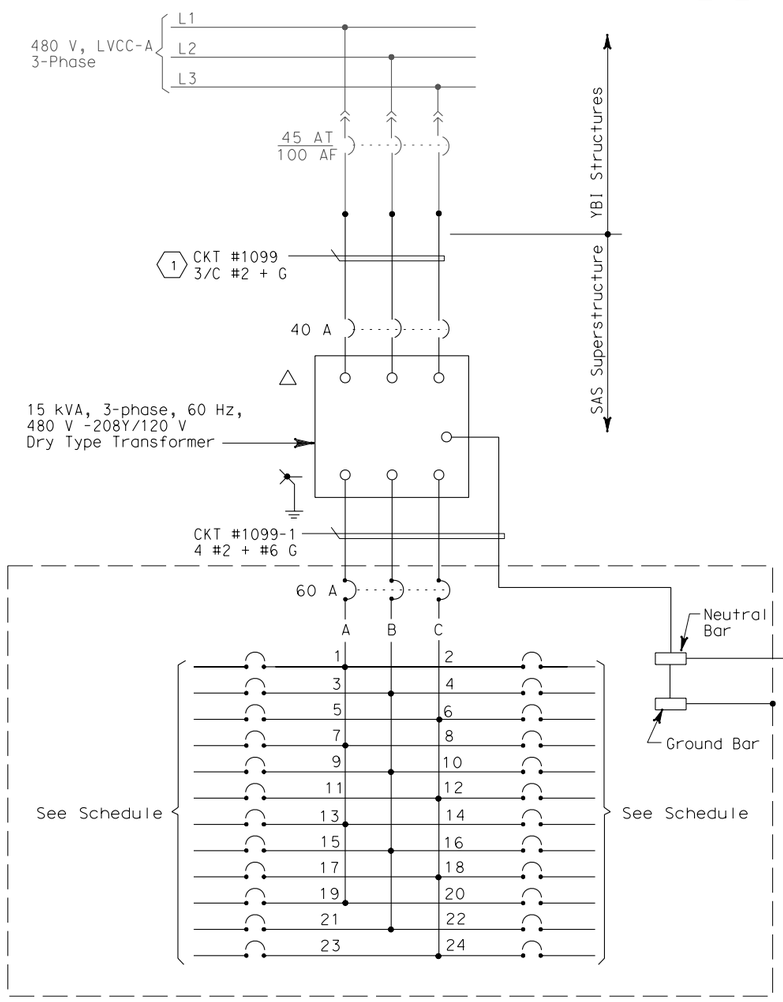


## NOTES:

1. The Contractor shall provide nameplates and circuit schedules as shown.
2. Install transformer/panelboard inside a PB-8A enclosure (fiberglass) to be sized by the Contractor.
3. References:
   - For circuit and conduit/cable tray schedules, see sheets starting at E-401.
   - For pull box schedule, see sheet E-83.
   - For crossbeam lighting plan, see sheet E-119.

## SHEET NOTES:

1. The Contractor shall extend and coil 5 meters of cable in manhole 25. All cables shall be tagged with circuit numbers as shown. For location of manhole 25, see sheet E-11.

| REVISED BY | DATE REVISED |
|---|---|
| EJL | 2/04 |

| CALCULATED/DESIGNED BY | DATE 08/01 |
|---|---|
| JP | 11/01 |
| CHECKED BY | BL |

DESIGN OVERSIGHT
BEHZAD GOLEMOHAMMADI

STATE OF CALIFORNIA - DEPARTMENT OF TRANSPORTATION
Caltrans

REGISTERED PROFESSIONAL ENGINEER S. A. ESTOQUE, JR. No. E-10151 Exp. 12/31/2008 ELECTRICAL STATE OF CALIFORNIA

FOR REVISION ONLY

| REQUEST FOR INFORMATION NOT ADDRESSED IN THIS CCO REMAIN IN FORCE | | | | | |
|---|---|---|---|---|---|
| △1 | 03/04/08 | BARRIER MODIFICATIONS | JS BM | RG SE | 44 |
| MARK | DATE | DESCRIPTIONS | BY | CH'D | CCO# |
| REVISIONS | | | | | |

CONTRACT CHANGE ORDER NO. _____
SHEET _____ OF _____

THIS PLAN IS ACCURATE FOR ELECTRICAL WORK ONLY.

# DETAILS
## SAS SUPERSTRUCTURE ROADWAY WESTBOUND PANEL UP-108 SCHEDULE
NO SCALE

E-63

LAST REVISION 00-00-00
DATE PLOTTED => 5/22/2008
TIME PLOTTED => 10:40:13 AM

FOR REDUCED PLANS ORIGINAL SCALE IS IN MILLIMETERS 0 20 40 60 80

DGN FILE =>T:\13103\MS\pse\SAS Struc\CCO\SAS CCO44\04-0120f1_0130R01.dgn
USERNAME =>llorico

CU 04251 EA 0120F1